Workflow

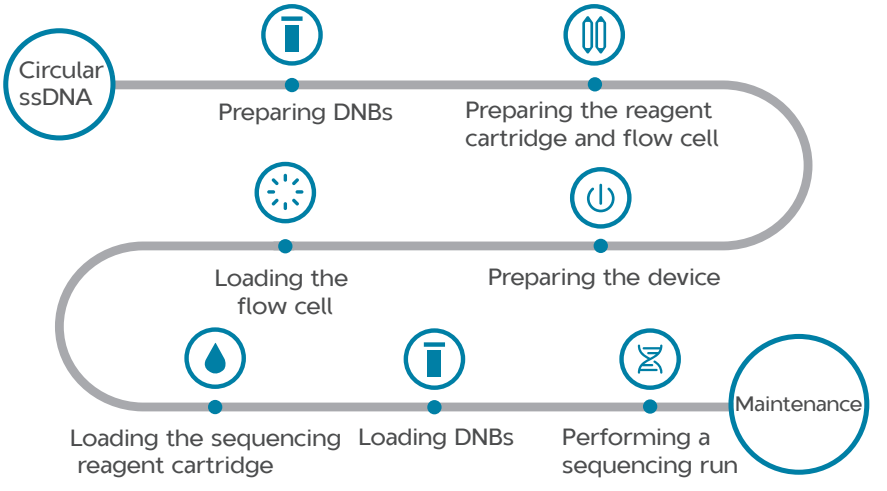

- Chemicals in reagents and waste might cause personal injury through contact with the skin, eyes, or mucosa. Follow the safety standards of your laboratory and wear protective equipment (such as a laboratory coat, protective glasses, mask, gloves, and shoe covers) when using the device.
- If you accidentally splash reagents or waste liquids on the skin or into eyes, immediately flush the affected area with large amounts of water, and then seek medical aid.
- When disposing of expired reagents, waste liquids, waste DNBs, and consumables, comply with local regulations.

Preparing DNBs

It is recommended to use the library preparation system or reagent kit of the manufacturer to prepare DNBs. For details, refer to the relevant reagent kit user manual.

Preparing the reagent cartridge and flow cell

CAUTION
- Use only the reagent cartridge and flow cell of the manufacturer for the sequencing process. You can purchase them as needed from the authorized sales representatives.
- If the sequencing reagent cartridge is not used immediately, store the cartridge at appropriate temperatures as required. Thaw the cartridge thoroughly before performing sequencing.

Reagent cartridge and sequencing flow cell

Remove the sequencing reagent cartridge from storage and prepare it for sequencing. For details, refer to relevant reagent kit user manual.

After preparing the sequencing reagent cartridge, place it at 2 °C to 8 °C (36 °F to 46 °F).

If the sequencing reagent cartridge is not used immediately, store the cartridge at appropriate temperatures as required. Thaw the cartridge thoroughly before performing a sequencing run.

Cleaning cartridge and washing flow cell

Cleaning cartridges are delivered with the device for wash procedures. A used flow cell without physical damage can be used as washing flow cell.

About how to prepare the cleaning cartridge, refer to *Cleaning cartridge and external cleaning module introduction on Page 52*.

About how to perform a wash manually, refer to *Regular wash on Page 52*.

Preparing the device

Powering the device on

Perform the following steps:

1. Connect one end of the power cord to the power port of the device, and the other end to the mains supply.
2. (Optional) If a UPS is prepared, connect the one end of the UPS power cord to the device, and the other end to the mains supply.

3. Turn the power switch of the device to the | position. After you power the device on, self-test begins.

Logging in to the control software

You can perform the sequencing and wash procedures only after you log in to the control software.

Perform the following steps:

1. Power the device on.
2. Log in to the computer with the password that is provided by the manufacturer.
3. Select in the main interface.
4. Log in to the control software with the user name and password.

Performing pre-run checks

Before each sequencing run, perform the following checks:

- Check whether the remaining space of storage drive is greater than 4.6 TB. If the remaining space is insufficient, clear history data according to *Reviewing parameters on Page 42* .
- Check the waste container, and solve the problem before sequencing.
  1) If the waste level reaches 80% of the maximum volume of the waste container, empty the waste container.

     For details, refer to *Maintaining the waste container on Page 56* .
  2) If the waste container icon turns to , empty the waste container.

     For details, refer to *Maintaining the waste container on Page 56* .
  3) If the float of the waste level sensor is not properly placed at the lower position of the waste container, clean and move the sensor to the lower position.
  4) If any problem occurs other than those mentioned above, restart the sequencer control software.
  5) If the problem persists, contact CG Technical Support.
- Check whether the environmental temperature and humidity meet the requirements mentioned in *Device specifications on Page 61*, and ensure that the temperature fluctuates within the specified range throughout the sequencing, and the humidity is constant.

Performing an auto wash

Before each sequencing run, it is required to perform an auto wash.

For details, refer to *Auto wash on Page 51.*

Loading the flow cell

Cleaning the flow cell satge

The canned air duster can be replaced by a clean cloth moistened with 75% ethanol to remove dust in the following steps.

Perform the following steps:

1. Open the flow cell compartment door.
2. Press both sides of the flow cell, and press the flow cell attachment button with the other hand.
3. After the vacuum is released, remove the flow cell from the stage.
4. Use a canned air duster to remove the dust on the flow cell stage and the back of the flow cell.

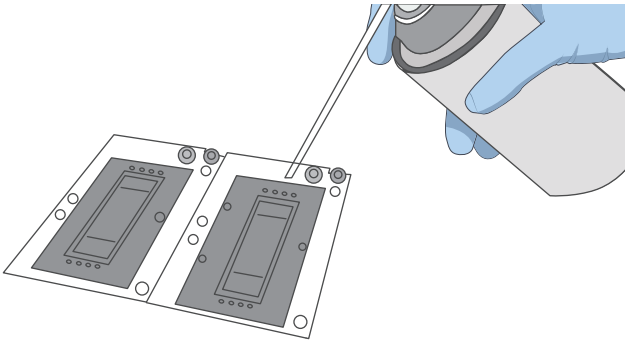

Figure 11 Cleaning the flow cell stage

If there are impurities on the stage surface, gently wipe the surface with wet dust-free paper to ensure that the flow cell can be held properly.

Loding new flow cell

Perform the following steps:

1. Take out a new flow cell.

2. There are two alignment holes on the left side and one hole on the right side. The label is on the right. Hold the edge of the flow cell with both hands.

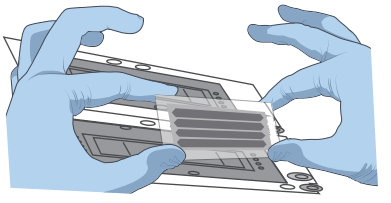

Figure 12 Loading the flow cell

3. Align the holes on the flow cell with the locating pins on the flow cell stage. Gently slide the flow cell at an angle of 45 degrees to the upper left corner to keep the flow cell aligned with the pin.
4. Press the flow cell attachment button. Press the left and right sides of the flow cell on the stage at the same time to ensure that the flow cell is properly seated on the stage.

   The flow cell is fragile, please operate with care.

5. Use a canned air duster to remove the dust on the flow cell surface and close the flow cell compartment door.

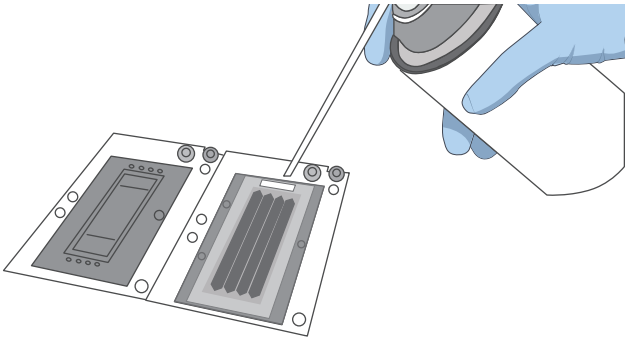

Figure 13 Cleaning the flow cell

WARNING If the flow cell accidentally drops to the floor and breaks, handle with care in case of personal injury.

CAUTION

- If the flow cell is not attached properly, use a canned air duster to blow off the dust on the flow cell stage and the back of the flow cell. If there are crystals on the surface of the stage, wipe it gently with a wet dust-free paper to ensure that the flow cell can be firmly attached to the stage.
- Do not move the flow cell once it is loaded. Otherwise, it might cause misalignment between the flow cell inlet, outlet and the gasket.

Loading the sequencing reagent cartridge

Preparing the reagent cartridge compartment

Perform the following steps:

1. Open the reagent compartment door and slowly remove the cleaning cartridge from the compartment.

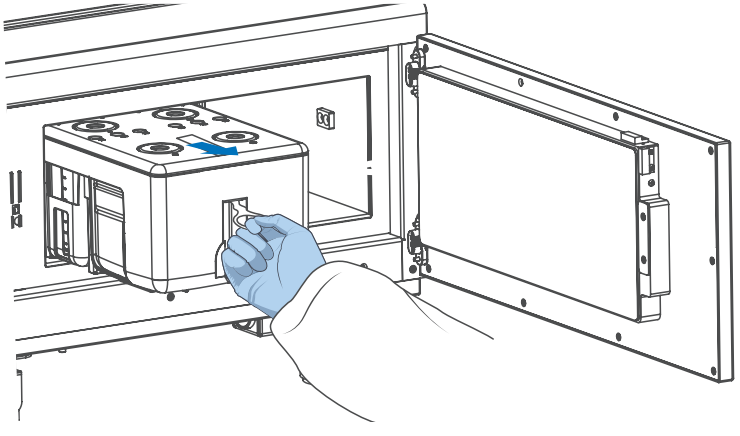

Figure 14 Removing cleaning cartridge

2. Moisten dust-free paper or a low-lint cloth with laboratory-grade water and use it to wipe the bottom and sides of the compartment to keep it clean and dry.

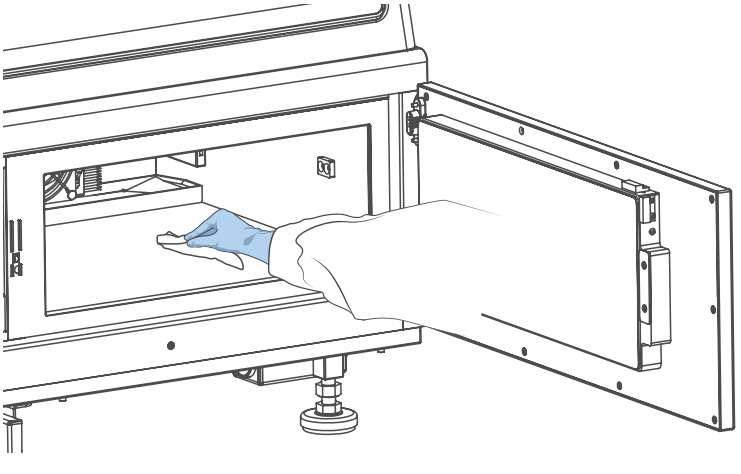

Figure 15 Cleaning reagent compartment

3. Hold the handle of a new sequencing reagent cartridge with one hand and place the other hand underneath for support.

Loding the reagent cartridge

Perform the following steps:

1. Slide the cartridge into the compartment by following the direction printed on the cover until it stops.

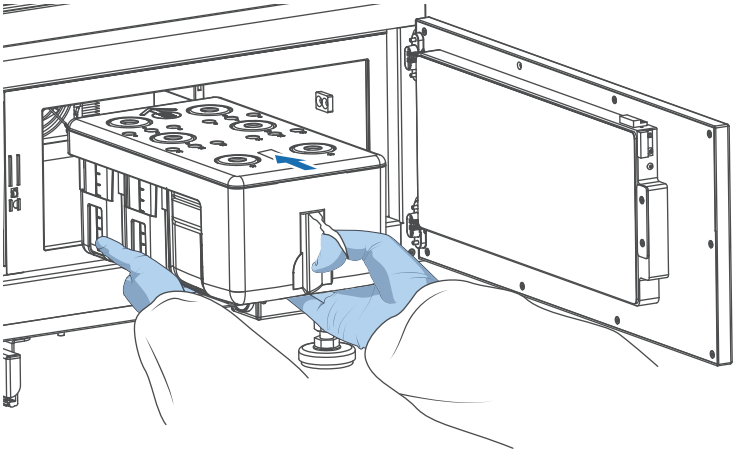

Figure 16 Loading the reagent cartridge

2. Ensure that the cartridge is in the correct position and close the reagent compartment door.
3. In the main interface, select **Sequence** to enter the inputting sequence information interface.

   Select **Back** to return to the main interface if needed.
4. System scans the flow cell ID and reagent cartridge ID automatically, and displays data on **Flow cell ID** and **Reagent cartridge ID** field.

   If scanning fails, select to input the ID manually.

   While inputting ID manually, ensure that ID starts with P1, P2 or P3. Only letters, numbers and middle bar can be inputted as ID. Otherwise, ID error appears and operation cannot continue.

Loading DNBs

1. Select the **DNB ID** box.
2. Select to scan the QR code on the tube.

   If there is no QR code on the tube, select to type the serial number of the tube with the on-screen keyboard or the physical keyboard.

3. Select a barcode range from the list on the right of DNB ID box.

   Select ⊕ or ⊖ to add or remove one line of DNB ID if needed.

4. Open the reagent compartment door and pull out the tube rack using the handle.

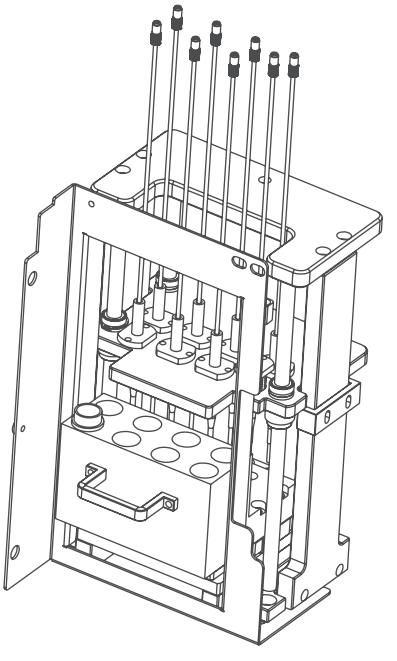

Figure 17 Sample module

5. Gently lift the sampling needle with one hand, remove the cleaning reagent tube with the other hand, load the DNB tube according to the signs. Slowly lower the sampling needle until the tip reaches the bottom of the tube.
6. Select a sequencing recipe from the **Recipe** list.

   Select **Customize** to customize the cycle, barcode, dark reaction and other parameters if needed.

   DNB loading and **Auto wash** are enabled by default.

   For detailed operation of auto wash, refer to *Auto wash on Page 51* .

7. Select **Next**.

Reviewing parameters

To ensure sequencing quality, when read1 and read2 sequencing are completed, the sequencer will automatically perform one more cycle for correction. For example, for PE150 dual barcode sequencing, read1 length is 150, read2 length is 150, barcode read length is 10 and dual barcode read length is 10, plus 1 correction cycle for read1 and 1 correction cycle for read2 (barcode does not require correction). The total cycle number of this sequencing is 322.

Carefully check each item in the review interface, and do one of the following:

- If not all parameters are correct, select **Back** to return to the previous interface and reset.
- If all parameters are correct, select **Start**. The software automatically checks the available storage drive space:
  - If the storage space is sufficient, a confirmation dialog box appears. Select **Yes** to start a sequencing run.

    Once sequencing has started, immediately open the flow cell compartment door to inspect the flow cells, and to ensure that DNBs or reagents are flowing through the flow cell. If not, solve the problems before you restart sequencing. In the main interface, select **Sequence** > **Recipe** > **Customize** to set up parameters.
  - If the storage space is insufficient, perform the following steps:
    a. In the prompted dialog box, select the data that you want to delete and select **Clear history data**.
    b. When turns green, select **Back** to return to the parameter review interface, and then select **Start**.

Performing sequencing run

CAUTION

- Do not bump, move, vibrate, or impact the device during sequencing. Otherwise, sequencing results might be inaccurate.
- If malfunctions related to fluidics lines (for example, bubbles) occur during sequencing, solve the problems before you restart sequencing. For details, refer to *Troubleshooting on Page 58.*
- Pay special attention to the LED status bar or the on-screen instructions. If errors occur, troubleshoot the problem by following the instructions and this guide. If errors persist, contact CG Technical Support.

The sequencing interface displays real-time sequencing progress, and you can check sequencing parameters as described in the following table during the run.

The following table describes the function of each item in the interface:

Table 1 Item description for the sequencing interface

Item	Description
Time remaining	Shows the remaining time for sequencing
Phase	Shows the current phase of sequencing.
Step	Shows the current step and total sequencing steps.
Cycle	Shows the current read length and total read length of sequencing.
QC type	You can select a QC value graph from the QC type list to assess the sequencing quality.
Lane	Shows the serial number of the lane that is being imaged, and the total number of flow cell lanes.
Row	Shows the serial number of the row that is being imaged, and the total number of flow cell rows.
Column	Shows the column of the flow cell lane that is being imaged, and the total columns.
	Select to pause sequencing.
	Select to resume sequencing.
	Select to stop sequencing.
	After imaging of the first cycle, when the sequencing is paused, you can select this button to move up the needles. Open the reagent compartment and take out the sequencing reagent cartridge.
	After imaging of the first base, select this button to open the first base report. After sequencing, select this button to view simple reports.
	Select to lift the needles after pausing the sequencing.
	Select to open the Review interface, and you can check sequencing information.

Performing a regular wash

After the sequencing run, perform a regular wash within 24 hours.

For details, refer to *Regular wash on Page 52.*

Disposing of the sequencing reagent cartridge and flow cell

WARNING If the flow cell accidentally drops to the floor and breaks, handle with care in case of personal injury.

Perform the following steps:

1. Wear protective equipment.
2. Open the flow cell compartment and remove the flow cell:
   1) Hold the flow cell by the edges with one hand to prevent the flow cell from falling into the device, and to avoid damage to the flow cell.
   2) Press the flow cell attachment button with the other hand to release the flow cell. Remove the flow cell.
3. Clean the liquid inlet/outlet field and sealing gasket of flow cell stage.
   1) Collect the sequencing flow cell, cover the sealing gasket at the liquid inlet/outlet with a clean cloth moistened with 75% ethanol. Reagent seeping from sealing gasket will be attached by the dust-free cloth, let it air-dry.

      For introduction of the position of liquid inlet/outlet and sealing gasket, refer to *Introduction of flow cell stage and flow cell on Page 49.*
   2) Collect the washing flow cell, wipe the sealing gasket at the liquid inlet/outlet hole with a clean cloth moistened with 75% ethanol. Reagent seeping from sealing gasket will be attached by the cloth, let it air-dry.
4. Open the reagent compartment door, pull out the sequencing reagent cartridge by using the pull ring and remove the cartridge. Move up the base, and remove the tube.
5. Empty the remaining solution in the sequencing reagent cartridge and tube into an appropriate waste container.
6. Dispose of the tube, flow cell, and sequencing reagent cartridge in accordance with local regulations and safety standards of your laboratory.

(Optional) Powering the device off

CAUTION

- Power the device off and disconnect the power cord if you do not plan to use the device for a long time.
- Before you power the device off , ensure that the sequencing run and wash are completed, the control software is shut down, and the flow cell compartment door is closed. Failure to do so might damage the control software.

Perform the following steps:

1. Select and select **Shut down**. In the pop-up dialog box, select **Shut down**.
2. Turn the power switch to the position.
3. Disconnect the power cord from the mains supply socket or UPS.

---This page is intentionally left blank.---

05

Device maintenance

This chapter describes maintenance procedures of the device and its parts. Perform maintenance regularly to ensure that the device runs smoothly.

DANGER

- Ensure that the device is powered off before cleaning or disinfecting. Failure to do so might cause personal injury.
- Do not spray the wash solutions or disinfectants into the device during cleaning or disinfecting. Doing so might damage the device.

WARNING

- It is not recommended to use other disinfectants or wash solutions except for those that are mentioned in this guide. Other solutions are not verified for use and their effects to the device are unknown.
- If you have questions about the compatibility of wash solutions, contact CG Technical Support.
- Wear a laboratory coat, a mask, and gloves before maintenance.

Service plan

A free preventive maintenance service is provided in the first year during the warranty period. For the purchase of additional services, contact CG Technical Support.

Daily maintenance

Maintaining the power cord

Perform the following steps:

1. Regularly check whether the power cord and cables are connected correctly and in good condition. Contact CG Technical Support if new cables are required.
2. Check whether the area around the power supply is dry without water.

Checking and cleaning the cooling fan

Perform the following steps:

1. Remove the dust on the ventilation holes with a small brush. Ensure that the device can ventilate normally.
2. Check whether the cooling fan operates normally. If not, contact CG Technical Support to replace the fan.

Flow cell stage and flow cell maintenance

Introduction of flow cell stage and flow cell

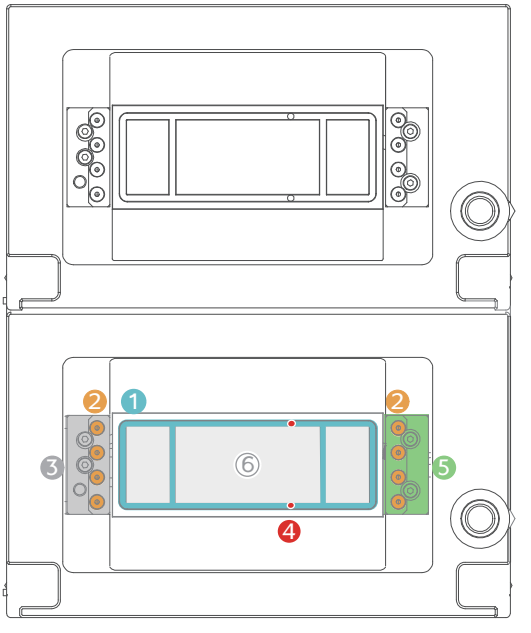

Figure 18 Flow cell stage

No.	Name	No.	Name
1	Vacuum suction tank	4	Vacuum suction hole
2	Sealing gasket	5	Liquid outlet
3	Liquid inlet	6	Stage

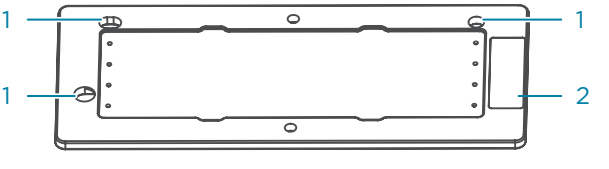

Figure 19 The front view of flow cell

No.	Name
1	Alignment hole
2	QR code

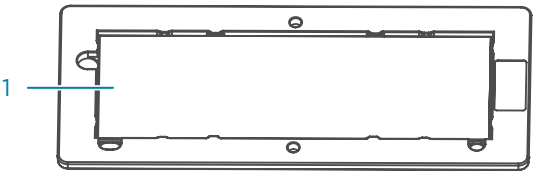

Figure 20 The back view of flow cell

No.	Name
1	Silicon chip

Cleaning the flow cell stage and flow cell

Perform cleaning and maintenance for the flow cell stage before each use. Failure to do so might affect the attachment of flow cell to the chuck.

- Wear protective gloves when cleaning the flow cell stage. Dust, lint, or other particulate matters can affect flow cell attachment and imaging.
- Ensure that the flow cell does not fall off when cleaning it with a canned air duster.

Prepare the following tools and solutions to clean the flow cell stage:

- Washing flow cell
- Clean cloth
- 75 % ethanol
- Canned air duster.

Perform the following steps:

1. Check if there is dust or debris on the back of cleaning flow cell or in the surface of flow cell stage. If yes, use the head of pipette gun to remove them.
2. If there is dust or debris on the back of cleaning flow cell, wipe the silicon chip on the back of cleaning flow cell with a clean cloth moistened with 75% ethanol, and then let it air-dry.
3. Wipe the flow cell stage with a clean cloth moistened with 75% ethanol, and then let it air-dry.

Do not wipe the vacuum inlet and vacuum attachment slot to prevent ethanol from entering the holes and damaging the device.

5. Use a canned air duster to carefully blow particulate matter and dust from the silicon chip on the back of flow cell and flow cell stage until there is no visible dust or debris.
6. Press the flow cell attachment button on the flow cell stage.
7. Place the flow cell on the flow cell stage. Ensure that the front side of flow cell is facing upward, and the QR code is on the right. Press the edges of the flow cell with your hand to ensure that it is securely seated.

Cleaning sealing gasket

After each sequencing run or regular wash, perform the following steps:

1. After sequencing, collect the sequencing flow cell, cover the sealing gasket at the liquid inlet/outlet hole with a clean cloth moistened with 75% ethanol. Reagent seeping from sealing gasket will be attached by the cloth, let it air-dry.
2. After regular wash, collect the washing flow cell, wipe the sealing gasket at the liquid inlet/outlet hole with a clean cloth moistened with 75% ethanol. Reagent seeping from sealing gasket will be attached by the cloth, let it air-dry.

Sequencer maintenance

Wash

Wash type introduction

There are three different wash types based on sequencer conditions:

Table 2 Wash type introduction

Wash type	Washing reagent	Description
Auto wash	In external cleaning cartridge, add 80 mL NaOH and laboratory-grade water into respective hole. For details, refer to Cleaning cartridge and external cleaning module introduction on Page *52*.	Auto wash will be performed automatically after sequencing.

Wash type	Washing reagent	Description
Regular wash	Laboratory-grade water	If the device is not used for over 12 hours, perform a regular wash before sequencing.
Maintenance wash	In external cleaning cartridge, add WB1, 0.1 M NaOH and laboratory-grade water into respective reagent bottle according to signs. For details, refer to Cleaning cartridge and external cleaning module introduction on Page *52*.	After each sequencing run, maintenance wash starts to perform automatically.

You can use laboratory-grade water such as 18 Megohm (MΩ) water, Milli-Q water, Super-Q water, or similar molecular biology-grade water.

Cleaning cartridge and external cleaning module introduction

Cleaning Cartridge

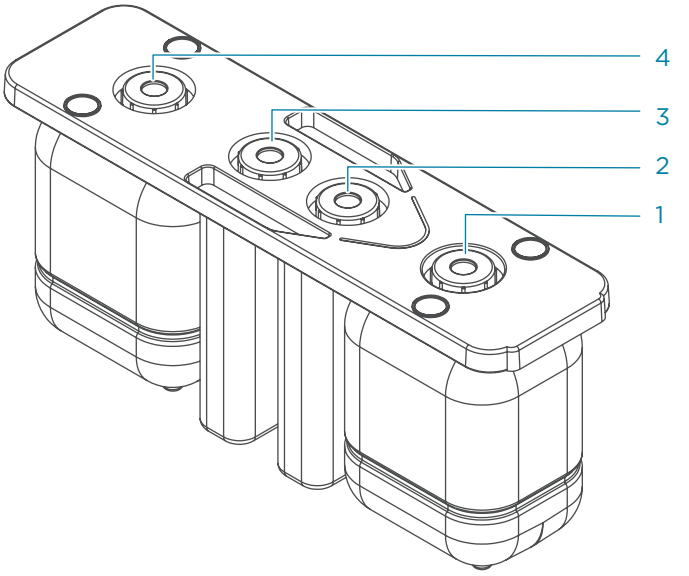

No	Description
1	Hole 1. Loading WB1.
2	Hole 2. Loading laboratory water.
3	Hole 3. Loading 0.1 M NaOH.

No	Description
4	Hole 4. Loading WB1.

External cleaning module

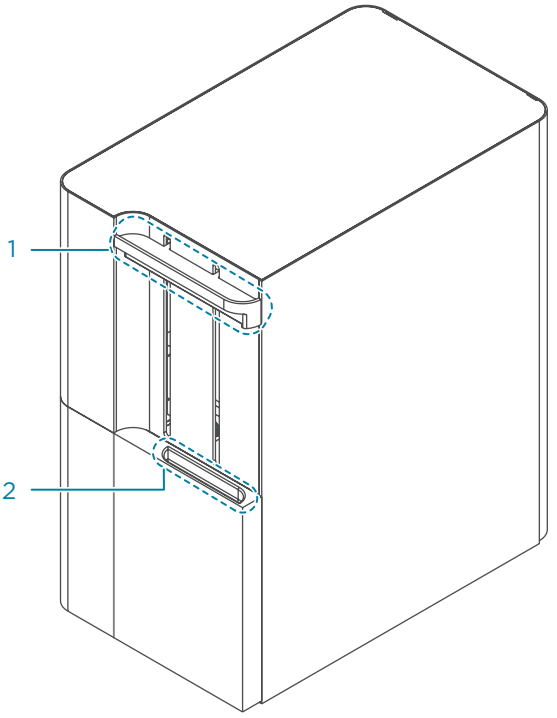

No	Name	Description
1	Button	Press down to open the door
2	Handle	Pull out the door by using the handle.

Performing an auto wash

Auto wash is turned on by default, the device will perform an auto wash automatically after each run.

If auto wash is required to turn off while checking problems, you may cancel the **Auto wash** manually in inputting sequence information interface and perform a maintenance wash immediately after checking. For details of maintenance wash, refer to *Maintenance wash on Page 52.*

Perform the following steps:

1. In cleaning cartridge, add WB1, 0.5 M NaOH and laboratory water into respective bottle. For details, refer to *Cleaning Cartridge on Page 52.*
2. Select **Auto wash**.

When you perform the wash, observe the status of the washing flow cell. If many bubbles are observed, stop the wash, replace the flow cell, and re-start the wash. If no bubbles are observed, continue the wash.

Performing a regular wash

Choose washing frequency according to the using frequency and sequencing type.

Perform the following steps:

1. Before sequencing, log in to the software, and then select **Wash** in the main interface. Or after sequencing, select **Wash** in the following interface.
2. Select **Regular** from the **Wash type** list.
3. Preparing DNBs, cleaning cartridge and washing flow cell. For details, refer to *Preparing DNBs on Page 34* and *Cleaning cartridge and washing flow cell on Page 35.*
4. According to the signs in the interface, place the washing flow cell, DNB tubes and empty reagent cartridge. Put the cleaning cartridge in the external cleaning module. For details, refer to *Cleaning cartridge and external cleaning module introduction on Page 52*. Close all the compartment doors.
5. Select **Wash,** fluidic selfcheck starts by default. If the fluidic selfcheck succeeds, it starts to wash automatically.
   - Select ▯▯ to pause the washing, and click again to resume washing.
   - Select ■ and click **Yes** in the prompted window to stop washing.

   If fluidic selfcheck fails, replace flow cell to do fluidic selfcheck again. If the problem persists after several attempts, contact CG Technical Support.
6. Once washing has started, immediately open the flow cell compartment door to inspect the flow cells, and to ensure that DNBs or reagents are flowing through the flow cell.
7. When washing has completed, remove washing flow cell, DNB tubes and empty reagent cartridge accordingly. Take out cleaning cartridge from external cleaning module.
8. Select **Back** to return to the main interface.
9. Store the washing flow cell at room temperature.

   It is recommended to dispose of washing flow cell according to local regulations and safety standards of your laboratory after it has being used 10 times in a row.
10. Dispose of DNB tubes according to local regulations and safety standards of your laboratory.
11. Wash cleaning cartridge with laboratory-grade water, let it air-dry.

It is recommended to dispose of cleaning cartridge according to local regulations and safety standards of your laboratory after it has being used 20 times in a row.

Performing a maintenance wash

Perform the following steps:

1. Before sequencing, log into the software, and then select **Wash** in the main interface. Or after sequencing, select **Wash** in the following interface.
2. Select **Maintenance** from the **Wash type** list.
3. Preparing DNBs, cleaning cartridge and washing flow cell. For details, refer to *Preparing DNBs on Page 34* and *Cleaning cartridge and washing flow cell on Page 35.*
4. According to the signs in the interface, place the cleaning flow cell, DNB tubes and empty reagent cartridge. Place the external cleaning cartridge in the external cleaning module. For details, refer to *Cleaning cartridge and external cleaning module introduction on Page 52*. Close all the compartment doors.
5. Select **Wash**, fluidic selfcheck starts by default. If the fluidic selfcheck succeeds, it starts to wash automatically.
   - Select ▯▯ to pause the washing, and click again to recover washing.
   - Select ■ and click **Yes** in the prompted window to end washing.

   If fluidic selfcheck fails, replace flow cell to do fluidic selfcheck again. If the problem persists after several attempts, contact CG Technical Support.
6. Once washing has started, immediately open the flow cell compartment door to inspect the flow cells, and to ensure that DNBs or reagents are flowing through the flow cell.
7. When washing has completed, remove washing flow cell, DNB tubes and empty reagent cartridge accordingly. Take out cleaning cartridge from external cleaning module.
8. Select **Back** to return to the main interface.
9. Store the washing flow cell at room temperature.

   It is recommended to use the last-used flow cell as washing flow cell, dispose of the washing flow cell according to local regulations and safety standards of your laboratory after it has being used 3 times in a row.
10. Dispose of DNB tubes according to local regulations and safety standards of your laboratory.
11. Wash cleaning cartridge with laboratory-grade water, and let it air-dry.

It is recommended to dispose of the cleaning cartridge according to local regulations and safety standards of your laboratory after it has being used 20 times in a row.

Reusing the cleaning cartridge

A sequencer cleaning cartridge and washing flow cell are provided together with the device.

Rinse the sequencer cleaning cartridge before refilling with washing reagents. Replace a sequencer cleaning cartridge after it has been used 20 times or every 6 months.

CAUTION

- While reusing the cleaning cartridges, it is recommended that not to mix various types of sequencer cleaning cartridges. For example, the cartridge used for filling NaOH in the previous cleaning procedure will be used to fill NaOH again in the current cleaning procedure.
- It is recommended that you do not use the sequencing reagent cartridge as sequencer cleaning cartridge.

Weekly maintenance

WARNING Wear a laboratory coat, a mask, and gloves before performing the following steps.

Clearing the historical data in the storage drive

Check the storage drive space and timely back up the historical data with the peripheral storage devices.

Maintaining the power supply

Perform the following steps:

1. Periodically check whether the power cord and cables are connected correctly and in good condition. Contact CG Technical Support if new cables are required.
2. Check whether the area around the power supply is dry and free of moisture.

Maintaining the waste container

The waste container is connected to the device through tubes. To avoid liquid leakage and biological hazard, monitor the waste container status frequently and empty it in time. Clean and disinfect the waste container after it is emptied according to the following instructions.

Empty the waste container when either of the following conditions is met:

- The waste level reaches 80% of the maximum volume before sequencing
- The waste container icon turns to during sequencing

Perform the following steps:

1. Remove the lid without tubes from the waste container.
2. Pour the waste into an appropriate waste container, and dispose of the waste according to local regulations and safety standards of your laboratory.
3. Add sufficient laboratory-grade water into the waste container, attach the lid back onto the container if necessary, and gently swirl it until all inner walls are cleaned.
4. Pour the laboratory-grade water into an appropriate waste container.

   If necessary, repeat step 4-5.
5. Clean the surface and opening of the waste container with a 75% ethanol wipe. Ensure that no waste remains in the container.
6. Attach the lid back onto the waste container.

Monthly maintenance

Maintaining the device

The low-lint cloth should keep moist without droplets.

Perform the following steps:

1. Power the device off.
2. Wipe the surface and the auto-sliding screen of the device with a low-lint cloth moistened with 75% ethanol. Ensure that the surface is free of samples, and reagents, blood, or potential biological contaminants.

Checking and cleaning the cooling fan

Perform the following steps:

1. Remove the dust on the ventilation holes with a small brush. Ensure that the device can ventilate normally.
2. Check whether the cooling fan operates normally. If not, contact CG Technical Support to replace the fan.

Annual maintenance

It is recommended to annually calibrate and maintain critical components, such as the power of the laser. For details about the service plan and preventative maintenance (PM), contact CG Technical Support.

Maintaining the software

If necessary, contact CG Technical Support to update and maintain the software.

FAQs

If malfunctions occur during operation, the device alarms or a message is displayed on the screen. Follow the prompts to troubleshoot and solve the issue.

The following table lists some of the problems and possible solutions. If the problem persists after you try the recommended actions, contact CG Technical Support.

Problem	Possible cause	Recommended action
After turning the power switch to ▌ position, I cannot turn on the device.	• The device is not connected to the mains supply or UPS • Fuses blew.	1. Check whether the device is connected to the mains supply or UPS. 2. Check whether the fuses blew.
Error messages appear when the control software runs.	• The parameters are not set properly. • Errors occur when the software communicates with hardware.	1. Perform a check in the maintenance interface. Check the record of the hardware that fails the check. 2. Check error messages in the log, and solve the problem according to onscreen instructions. 3. Restart the device.
Flow cell is unable to be attached to the flow call stage	• Attachment button on flow cell is not pressed. • There is waste on flow cell stage.	1. Check if attachment button is pressed. 2. Check if there is any dust or waste on flow cell stage, clean the flow cell stage according to

Problem	Possible cause	Recommended action
Initialization failure messages appear on software interface or operation time exceeds.	• Reagent compartment door is unclosed. • Switch or controller is damaged.	Close reagent compartment door, perform self-check one more time.
Temperature error message and warning appears in the sequencing interface.	• The temperature exceeds the preset limits. • Temperature sensor error.	Record the warning and logs of this run and contact CG Technical Support.
Bubbles exist inside the flow cell after the sequencing ends.	• The flow cell is not installed properly. • The flow cell does not connected to the flow cell stage tightly. • Gas tightness of tube line does not meet the standard. • Bubbles exsist inside the reagent cartridge.	1. Install cleaning flow cell and operate a wash, and check if there is a string of bubbles flow through the flow cell. 2. Reinstall the sealing gasket or replace with a new gasket. Then perform a maintenance wash to check if the liquid path is normal.
Waste level sensor alarms.	• The waste level exceeds the preset limits. • The level sensor is not installed properly. • The level sensor is damaged.	Check if the level sensor is stuck or installed unproperly.
A large amount of liquids remain in the flow cell after a wash ends.	• The flow cell is leaking, • Reagent needle is loose.	1. Check if the surface of flow cell is broken. If yes, replace with a new flow cell and place it on the flow cell stage after cleaning the surface. 2. Perform a regular wash, check if there are leftover liquids inside the flow cell.

Storage and transportation

- Keep the device according to the environment requirements in this guide.
- If you want to move or transport the device, contact CG Technical Support.

Disposal of the device

The service life of this device is seven years, which is determined by the simulated service life evaluation method. For the date of manufacture, refer to the label on the device. Perform the maintenance according to the requirements mentioned in this guide. Dispose of the end-of-life device according to local regulations. However, if it is confirmed that the device is still functioning safely and effectively after maintenance, continue to use the device.

Device specifications

CAUTION

- The maximum sound pressure level is measured based on the distance between the position where the device operator stands during normal operation and any position which is one meter from the device and has the maximum sound pressure level.
- Because the temperature and humidity fluctuations influence the accuracy of the experimental results, it is recommended that you install an air conditioning system and a humidifier or dehumidifier in the laboratory to maintain the temperature and humidity.

Item	Description
Laser classification of the device	Class 1 laser product
Emission classification of EMC	Class A
Dimensions	1086 mm × 756 mm × 710 mm (42.8 inches × 29.8 inches × 28 inches)
Net weight	Approximately 220 kg (485 lb.)
Touch screen	• Type: LCD • Size: 19.5 inches • Resolution: 1920 × 1080 pixels
Power	• Supply voltage: 100 V to 240 V~(10% tolerance) • Transient over-voltage category: Ⅱ • Frequency: 50/60 Hz • Rated power: 1200 VA
Fuse specification	T16AH250V
Maximum sound pressure level	75 dB(A)
Degrees of protection provided by enclosures (IP Code)	IPX0

Item	Description
Operating environment requirements	• Temperature: 19 °C to 30 °C (66 °F to 86 °F) indoor used only • Relative humidity: 20% to 70%, non-condensing • Atmospheric pressure: 70 kPa to 106 kPa • Maximum altitude: 3000 m (9843 ft)
Transportation/Storage environment requirements	• Temperature: -20 °C to 50 °C (-4 °F to 122 °F) • Relative humidity: 15% to 90%, non-condensing • Atmospheric pressure: 70 kPa to 106 kPa • Maximum altitude: 3000 m (9843 ft)
Accompanying items	Refer to the packing list

Compliance information

Item	Standard
Safety requirements	• UL 61010-1 Safety Requirements For Electrical Equipment For Measurement, Control, And Laboratory Use - Part 1: General Requirements • CAN/CSA-C22.2 NO. 61010-1-12 + GI1 + GI2 (R2017) + A1 Safety Requirements For Electrical Equipment For Measurement, Control, And Laboratory Use - Part 1: General Requirements (Tri-National Standard, With UL 61010-1 And ANSI/ISA-61010-1 (82.02.01) • UL 61010-2-010 Safety Requirements For Electrical Equipment For Measurement, Control And Laboratory Use - Part 2-010: Particular Requirements For Laboratory Equipment For The Heating Of Materials • CSA C22.2 No. 61010-2-010 Safety Requirements For Electrical Equipment For Measurement, Control And Laboratory Use - Part 2-010: Particular Requirements For Laboratory Equipment For The Heating Of Materials (Adopted IEC 61010-2-010:2019, Fourth Edition, 2019-02, With Canadian Deviations) • UL 61010-2-081 Safety Requirements For Electrical Equipment For Measurement, Control And Laboratory Use - Part 2-081: Particular Requirements For Automatic And Semi-Automatic Laboratory Equipment For Analysis And Other Purposes • CSA C22.2 No. 61010-2-081 Safety Requirements For Electrical Equipment For Measurement. Control, And Laboratory Use - Part 2-081: Particular Requirements For Automatic And Semi-Automatic Laboratory Equipment For Analysis And Other Purposes (Adopted IEC 61010-2-081:2019, Third Edition, 2019-02, With Canadian Deviations)

Item	Standard
	• IEC 60825-1 Safety of laser product part 1: equipment classification and requirements • DS/EN 60825-1:2014/A11:2021 Safety Of Laser Products - Part 1: Equipment Classification And Requirements
Electromagnetic Compatibility (EMC)	FCC Part 15 B Electrical equipment for measurement, control and laboratory use – EMC requirements – Part 1: General requirements
Radio Frequency IDentification (RFID)	FCC Part 15.247 Operation within the bands 902–928 MHz, 2400–2483.5 MHz, and 5725–5850 MHz.

Manufacturer information

Manufacturer	Complete Genomics, Inc.
Address	2904 Orchard Parkway San Jose, CA 95134
Technical support	Complete Genomics, Inc.
Technical support E-mail	US-TechSupport@mgi-tech.com
Customer service telephone	+1 (888) 811-9644
Website	www.completegenomics.com

---This page is intentionally left blank.---

Order information

Reserved for future use.

---This page is intentionally left blank.---

Acronyms and abbreviations

Item	Description
cPAS	Combinatorial Probe-anchor Synthesis
DNB	DNA Nanoball
EMC	Electromagnetic Compatibility
UDI	Unique Dual Index
UPS	Uninterruptible Power Supply

---This page is intentionally left blank.---

Index

B

Barcode settings 26

D

Export data 26

F

Flow cell compartment 18
- laser
  - Laser classification 61

L

Log interface 24

M

Main interface 21
Maintenance interface 25

N

Notification area 22

O

Operation area 22

P

Power switch 17

R

Reagent compartment 19

S

Status area 23
System settings interface 24

U

Upload 25

W

waste container 58

Part No.: H-020-000658-00

Electrical safety

DANGER

- Ensure that the device is properly grounded, and the grounding resistance meets the requirements. Failure to do so may result in altered experiment results, electric leakage, or even electric shock.
- Do not remove the device cover and expose the inner components. Otherwise, electric shock may be caused .

WARNING

Do not use the device in close proximity to sources of strong electromagnetic fields, such as unshielded sources of radiated emissions. Radiated signals may reduce the accuracy of the results.

CAUTION

- Before initial use of the device, assess the electromagnetic environment in which the device will be used.
- Ensure that the input voltage meets the device requirements.
- Ensure that the voltage of the power outlet in your laboratory or the UPS (if any) meets the voltage requirements before using the device. Failure to do so may damage the electrical components.
- Prepare the laboratory and power supply according to the instructions described in this guide.

FCC statement

This device complies with part 15 of the FCC Rules. Operation is subject to the following two conditions:

1. This device may not cause harmful interference, and
2. This device must accept any interference received, including interference that may cause undesired operation.

Any changes or modifications not expressly approved by the party responsible for compliance could void the user's authority to operate the equipment.

This equipment should be installed and operated with a minimum distance of 20 mm between the radiator and your body.

This equipment has been tested and found to comply with the limits for a Class B digital device, pursuant to Part 15 of the FCC Rules. These limits are designed to provide reasonable protection against harmful interference in a residential installation. This equipment generates, uses and can radiate radio frequency energy and, if not installed and used in accordance with the instructions, may cause harmful interference to radio communications. However, there is no guarantee that interference will not occur in a particular installation. If this equipment does cause harmful interference to radio or television reception, which can be determined by turning the equipment off and on, the user is encouraged to try to correct the interference by one or more of the following measures:

- Reorient or relocate the receiving antenna.
- Increase the separation between the equipment and receiver.
- Connect the equipment into an outlet on a circuit different from that to which the receiver is connected.
- Consult the dealer or an experienced radio/TV technician for help.

IC statement

This device complies with Industry Canada's licence-exempt RSSs. Operation is subject to the following two conditions:

1. This device may not cause interference; and
2. This device must accept any interference, including interference that may cause undesired operation of the device.

The distance between user and products should be no less than 20 cm.

Le présent appareil est conforme aux CNR d'Industrie Canada applicables aux appareils radio exempts de licence. L'exploitation est autorisée aux deux conditions suivantes:

1. l'appareil ne doit pas produire de brouillage, et
2. l'utilisateur de l'appareil doit accepter tout brouillage radioélectrique subi, même si le brouillage est susceptible d'en compromettre le fonctionnement.

La distance entre l'utilisateur et de produits ne devrait pas être inférieure à 20 cm.

Industry Canada ICES-003 Compliance:CAN ICES-3(B)/NMB-3(B)