TEST REPORT

Report No.:	BCTC2411224958-6E
Applicant:	Acer India PVT Limited
Product Name:	Tablet
Test Model:	Acer Iconia Tab iM10-22
Tested Date:	2024-11-14 to 2024-11-26
Issued Date:	2024-11-26

Shenzhen BCTC Testing Co., Ltd.

FCC ID: 2A94K-IM10-22

Product Name:	Tablet
Trademark:	acer
Model/Type reference:	Acer Iconia Tab iM10-22 Acer One T10-22L
Prepared For:	Acer India PVT Limited
Address:	Acer India PVT Limited, 6th Floor, Embassy Heights, No.13, Magrath Road, Bangalore, 560025, India
Manufacturer:	Acer India PVT Limited
Address:	Acer India PVT Limited, 6th Floor, Embassy Heights, No.13, Magrath Road, Bangalore, 560025, India
Prepared By:	Shenzhen BCTC Testing Co., Ltd.
Address:	1-2/F., Building B, Pengzhou Industrial Park, No.158, Fuyuan 1st Road, Zhancheng, Fuhai Subdistrict, Bao'an District, Shenzhen, Guangdong, China
Sample Received Date:	2024-11-14
Sample tested Date:	2024-11-14 to 2024-11-26
Issue Date:	2024-11-26
Report No.:	BCTC2411224958-6E
Test Standards:	FCC CFR Title 47 Part 2 FCC CFR Title 47 Part 22 FCC CFR Title 47 Part 27
Test Results:	PASS
Remark:	This is radio test report for 4G in US full bands.

Tested by:

Brave Zeng

Brave Zeng/ Project Handler

Approved by:

Zero Zhou/Reviewer

The test report is effective only with both signature and specialized stamp. This result(s) shown in this report refer only to the sample(s) tested. Without written approval of Shenzhen BCTC Testing Co., Ltd, this report can't be reproduced except in full. The tested sample(s) and the sample information are provided by the client.

Table Of Content

Test Report Declaration Page
1. Version 4
2. Test Summary 5
3. Measurement Uncertainty 6
4. Product Information And Test Setup 7
4.1 Product Information 7
4.2 Test Setup Configuration 7
4.2 Emission Designator 8
4.3 Description Operation Frequency 9
4.4 Test Mode 10
4.5 Support Equipment 12
4.6 Measurement Results Explanation Example 12
5. Test Facility And Test Instrument Used 13
5.1 Test Facility 13
5.2 Test Instrument Used 13
6. Spurious Radiated Emissions 15
6.1 Block Diagram Of Test Setup 15
6.2 Limit 16
6.3 Test procedure 17
6.4 Test Result 17
7. EUT Photographs 19
8. EUT Test Setup Photographs 20

(Note: N/A Means Not Applicable)

1. Version

Report No.	Issue Date	Description	Approved
BCTC2411224958-6E	2024-11-26	Original	Valid

2. Test Summary

The Product has been tested according to the following specifications:

No.	Test Parameter	Clause No.	Results
1	Spurious Emissions at Antenna Terminal	§22.917 (a), §27.53,	PASS
2	Spurious Radiation Emissions	§2.1051; §22.917; §27.53	PASS

Note: According to the following changes of the product, the adapter is added and the memory IC chip is added on the board
Therefore, the radiation stray test is only performed on the original report (BCTC2408633035-6E).

Original: 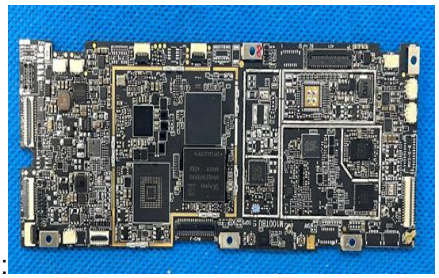 New 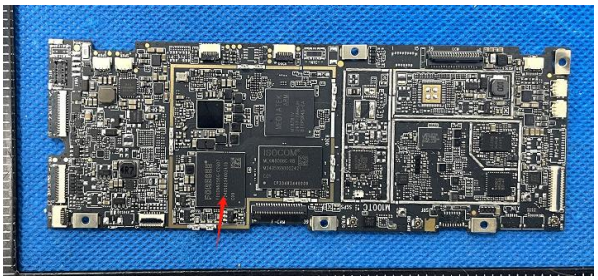

Note: According to the following changes in the original test report (BCTC2408633035-5E),
Update only test instruments, radiation spurious, EUT photos, etc.

3. Measurement Uncertainty

The reported uncertainty of measurement y ± U, where expended uncertainty U is based on a standard uncertainty multiplied by a coverage factor of k=2, providing a level of confidence of approximately 95 %.

No.	Item	Uncertainty
1	3m chamber Radiated spurious emission(30MHz-1GHz)	U=4.3dB
2	3m chamber Radiated spurious emission(9KHz-30MHz)	U=3.7dB
3	3m chamber Radiated spurious emission(1GHz-18GHz)	U=4.5dB
4	3m chamber Radiated spurious emission(18GHz-40GHz)	U=3.34dB
5	Conducted Emission (150kHz-30MHz)	U=3.20dB
6	Conducted Adjacent channel power	U=1.38dB
7	Conducted output power uncertainty Above 1G	U=1.576dB
8	Conducted output power uncertainty below 1G	U=1.28dB
9	humidity uncertainty	U=5.3%
10	Temperature uncertainty	U=0.59℃

4. Product Information And Test Setup

4.1 Product Information

Model/Type Reference:	Acer Iconia Tab iM10-22 Acer One T10-22L
Model Differences:	All the model are the same circuit and RF module, except model names.
Hardware Version:	N/A
Software Version:	N/A
Tx Frequency:	LTE Band 5: 824 MHz ~ 849 MHz LTE Band 41: 2455MHz~2655MHz
Rx Frequency:	LTE Band 5: 869 MHz ~ 894 MHz LTE Band 41: 2535MHz~2655MHz
Bandwidth:	LTE Band 5: 1.4MHz /3MHz /5MHz /10MHz LTE Band 41: 5MHz /10MHz /15MHz /20MHz
The Max RF Output Power (EIRP/ERP)	LTE Band 5: 23.41 dBm LTE Band 41: 24.61 dBm
99% Occupied Bandwidth:	LTE Band 5: 9M00G7D LTE Band 41: 18M0G7D
Type of Modulation:	QPSK/16QAM
Antenna Type:	Internal Antenna
Antenna Gain:	LTE Band 2: 1.86 dBi LTE Band 41: 2.14 dBi Remark: ☐ The antenna gain of the product comes from the antenna report provided by the customer, and the test data is affected by the customer information. ☒ The antenna gain of the product is provided by the customer, and the test data is affected by the customer information.
Connecting I/O Port(s):	Please refer to the User's Manual
Ratings:	DC 9V from adapter/DC 3.8V from battery
Adapter Information:	Model: 623022C-1 Input: 100-240V~50/60Hz 0.8A Max Type-C Output: 5.0V⎓3.0A, 9.0V⎓2.0A, 12.0V⎓1.5A 18.0W Max PPS: 3.3-5.9V⎓3.0A 17.7W Max, 3.3-11.0V⎓1.65A 18.2W Max

4.2 Test Setup Configuration

See test photographs attached in *EUT TEST SETUP PHOTOGRAPHS* for the actual connections between Product and support equipment.

4.2 Emission Designator

LTE Band 5	QPSK		16QAM	
BW(MHz)	**Emission Designator (99%OBW)**	**Maximum ERP(W)**	**Emission Designator (99%OBW)**	**Maximum ERP(W)**
1.4	1M10G7D	0.210	1M10W7D	0.175
3	2M70G7D	0.206	2M70W7D	0.169
5	4M53G7D	0.210	4M51W7D	0.185
10	9M00G7D	0.219	9M00W7D	0.179

LTE Band 41	QPSK		16QAM	
BW(MHz)	**Emission Designator (99%OBW)**	**Maximum EIRP(W)**	**Emission Designator (99%OBW)**	**Maximum EIRP(W)**
5	4M51G7D	0.288	4M51W7D	0.243
10	9M02G7D	0.286	9M02W7D	0.238
15	13M5G7D	0.286	13M5W7D	0.235
20	18M0G7D	0.289	17M9W7D	0.233

4.3 Description Operation Frequency

LTE Band 5(1.4MHz)		LTE Band 5(3MHz)	
Channel	**Frequency (MHz)**	**Channel**	**Frequency (MHz)**
20407	824.7	20415	825.5
20525	836.5	20525	836.5
20643	848.3	20635	847.5
LTE Band 5(5MHz)		**LTE Band 5(10MHz)**	
Channel	**Frequency (MHz)**	**Channel**	**Frequency (MHz)**
20425	826.5	20450	829
20525	836.5	20525	836.5
20625	846.5	20600	844

LTE Band 41(5MHz)		LTE Band 41(10MHz)	
Channel	**Frequency (MHz)**	**Channel**	**Frequency (MHz)**
40065	2537.5	40090	2540
40640	2595	40640	2595
41215	2652.5	41190	2650
LTE Band 41(15MHz)		**LTE Band 41(20MHz)**	
Channel	**Frequency (MHz)**	**Channel**	**Frequency (MHz)**
40115	2542.5	40140	2545
40640	2595	40640	2595
41165	2647.5	41140	2645

4.4 Test Mode

Test modes are chosen to be reported as the worst case configuration below:

Test Mode		
Band	**Radiated TCs**	**Conducted TCs**
LTE Band 5	QPSK Link (1.4MHz / 3MHz / 5MHz / 10MHz)	16QAM Link (1.4MHz / 3MHz / 5MHz / 10MHz)
LTE Band 41	QPSK Link (5MHz /10MHz / 15MHz / 20MHz)	16QAM Link (5MHz /10MHz / 15MHz / 20MHz)
Note 1: All modes and data rates and positions were investigated. Note 2: Both the SIM 1 and SIM 2 were tested, the worst mode is the SIM 1, the data recording in the report.		

Antenna port conducted and radiated test items were performed according to KDB 971168 D01 Power Meas License Digital Systems v03 with maximum output power.

EUT Cable List and Details

Cable Description	Length (M)	Shielded/Unshielded	With Core/ Without Core
/	/	/	/
/	/	/	/

Auxiliary Equipment List and Details

Description	Manufacturer	Model	Serial Number
/	/	/	/

Special Cable List and Details

Cable Description	Length (M)	Shielded/Unshielded	With Core/ Without Core
/	/	/	/

Radiated measurements were performed with rotating EUT in different three orthogonal test planes to find the maximum emission.

Test Items	Band	Bandwidth (MHz)						Modulation		RB #			Test Channel		
		1.4	3	5	10	15	20	QPSK	16QAM	1	Half	Full	L	M	H
Max. Output Power	5	v	v	v	v	-	-	v	v	v	v	v	v	v	v
	41	-	-	v	v	v	v	v	v	v	v	v	v	v	v
Peak-to-Average Ratio	5	v	v	v	v	-	-	v	v	v	v	v	v	v	v
	41			v	v	v	v	v	v	v	v	v	v	v	v
26dB and 99% Bandwidth	5	v	v	v	v	-	-	v	v	v	v	v	v	v	v
	41			v	v	v	v	v	v	v	v	v	v	v	v
Conducted Band Edge	5	v	v	v	v	-	-	v	v	v	v	v	v	-	v
	41			v	v	v	v	v	v	v	v	v	v	v	v
Conducted Spurious Emission	5	v	v	v	v	-	-	v	v	v	-	-	v	v	v
	41			v	v	v	v	v	v	v	v	v	v	v	v
Frequency Stability	5	v	-	-	-	-	-	v	v	v	-	-	v	v	v
	41	v	-	-	-	-	-	v	v	v	-	-	v	v	v
E.R.P./ E.I.R.P.	5	v	v	v	v	-	-	v	v	v	v	v	v	v	v
	41			v	v	v	v	v	v	v	v	v	v	v	v
Radiated Spurious Emission	5	v	-	-	-	-	-	v	v	v	-	-	v	v	v
	41	v						v	v	v			v	v	v
Note	1.The mark “v “ means that this configuration is chosen for testing 2.The mark “-“ means that this bandwidth is not supported.														

4.5 Support Equipment

No.	Device Type	Brand	Model	Series No.	Note
E-1	Tablet	acer	Acer Iconia Tab iM10-22	N/A	EUT
E-2	Adapter	N/A	623022C-1	---	---

Notes:
1. All the equipment/cables were placed in the worst-case configuration to maximize the emission during the test.
2. Grounding was established in accordance with the manufacturer's requirements and conditions for the intended use.

4.6 Measurement Results Explanation Example

For all conducted test items:
The offset level is set in the spectrum analyzer to compensate the RF cable loss and attenuator factor between RF conducted output port and spectrum analyzer. With the offset compensation, the spectrum analyzer reading level will be exactly the RF output level. The spectrum analyzer offset is derived from RF cable loss and attenuator factor. Offset = RF cable loss + attenuator factor.

5. Test Facility And Test Instrument Used

5.1 Test Facility

All measurement facilities used to collect the measurement data are located at Shenzhen BCTC Testing Co., Ltd. Address: 1-2/F., Building B, Pengzhou Industrial Park, No.158, Fuyuan 1st Road, Zhancheng, Fuhai Subdistrict, Bao'an District, Shenzhen, Guangdong, China. The site and apparatus are constructed in conformance with the requirements of ANSI C63.4 and CISPR 16-1-1 other equivalent standards.
FCC Test Firm Registration Number: 712850
A2LA certificate registration number is: CN1212
ISED Registered No.: 23583
ISED CAB identifier: CN0017

5.2 Test Instrument Used

RF Conducted Test					
Equipment	**Manufacturer**	**Model#**	**Serial#**	**Last Cal.**	**Next Cal.**
Power meter	Keysight	E4419	\	May 16, 2024	May 15, 2025
Power Sensor (AV)	Keysight	E9300A	\	May 16, 2024	May 15, 2025
Signal Analyzer20kHz-26.5GHz	Keysight	N9020A	MY49100060	May 16, 2024	May 15, 2025
Spectrum Analyzer9kHz-40GHz	R&S	FSP40	100363	May 16, 2024	May 15, 2025
Communication test set	R&S	CMW500	126173	Nov. 13. 2023	Nov. 12, 2024
Radio frequency control box	MAIWEI	MW200-RFCB	\	\	\
Software	MAIWEI	MTS 8200	\	\	\

Radiated Emissions Test (966 Chamber02)					
Equipment	**Manufacturer**	**Model#**	**Serial#**	**Last Cal.**	**Next Cal.**
966 chamber	SKET	966 Room	966	Oct. 31. 2024	Oct. 30. 2027
Receiver	R&S	ESR3	102075	May 16, 2024	May 15, 2025
Receiver	R&S	ESRI7	100010	Oct. 31. 2024	Oct. 30. 2025
Amplifier	SKET	LNPA-30M01G-30	SK2021082004	Oct. 31. 2024	Oct. 30. 2025
TRILOG Broadband Antenna	Schwarzbeck	VULB9168	1323	May 21, 2024	May 20, 2025
Loop Antenna(9KHz-30MHz)	Schwarzbeck	FMZB1519B	00014	May 21, 2024	May 20, 2025
Amplifier	SKET	LAPA_01G18G-45dB	SK2021040901	May 16, 2024	May 15, 2025
Horn Antenna	Schwarzbeck	BBHA9120D	1541	May 21, 2024	May 20, 2025
Amplifier(18GHz-40GHz)	MITEQ	TTA1840-35-HG	2034381	May 16, 2024	May 15, 2025
Horn Antenn(18GHz-40GHz)	Schwarzbeck	BBHA9170	00822	May 21, 2024	May 20, 2025
Spectrum Analyzer9kHz-40GHz	R&S	FSP40	100363	May 16, 2024	May 15, 2025
Software	Frad	EZ-EMC	FA-03A2 RE	\	\

6. Spurious Radiated Emissions

6.1 Block Diagram Of Test Setup

（A）Radiated Emission Test-Up Frequency Below 30MHz

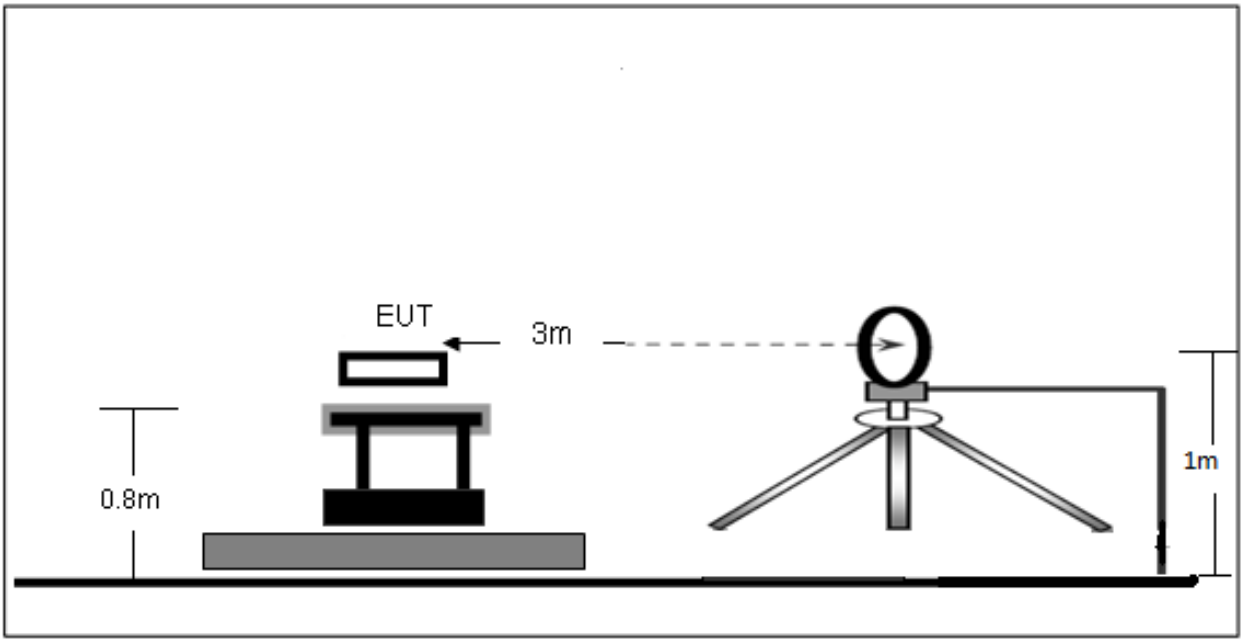

（B）Radiated Emission Test-Up Frequency 30MHz~1GHz

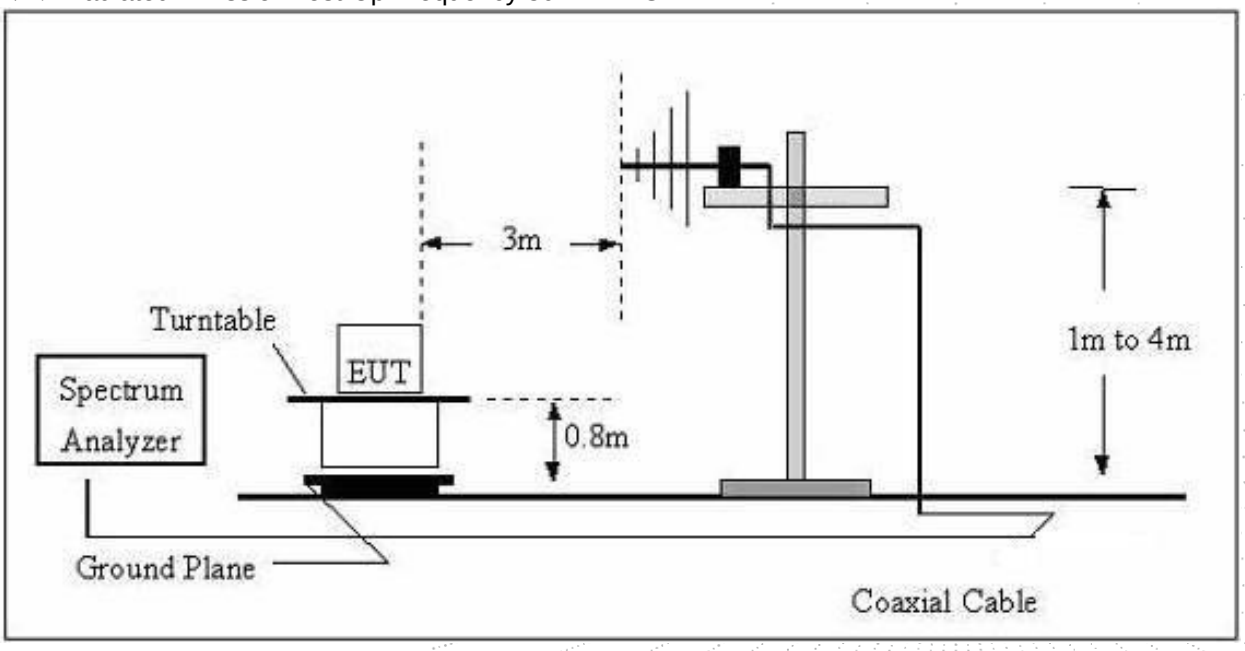

（C）Radiated Emission Test-Up Frequency Above 1GHz

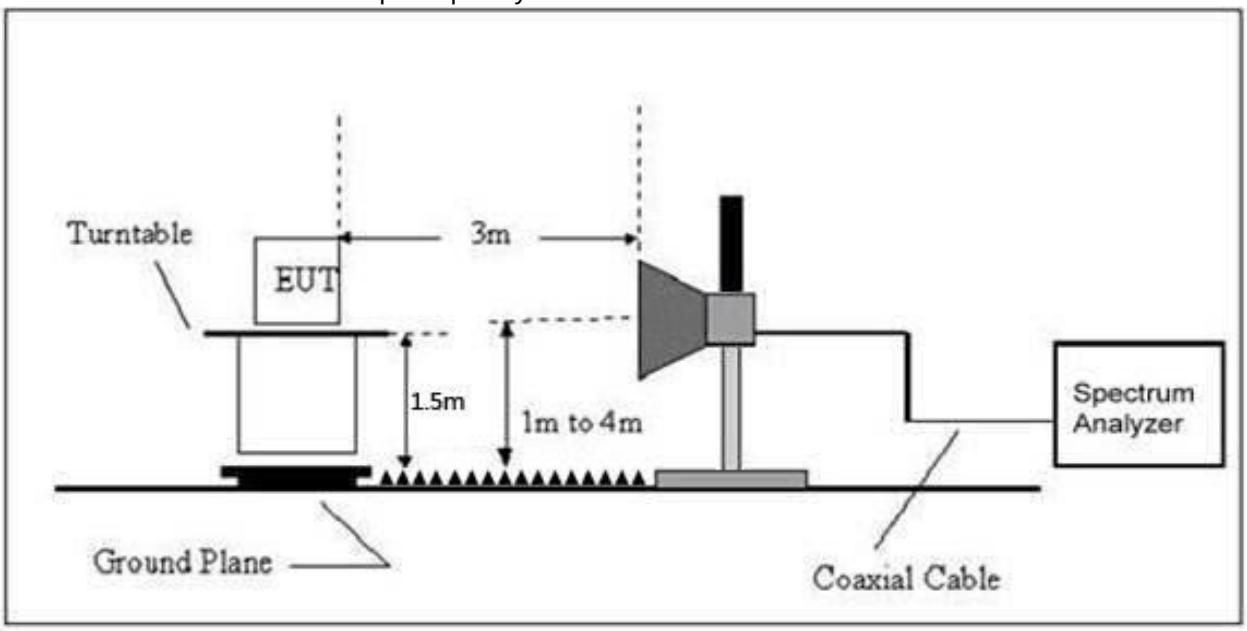

6.2 Limit

FCC § 2.1053 & 22.917(a) & 24.238(a) & 27.53(a) & 27.53(c) & 27.53(f) & 27.53(g) & 27.53(h) & 27.53(m) ;

FCC § 22.917(a) & 24.238(a)

The power of any emission outside of the authorized operating frequency ranges must be attenuated below the transmitting power (P) by a factor of at least 43+10*log(P) dB. This is calculated to be -13 dBm.

FCC § 27.53(g)

For operations in the 600MHz band and the 698-746MHz band, the power of any emission outside a licensee's frequency band(s) of operation shall be attenuated below the transmitter power (P) within the licensed band(s) of operation, measured in watts, by at least 43+10*log(P) dB. Compliance with this provision is based on the use of measurement instrumentation employing a resolution bandwidth of 100 kHz bands immediately outside and adjacent to a licensee's frequency block, a resolution bandwidth of at least 30 kHz may be employed.

FCC § 27.53(h) (1)

Except as otherwise specified below, for operations in the 1695-1710 MHz, 1710-1755 MHz, 1755-1780 MHz, 1915-1920 MHz, 1995-2000 MHz, 2000-2020 MHz, 2110-2155 MHz, 2155-2180 MHz, and 2180-2200 bands,
the power of any emission outside a licensee's frequency block shall be attenuated below the transmitter power
(P) in watts by at least 43 + 10 log10 (P) dB. FCC § 27.53(m) (4)
For mobile digital stations (BRS and EBS stations), the attenuation factor shall be not less than:

•40+10logP dB (−10 dBm, 100 nW) on all frequencies between the channel edge and 5 MHz from the channel edge.
•43+10logP dB (−13 dBm, 50 nW) on all frequencies between 5 MHz and X MHz from the channel edge,

•55+10logP dB (−25 dBm, 3 nW) on all frequencies more than X MHz from the channel edge, where X is the greater of 6 MHz or the actual emission bandwidth (26 dB).

In addition, the attenuation factor shall not be less that 43 + 10 log (P) dB on all frequencies between 2490.5 MHz and 2496 MHz and 55 + 10 log (P) dB at or below 2490.5 MHz. Mobile Satellite Service licensees operating on frequencies below 2495 MHz may also submit a documented interference complaint against BRS licensees operating on channel BRS Channel 1 on the same terms and conditions as adjacent channel BRS or EBS licensees.

6.3 Test procedure

1. The setup of EUT is according with per ANSI/TIA Standard 603D and ANSI C63.4-2014 measurement procedure.
2. The measurement antenna was placed at a distance of 3 meters from the EUT. During the tests, the antenna height and polarization as well as EUT azimuth were varied in order to identify the maximum level of emissions from the EUT. The test was performed by placing the EUT on 3-orthogonal axis.
3. The frequency range up to tenth harmonic of the fundamental frequency was investigated.
4. Remove the EUT and replace it with substitution antenna. A signal generator was connected to the substitution antenna by a non-radiating cable. The absolute levels of the spurious emissions were measured by the substitution.

6.4 Test Result

For FDD-LTE Band 5 Mode

Frequency (MHz)	Reading (dBm)	Correct dB	Result (dBm)	Limit (dBm)	Margin (dB)	Polar H/V
Low Channel (824.7MHz)						
75.21	-14.02	-30.61	-44.63	-13.00	-31.63	H
1649.40	-12.77	-27.37	-40.14	-13.00	-27.14	H
2474.10	-15.01	-25.18	-40.19	-13.00	-27.19	H
75.21	-13.18	-30.61	-43.79	-13.00	-30.79	V
1649.40	-4.53	-27.37	-31.90	-13.00	-18.90	V
2474.10	-12.79	-25.18	-37.97	-13.00	-24.97	V
Middle Channel (836.5MHz)						
75.21	-10.91	-30.61	-41.52	-13.00	-28.52	H
1673.00	-15.31	-27.32	-42.63	-13.00	-29.63	H
2509.50	-11.44	-25.07	-36.51	-13.00	-23.51	H
75.21	-8.47	-30.61	-39.08	-13.00	-26.08	V
1673.00	-8.07	-27.32	-35.39	-13.00	-22.39	V
2509.50	-9.36	-25.07	-34.43	-13.00	-21.43	V
High Channel (848.3MHz)						
75.21	-15.17	-30.61	-45.78	-13.00	-32.78	H
1696.60	-13.94	-27.27	-41.21	-13.00	-28.21	H
2544.90	-10.58	-24.97	-35.55	-13.00	-22.55	H
75.21	-8.50	-30.61	-39.11	-13.00	-26.11	V
1696.60	-5.52	-27.27	-32.79	-13.00	-19.79	V
2544.90	-8.53	-24.97	-33.50	-13.00	-20.50	V

For FDD-LTE Band 41 Mode

Frequency (MHz)	Reading (dBm)	Correct dB	Result (dBm)	Limit (dBm)	Margin (dB)	Polar H/V
Low Channel (2498.5MHz)						
75.21	-9.94	-30.61	-40.55	-25.00	-15.55	H
4997.00	-21.53	-19.61	-41.14	-25.00	-16.14	H
7495.50	-24.47	-13.41	-37.88	-25.00	-12.88	H
75.21	-13.36	-30.61	-43.97	-25.00	-18.97	V
4997.00	-19.47	-19.61	-39.08	-25.00	-14.08	V
7495.50	-17.71	-13.41	-31.12	-25.00	-6.12	V
Middle Channel (2593MHz)						
75.21	-11.26	-30.61	-41.87	-25.00	-16.87	H
5186.00	-24.31	-19.51	-43.82	-25.00	-18.82	H
7779.00	-21.52	-12.62	-34.14	-25.00	-9.14	H
75.21	-13.35	-30.61	-43.96	-25.00	-18.96	V
5186.00	-18.19	-19.51	-37.70	-25.00	-12.70	V
7779.00	-19.42	-12.62	-32.04	-25.00	-7.04	V
High Channel (2687.5MHz)						
75.21	-13.10	-30.61	-43.71	-25.00	-18.71	H
5375.00	-21.78	-19.51	-41.29	-25.00	-16.29	H
8062.50	-19.83	-12.62	-32.45	-25.00	-7.45	H
75.21	-12.29	-30.61	-42.90	-25.00	-17.90	V
5375.00	-17.74	-19.51	-37.25	-25.00	-12.25	V
8062.50	-19.02	-12.62	-31.64	-25.00	-6.64	V

Note: Result=Reading+ Correct, Margin= Result- Limit
Note: Testing is carried out with frequency rang 9kHz to the tenth harmonics, other than listed in the table above are attenuated more than 20dB below the permissible limits or the field strength is too small to be measured.

7. EUT Photographs

EUT Photo

NOTE: Appendix-Photographs Of EUT Constructional Details.

8. EUT Test Setup Photographs

Radiated Measurement Photos

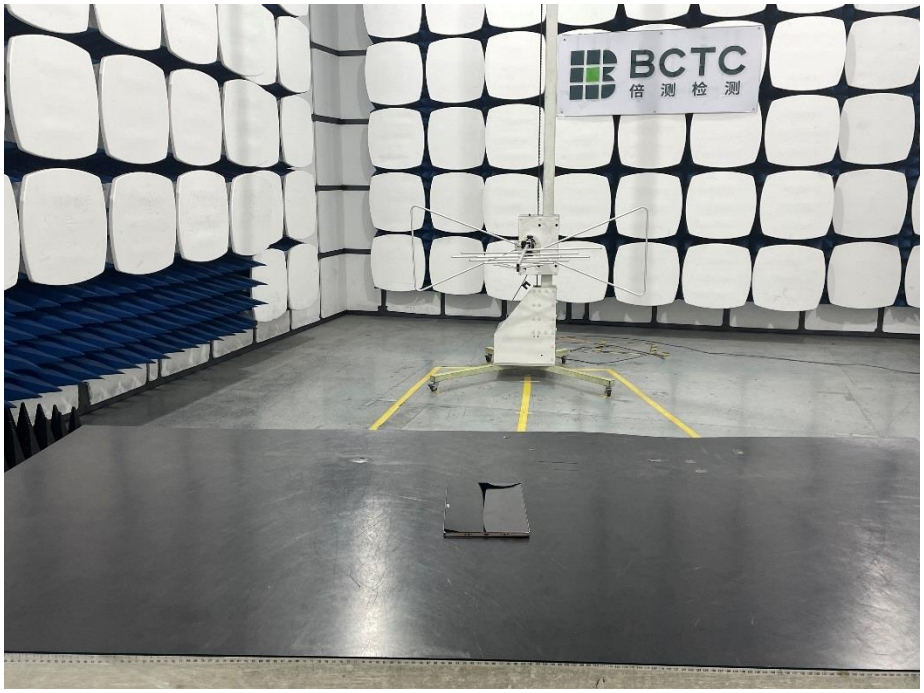

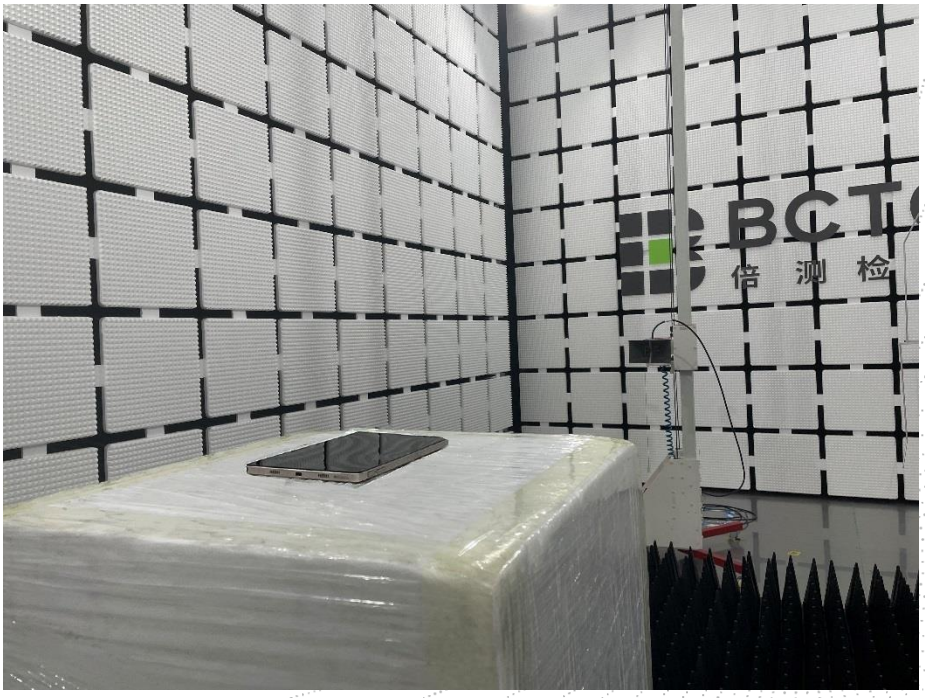

STATEMENT

1. The equipment lists are traceable to the national reference standards.

2. The test report can not be partially copied unless prior written approval is issued from our lab.

3. The test report is invalid without the "special seal for inspection and testing".

4. The test report is invalid without the signature of the approver.

5. The test process and test result is only related to the Unit Under Test.

6. Sample information is provided by the client and the laboratory is not responsible for its authenticity.

7. The quality system of our laboratory is in accordance with ISO/IEC17025.

8. If there is any objection to this test report, the client should inform issuing laboratory within 15 days from the date of receiving test report.

Address:
1-2/F., Building B, Pengzhou Industrial Park, No.158, Fuyuan 1st Road, Zhancheng, Fuhai Subdistrict, Bao'an District, Shenzhen, Guangdong, China

TEL: 400-788-9558

P.C.: 518103

FAX: 0755-33229357

Website: http://www.chnbctc.com

Consultation E-mail: bctc@bctc-lab.com.cn

Complaint/Advice E-mail: advice@bctc-lab.com.cn

※※※※※ END ※※※※※