TEST REPORT

Product	:	Bicycle Headlight
Trade mark	:	mentech
Model/Type reference	:	Spark 1200
Serial Number	:	N/A
Report Number	:	EED32Q81965001
FCC ID	:	2A95D-SPARK1200
Date of Issue	:	Jan. 10, 2025
Test Standards	:	47 CFR Part 15 Subpart C
Test result	:	PASS

Prepared for:

Guangdong Mentech Technology Co., Ltd
504, Building D1, TCL Science Park, No.1001 Zhongshan Garden Road, Shuguang Community, Xili Street, Nanshan District, Shenzhen, Guangdong, China

Prepared by:

Centre Testing International Group Co., Ltd.
Hongwei Industrial Zone, Bao'an 70 District, Shenzhen, Guangdong, China
TEL: +86-755-3368 3668
FAX: +86-755-3368 3385

Compiled by:	Keven Tan	Reviewed by:	Frazer Li
	Keven Tan		Frazer Li
Approved by:	Aaron Ma	Date:	Jan. 10, 2025
	Aaron Ma		

CENTRE TESTING INTERNATIONAL GROUP CO.,LTD. CTI Report Seal

Check No.::8851281124

1 Content

1 CONTENT 2
2 VERSION 3
3 TEST SUMMARY 4
4 GENERAL INFORMATION 5
4.1 CLIENT INFORMATION 5
4.2 GENERAL DESCRIPTION OF EUT 5
4.3 TEST CONFIGURATION 6
4.4 TEST ENVIRONMENT 7
4.5 DESCRIPTION OF SUPPORT UNITS 7
4.6 TEST LOCATION 7
4.7 MEASUREMENT UNCERTAINTY (95% CONFIDENCE LEVELS, K=2) 8
5 EQUIPMENT LIST 9
6 TEST RESULTS AND MEASUREMENT DATA 12
6.1 ANTENNA REQUIREMENT 12
6.2 CONDUCTED EMISSIONS 13
6.3 MAXIMUM CONDUCTED OUTPUT POWER 16
6.4 DTS BANDWIDTH 17
6.5 MAXIMUM POWER SPECTRAL DENSITY 18
6.6 BAND EDGE MEASUREMENTS AND CONDUCTED SPURIOUS EMISSION 19
6.7 RADIATED SPURIOUS EMISSION & RESTRICTED BANDS 20
7 APPENDIX A 36
8 PHOTOGRAPHS OF TEST SETUP 37
9 PHOTOGRAPHS OF EUT CONSTRUCTIONAL DETAILS 39

2 Version

Version No.	Date	Description
00	Jan. 10, 2025	Original

3 Test Summary

Test Item	Test Requirement	Result
Antenna Requirement	47 CFR Part 15 Subpart C Section 15.203/15.247 (c)	PASS
AC Power Line Conducted Emission	47 CFR Part 15 Subpart C Section 15.207	PASS
DTS Bandwidth	47 CFR Part 15 Subpart C Section 15.247 (a)(2)	PASS
Maximum Conducted Output Power	47 CFR Part 15 Subpart C Section 15.247 (b)(3)	PASS
Maximum Power Spectral Density	47 CFR Part 15 Subpart C Section 15.247 (e)	PASS
Band Edge Measurements	47 CFR Part 15 Subpart C Section 15.247(d)	PASS
Conducted Spurious Emissions	47 CFR Part 15 Subpart C Section 15.247(d)	PASS
Radiated Spurious Emission & Restricted bands	47 CFR Part 15 Subpart C Section 15.205/15.209	PASS

4 General Information

4.1 Client Information

Applicant:	Guangdong Mentech Technology Co., Ltd
Address of Applicant:	504, Building D1, TCL Science Park, No.1001 Zhongshan Garden Road, Shuguang Community, Xili Street, Nanshan District, Shenzhen, Guangdong, China
Manufacturer:	Guangdong Mentech Technology Co., Ltd
Address of Manufacturer:	504, Building D1, TCL Science Park, No.1001 Zhongshan Garden Road, Shuguang Community, Xili Street, Nanshan District, Shenzhen, Guangdong, China
Factory:	Dongguan Light Up Your Way Technology Co., Ltd.
Address of Factory:	201, 2nd Floor, Building 1, Glorious Intelligent Valley, No. 136, Yongjun Road, Dalingshan, Dongguan, Guangdong, China

4.2 General Description of EUT

Product Name:	Bicycle Headlight	
Model No.:	Spark 1200	
Trade mark:	mentech	
Product Type:	☐ Mobile ☒ Portable ☐ Fix Location	
Operation Frequency:	2402MHz~2480MHz	
Modulation Type:	GFSK	
Transfer Rate:	☒ 1Mbps ☒ 2Mbps	
Number of Channel:	40	
Antenna Type:	Chip Antenna	
Antenna Gain:	0.9 dBi	
Power Supply:	Battery:	DC 3.6V
Test Voltage:	DC 3.6V	
Sample Received Date:	Nov. 28, 2024	
Sample tested Date:	Dec. 11, 2024 to Dec. 20, 2024	

Operation Frequency each of channel							
Channel	Frequency	Channel	Frequency	Channel	Frequency	Channel	Frequency
0	2402MHz	10	2422MHz	20	2442MHz	30	2462MHz
1	2404MHz	11	2424MHz	21	2444MHz	31	2464MHz
2	2406MHz	12	2426MHz	22	2446MHz	32	2466MHz
3	2408MHz	13	2428MHz	23	2448MHz	33	2468MHz
4	2410MHz	14	2430MHz	24	2450MHz	34	2470MHz
5	2412MHz	15	2432MHz	25	2452MHz	35	2472MHz
6	2414MHz	16	2434MHz	26	2454MHz	36	2474MHz
7	2416MHz	17	2436MHz	27	2456MHz	37	2476MHz
8	2418MHz	18	2438MHz	28	2458MHz	38	2478MHz
9	2420MHz	19	2440MHz	29	2460MHz	39	2480MHz

Note:
In section 15.31(m), regards to the operating frequency range over 10 MHz, the lowest frequency, the middle frequency, and the highest frequency of channel were selected to perform the test, and the selected channel see below:

Channel	Frequency
The lowest channel (CH0)	2402MHz
The middle channel (CH19)	2440MHz
The highest channel (CH39)	2480MHz

4.3 Test Configuration

EUT Test Software Settings:	
Test Software:	Pan107xToolBox V0.004.exe (manufacturer declare)
EUT Power Grade:	Default (Power level is built-in set parameters and cannot be changed and selected)

Use test software to set the lowest frequency, the middle frequency and the highest frequency keep transmitting of the EUT.

Test Mode	Modulation	Rate	Channel	Frequency(MHz)
Mode a	GFSK	1Mbps	CH0	2402
Mode b	GFSK	1Mbps	CH19	2440
Mode c	GFSK	1Mbps	CH39	2480
Mode d	GFSK	2Mbps	CH0	2402
Mode e	GFSK	2Mbps	CH19	2440
Mode f	GFSK	2Mbps	CH39	2480

4.4 Test Environment

Operating Environment:	
Radiated Spurious Emissions:	
Temperature:	22~25.0 °C
Humidity:	50~55 % RH
Atmospheric Pressure:	1010mbar
Conducted Emissions:	
Temperature:	22~25.0 °C
Humidity:	50~55 % RH
Atmospheric Pressure:	1010mbar
RF Conducted:	
Temperature:	22~25.0 °C
Humidity:	50~55 % RH
Atmospheric Pressure:	1010mbar

4.5 Description of Support Units

The EUT has been tested with associated equipment below.

1） support equipment

Description	Manufacturer	Model No.	Certification	Supplied by
Netbook	HP	DESKTOP-H31GDCQ	FCC&CE	CTI

4.6 Test Location

All tests were performed at:

Centre Testing International Group Co., Ltd
Building C, Hongwei Industrial Park Block 70, Bao'an District, Shenzhen, China
Telephone: +86 (0) 755 33683668 Fax:+86 (0) 755 33683385
No tests were sub-contracted.
FCC Designation No.: CN1164

4.7 Measurement Uncertainty (95% confidence levels, k=2)

No.	Item	Measurement Uncertainty
1	Radio Frequency	7.9×10^{-8}
2	RF power, conducted	0.46dB (30MHz-1GHz)
		0.55dB (1GHz-40GHz)
3	Radiated Spurious emission test	3.3dB (9kHz-30MHz)
		4.3dB (30MHz-1GHz)
		4.5dB (1GHz-18GHz)
		3.4dB (18GHz-40GHz)
4	Conduction emission	3.5dB (9kHz to 150kHz)
		3.1dB (150kHz to 30MHz)
5	Temperature test	0.64°C
6	Humidity test	3.8%
7	DC power voltages	0.026%

5 Equipment List

Conducted Emissions Test					
Equipment	Manufacturer	Model No.	Serial Number	Cal. date (mm-dd-yyyy)	Cal. Due date (mm-dd-yyyy)
Receiver	R&S	ESCI	100435	04-18-2024	04-17-2025
LISN	R&S	ENV216	100098	09-19-2024	09-18-2025
Capacitive voltage probe	Schwarzbeck	CVP 9222C	00124	06-18-2024	06-17-2025
ISN	TESEQ	ISN T800	30297	12-14-2023 12-05-2024	12-13-2024 12-04-2025
Barometer	Changchun	DYM3	1188	---	---
Temperature/ Humidity Indicator	Defu	TH128	---	04-25-2024	04-24-2025
Test software	Fara	EZ-EMC	EMC-CON 3A1.1	---	---

3M Semi/full-anechoic Chamber(2#)					
Equipment	Manufacturer	Model No.	Serial Number	Cal. Date (mm-dd-yyyy)	Cal. Due date (mm-dd-yyyy)
3M Chamber & Accessory Equipment	TDK	SAC-3	---	05-22-2022	05-21-2025
Receiver	R&S	ESCI7	100938-003	09-07-2024	09-06-2025
Spectrum Analyzer	R&S	FSV40	101200	07-18-2024	07-17-2025
Loop Antenna	Schwarzbeck	FMZB 1519B	1519B-076	04-16-2024	04-15-2025
TRILOG Broadband Antenna	Schwarzbeck	VULB9163	9163-618	05-18-2024	05-17-2025
Horn Antenna	Schwarzbeck	BBHA 9120D	9120D-1869	04-16-2024	04-15-2025
Horn Antenna	A.H.SYSTEMS	SAS-574	374	07-02-2023	07-01-2026
Preamplifier	Agilent	11909A	12-1	03-22-2024	03-21-2025
Preamplifier	EMCI	EMC051845SE	980380	12-14-2023 12-05-2024	12-13-2024 12-04-2025
Preamplifier	CD	PAP-1840-60	6041.6042	06-19-2024	06-18-2025
Cable line	Fulai(7M)	SF106	5219/6A	05-22-2022	05-21-2025
Cable line	Fulai(6M)	SF106	5220/6A	05-22-2022	05-21-2025
Cable line	Fulai(3M)	SF106	5216/6A	05-22-2022	05-21-2025
Cable line	Fulai(3M)	SF106	5217/6A	05-22-2022	05-21-2025
Test software	Fara	EZ-EMC	EMEC-3A1-Pre	---	---

3M full-anechoic Chamber					
Equipment	**Manufacturer**	**Model No.**	**Serial Number**	**Cal. Date (mm-dd-yyyy)**	**Cal. Due date (mm-dd-yyyy)**
Fully Anechoic Chamber	TDK	FAC-3	---	01-09-2024	01-08-2027
Receiver	Keysight	N9038A	MY57290136	01-09-2024	01-08-2025
Spectrum Analyzer	Keysight	N9020B	MY57111112	01-29-2024	01-28-2025
Spectrum Analyzer	Keysight	N9030B	MY57140871	01-23-2024	01-22-2025
TRILOG Broadband Antenna	Schwarzbeck	VULB 9163	9163-1148	04-28-2024	04-27-2025
Horn Antenna	Schwarzbeck	BBHA 9170	9170-832	04-16-2024	04-15-2025
Horn Antenna	ETS-LINDGREN	3117	57407	07-03-2024	07-02-2025
Preamplifier	EMCI	EMC001330	980563	03-08-2024	03-07-2025
Preamplifier	Tonscend	TAP-011858	AP21B806112	07-18-2024	07-17-2025
Preamplifier	Tonscend	EMC051845SE	980380	12-14-2023 12-05-2024	12-13-2024 12-04-2025
Communication test set	R&S	CMW500	104466	12-05-2024	12-04-2025
Temperature/ Humidity Indicator	biaozhi	GM1360	EE1186631	04-07-2024	04-06-2025
RSE Automatic test software	JS Tonscend	JS36-RSE	V4.0.0.0	---	---
Cable line	Times	SFT205-NMSM-2.50M	394812-0001	01-09-2024	01-08-2027
Cable line	Times	SFT205-NMSM-2.50M	394812-0002	01-09-2024	01-08-2027
Cable line	Times	SFT205-NMSM-2.50M	394812-0003	01-09-2024	01-08-2027
Cable line	Times	SFT205-NMSM-2.50M	393495-0001	01-09-2024	01-08-2027
Cable line	Times	EMC104-NMNM-1000	SN160710	01-09-2024	01-08-2027
Cable line	Times	SFT205-NMSM-3.00M	394813-0001	01-09-2024	01-08-2027
Cable line	Times	SFT205-NMNM-1.50M	381964-0001	01-09-2024	01-08-2027
Cable line	Times	SFT205-NMSM-7.00M	394815-0001	01-09-2024	01-08-2027
Cable line	Times	HF160-KMKM-3.00M	393493-0001	01-09-2024	01-08-2027

BT/WIFI/SRD RF test system					
Equipment	**Manufacturer**	**Mode No.**	**Serial Number**	**Cal. Date (mm-dd-yyyy)**	**Cal. Due date (mm-dd-yyyy)**
Communication test set	R&S	CMW500	107929	06-26-2024	06-25-2025
Signal Generator	R&S	SMBV100A	1407.6004K02-262149-CV	09-02-2024	09-01-2025
Spectrum Analyzer	R&S	FSV40	101200	07-18-2024	07-17-2025
RF control unit(power unit)	MWRF-test	MW100-RFCB	MW220620CTI-42	06-25-2024	06-24-2025
High-low temperature test chamber	Dong Guang Qin Zhuo	LK-80GA	QZ20150611879	11/12/2023	12/10/2024
Temperature/ Humidity Indicator	biaozhi	HM10	1804186	05-29-2024	05-28-2025
BT&WI-FI Automatic test software	MWRF-test	MTS 8310	V2.0.0.0	---	---
Spectrum Analyzer	R&S	FSV3044	101509	01/17/2024	01/16/2025

6 Test results and Measurement Data

6.1 Antenna Requirement

Standard requirement:	47 CFR Part 15C Section 15.203 /247(c)
15.203 requirement: An intentional radiator shall be designed to ensure that no antenna other than that furnished by the responsible party shall be used with the device. The use of a permanently attached antenna or of an antenna that uses a unique coupling to the intentional radiator, the manufacturer may design the unit so that a broken antenna can be replaced by the user, but the use of a standard antenna jack or electrical connector is prohibited. 15.247(b) (4) requirement: The conducted output power limit specified in paragraph (b) of this section is based on the use of antennas with directional gains that do not exceed 6 dBi. Except as shown in paragraph (c) of this section, if transmitting antennas of directional gain greater than 6 dBi are used, the conducted output power from the intentional radiator shall be reduced below the stated values in paragraphs (b)(1), (b)(2), and (b)(3) of this section, as appropriate, by the amount in dB that the directional gain of the antenna exceeds 6 dBi.	
EUT Antenna:	Please see Internal photos
The antenna is chip antenna. The best case gain of the antenna is 0.9dBi.	

6.2 Conducted Emissions

Test Requirement:	47 CFR Part 15C Section 15.207
Test Method:	ANSI C63.10: 2013
Test Frequency Range:	150kHz to 30MHz
Receiver setup:	RBW=9 kHz, VBW=30 kHz, Sweep time=auto
Limit:	

Frequency range (MHz)	Limit (dBuV)	
	Quasi-peak	Average
0.15-0.5	66 to 56*	56 to 46*
0.5-5	56	46
5-30	60	50

* Decreases with the logarithm of the frequency.

Test Setup:

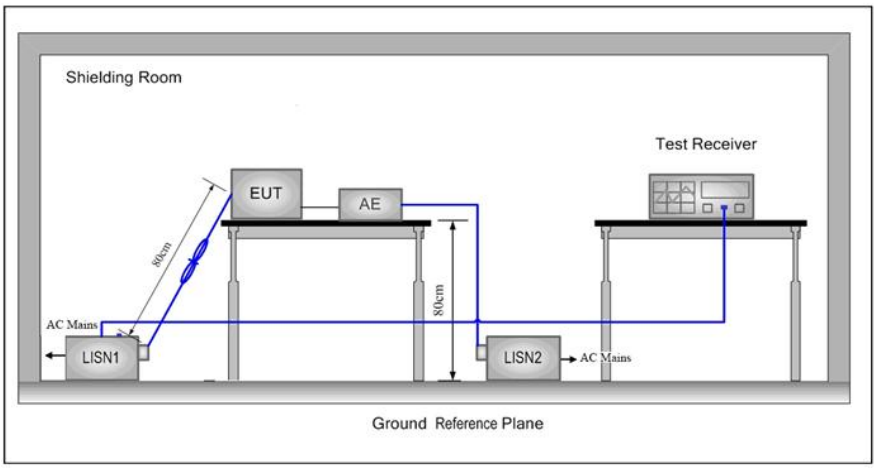

Test Procedure:

1) The mains terminal disturbance voltage test was conducted in a shielded room.
2) The EUT was connected to AC power source through a LISN 1 (Line Impedance Stabilization Network) which provides a 50Ω/50μH + 5Ω linear impedance. The power cables of all other units of the EUT were connected to a second LISN 2, which was bonded to the ground reference plane in the same way as the LISN 1 for the unit being measured. A multiple socket outlet strip was used to connect multiple power cables to a single LISN provided the rating of the LISN was not exceeded.
3) The tabletop EUT was placed upon a non-metallic table 0.8m above the ground reference plane. And for floor-standing arrangement, the EUT was placed on the horizontal ground reference plane.
4) The test was performed with a vertical ground reference plane. The rear of the EUT shall be 0.4 m from the vertical ground reference plane. The vertical ground reference plane was bonded to the horizontal ground reference plane. The LISN 1 was placed 0.8 m from the boundary of the unit under test and bonded to a ground reference plane for LISNs mounted on top of the ground reference plane. This distance was between the closest points of the LISN 1 and the EUT. All other units of the EUT and associated equipment was at least 0.8 m from the LISN 2.
5) In order to find the maximum emission, the relative positions of equipment and all of the interface cables must be changed according to ANSI C63.10: 2013 on conducted measurement.

Test Mode: All modes were tested, only the worst case mode a was recorded in the report.

Test Results:	Pass

Measurement Data

Live line:

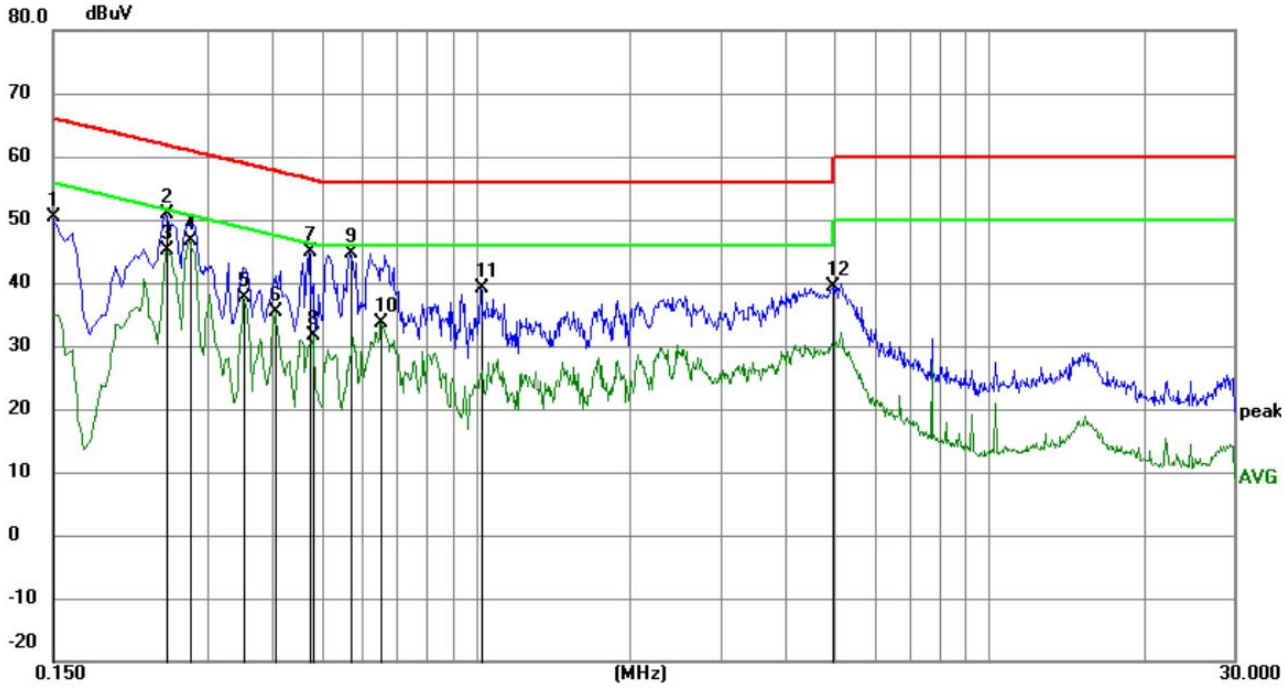

No.	Mk.	Freq.	Reading Level	Correct Factor	Measure-ment	Limit	Margin		
		MHz	dBuV	dB	dBuV	dBuV	dB	Detector	Comment
1		0.1500	40.05	10.28	50.33	66.00	-15.67	QP	
2		0.2490	40.74	10.17	50.91	61.79	-10.88	QP	
3		0.2490	34.85	10.17	45.02	51.79	-6.77	AVG	
4	*	0.2760	36.51	10.15	46.66	50.94	-4.28	AVG	
5		0.3525	27.55	10.11	37.66	48.90	-11.24	AVG	
6		0.4065	25.34	10.09	35.43	47.72	-12.29	AVG	
7		0.4740	34.91	10.08	44.99	56.44	-11.45	QP	
8		0.4830	21.46	10.08	31.54	46.29	-14.75	AVG	
9		0.5685	34.65	10.09	44.74	56.00	-11.26	QP	
10		0.6540	23.57	10.12	33.69	46.00	-12.31	AVG	
11		1.0230	28.90	10.18	39.08	56.00	-16.92	QP	
12		4.9650	29.34	10.06	39.40	56.00	-16.60	QP	

Remark:

1. The following Quasi-Peak and Average measurements were performed on the EUT:
2. Final Test Level =Receiver Reading + LISN Factor + Cable Loss.
3. If the Peak value under Average limit, the Average value is not recorded in the report.

Neutral line:

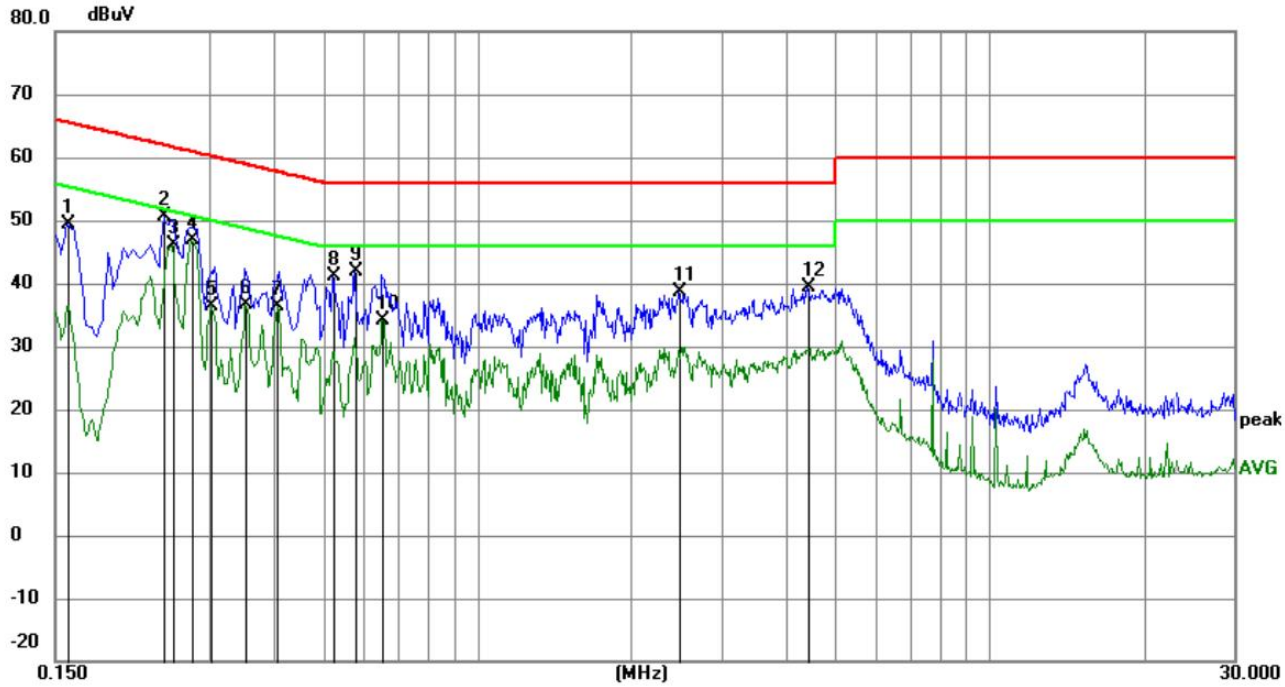

No.	Mk.	Freq.	Reading Level	Correct Factor	Measure-ment	Limit	Margin		
		MHz	dBuV	dB	dBuV	dBuV	dB	Detector	Comment
1		0.1590	39.14	10.27	49.41	65.52	-16.11	QP	
2		0.2445	40.43	10.17	50.60	61.94	-11.34	QP	
3		0.2535	35.92	10.17	46.09	51.64	-5.55	AVG	
4	*	0.2760	36.63	10.15	46.78	50.94	-4.16	AVG	
5		0.3030	26.37	10.13	36.50	50.16	-13.66	AVG	
6		0.3525	26.62	10.11	36.73	48.90	-12.17	AVG	
7		0.4065	26.29	10.09	36.38	47.72	-11.34	AVG	
8		0.5235	30.95	10.08	41.03	56.00	-14.97	QP	
9		0.5775	31.83	10.10	41.93	56.00	-14.07	QP	
10		0.6540	24.10	10.12	34.22	46.00	-11.78	AVG	
11		2.4855	28.43	10.15	38.58	56.00	-17.42	QP	
12		4.4205	29.34	10.08	39.42	56.00	-16.58	QP	

Remark:

1. The following Quasi-Peak and Average measurements were performed on the EUT:
2. Final Test Level =Receiver Reading + LISN Factor + Cable Loss.
3. If the Peak value under Average limit, the Average value is not recorded in the report.

6.3 Maximum Conducted Output Power

Test Requirement:	47 CFR Part 15C Section 15.247 (b)(3)
Test Method:	ANSI C63.10 2013
Test Setup:	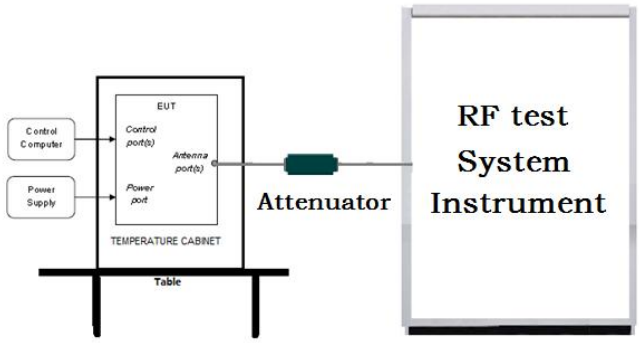 Remark: Offset=Cable loss+ attenuation factor.
Test Procedure:	a) Set the RBW ⩾ DTS bandwidth. b) Set VBW ⩾ 3 × RBW. c) Set span ⩾ 3 x RBW d) Sweep time = auto couple. e) Detector = peak. f) Trace mode = max hold. g) Allow trace to fully stabilize. h) Use peak marker function to determine the peak amplitude level.
Limit:	30dBm
Test Mode:	Refer to clause 5.3
Test Results:	Refer to Appendix A

6.4 DTS Bandwidth

Test Requirement:	47 CFR Part 15C Section 15.247 (a)(2)
Test Method:	ANSI C63.10 2013
Test Setup:	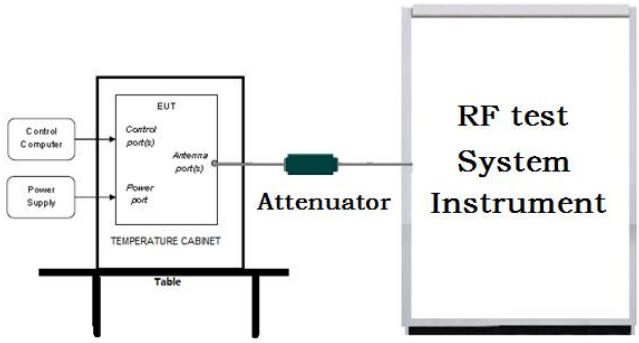 Remark: Offset=Cable loss+ attenuation factor.
Test Procedure:	a) Set RBW = 100 kHz. b) Set the VBW ⩾[3 × RBW]. c) Detector = peak. d) Trace mode = max hold. e) Sweep = auto couple. f) Allow the trace to stabilize. g) Measure the maximum width of the emission that is constrained by the frequencies associated with the two outermost amplitude points (upper and lower frequencies) that are attenuated by 6 dB relative to the maximum level measured in the fundamental emission.
Limit:	≥ 500 kHz
Test Mode:	Refer to clause 5.3
Test Results:	Refer to Appendix A

6.5 Maximum Power Spectral Density

Test Requirement:	47 CFR Part 15C Section 15.247 (e)
Test Method:	ANSI C63.10 2013
Test Setup:	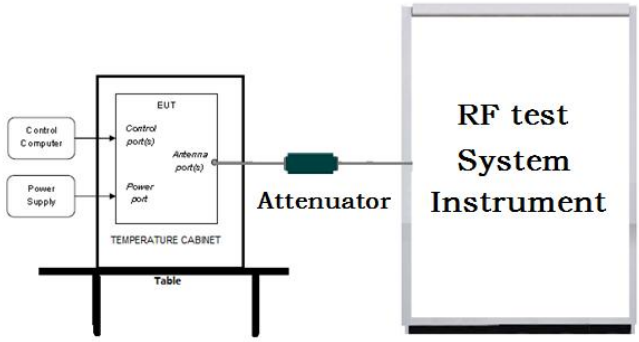 Remark: Offset=Cable loss+ attenuation factor.
Test Procedure:	a) Set analyzer center frequency to DTS channel center frequency. b) Set the span to 1.5 times the DTS bandwidth. c) Set the RBW to 3 kHz ⩽ RBW ⩽ 100 kHz. d) Set the VBW ⩾ [3 × RBW]. e) Detector = peak. f) Sweep time = auto couple. g) Trace mode = max hold. h) Allow trace to fully stabilize. i) Use the peak marker function to determine the maximum amplitude level within the RBW. j) If measured value exceeds requirement, then reduce RBW (but no less than 3 kHz) and repeat.
Limit:	≤8.00dBm/3kHz
Test Mode:	Refer to clause 5.3
Test Results:	Refer to Appendix A

6.6 Band Edge measurements and Conducted Spurious Emission

Test Requirement:	47 CFR Part 15C Section 15.247 (d)
Test Method:	ANSI C63.10 2013
Test Setup:	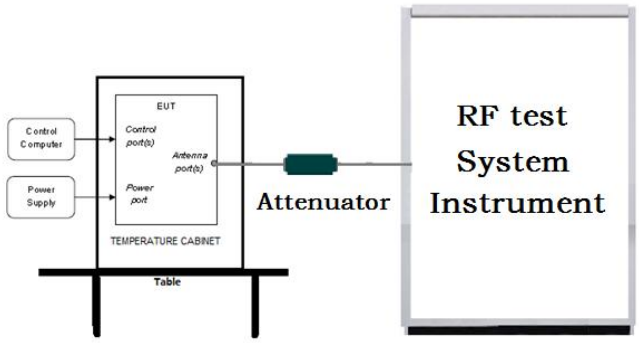 Remark: Offset=Cable loss+ attenuation factor.
Test Procedure:	a) Set RBW =100KHz. b) Set VBW = 300KHz. c) Sweep time = auto couple. d) Detector = peak. e) Trace mode = max hold. f) Allow trace to fully stabilize. g) Use peak marker function to determine the peak amplitude level.
Limit:	In any 100 kHz bandwidth outside the frequency band in which the spread spectrum intentional radiator is operating, the radio frequency power that is produced by the intentional radiator shall be at least 20 dB below that in the 100 kHz bandwidth within the band that contains the highest level of the desired power, based on either an RF conducted or a radiated measurement.
Test Mode:	Refer to clause 5.3
Test Results:	Refer to Appendix A

6.7 Radiated Spurious Emission & Restricted bands

Test Requirement:	47 CFR Part 15C Section 15.209 and 15.205
Test Method:	ANSI C63.10 2013
Test Site:	Measurement Distance: 3m (Semi-Anechoic Chamber)
Receiver Setup:	

Frequency	Detector	RBW	VBW	Remark
0.009MHz-0.090MHz	Peak	10kHz	30kHz	Peak
0.009MHz-0.090MHz	Average	10kHz	30kHz	Average
0.090MHz-0.110MHz	Quasi-peak	10kHz	30kHz	Quasi-peak
0.110MHz-0.490MHz	Peak	10kHz	30kHz	Peak
0.110MHz-0.490MHz	Average	10kHz	30kHz	Average
0.490MHz -30MHz	Quasi-peak	10kHz	30kHz	Quasi-peak
30MHz-1GHz	Quasi-peak	100 kHz	300kHz	Quasi-peak
Above 1GHz	Peak	1MHz	3MHz	Peak
	Peak	1MHz	10kHz	Average

Limit:

Frequency	Field strength (microvolt/meter)	Limit (dBuV/m)	Remark	Measurement distance (m)
0.009MHz-0.490MHz	2400/F(kHz)	-	-	300
0.490MHz-1.705MHz	24000/F(kHz)	-	-	30
1.705MHz-30MHz	30	-	-	30
30MHz-88MHz	100	40.0	Quasi-peak	3
88MHz-216MHz	150	43.5	Quasi-peak	3
216MHz-960MHz	200	46.0	Quasi-peak	3
960MHz-1GHz	500	54.0	Quasi-peak	3
Above 1GHz	500	54.0	Average	3

Note: 15.35(b), Unless otherwise specified, the limit on peak radio frequency emissions is 20dB above the maximum permitted average emission limit applicable to the equipment under test. This peak limit applies to the total peak emission level radiated by the device.

Test Setup:	

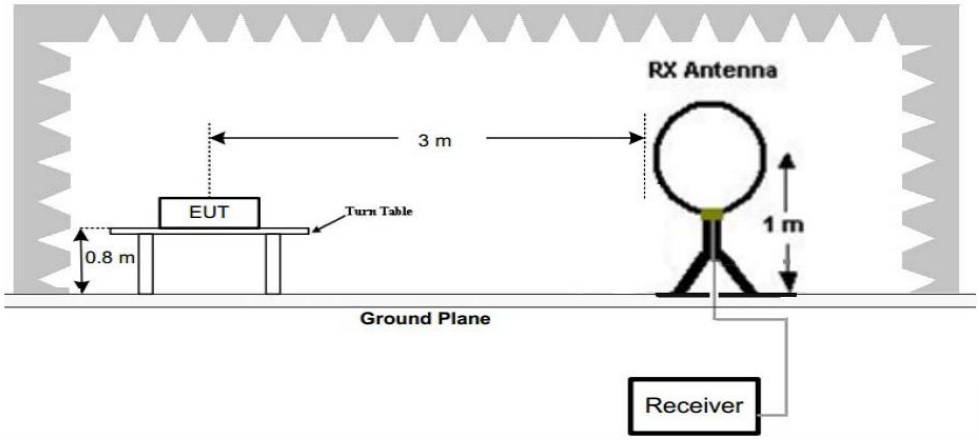

Figure 1. Below 30MHz

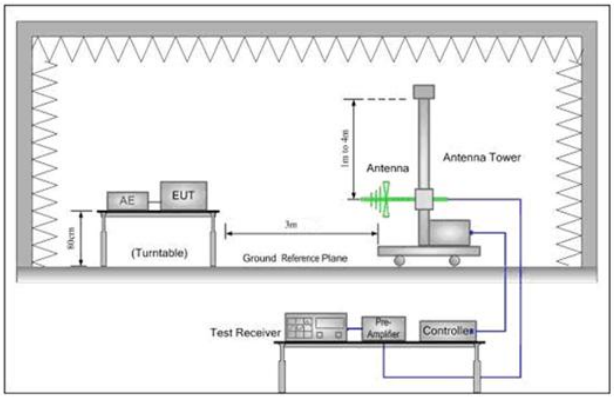

Figure 2. 30MHz to 1GHz

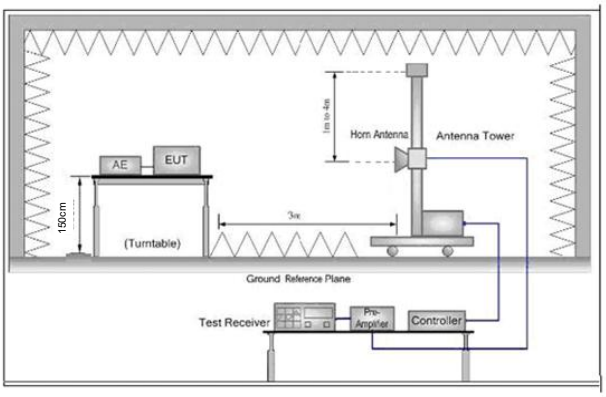

Figure 3. Above 1 GHz

Test Procedure:	a. 1) Below 1G: The EUT was placed on the top of a rotating table 0.8 meters above the ground at a 3 meter semi-anechoic camber. The table was rotated 360 degrees to determine the position of the highest radiation. 2) Above 1G: The EUT was placed on the top of a rotating table 1.5 meters above the ground at a 3 meter semi-anechoic camber. The table was rotated 360 degrees to determine the position of the highest radiation. Note: For the radiated emission test above 1GHz: Place the measurement antenna away from each area of the EUT determined to be a source of emissions at the specified measurement distance, while keeping the measurement antenna aimed at the source of emissions at each frequency of significant emissions, with polarization oriented for maximum response. The measurement antenna may have to be higher or lower than the EUT, depending on the radiation pattern of the emission and staying aimed at the emission source for receiving the maximum signal. The final measurement antenna elevation shall be that which maximizes the emissions. The measurement antenna elevation for maximum emissions shall be restricted to a range of heights of from 1 m to 4 m above the ground or reference ground plane. b. The EUT was set 3 meters away from the interference-receiving antenna, which was mounted on the top of a variable-height antenna tower. c. The antenna height is varied from one meter to four meters above the ground to determine the maximum value of the field strength. Both

	horizontal and vertical polarizations of the antenna are set to make the measurement. d. For each suspected emission, the EUT was arranged to its worst case and then the antenna was tuned to heights from 1 meter to 4 meters (for the test frequency of below 30MHz, the antenna was tuned to heights 1 meter) and the rotatable table was turned from 0 degrees to 360 degrees to find the maximum reading. e. The test-receiver system was set to Peak Detect Function and Specified Bandwidth with Maximum Hold Mode. f. If the emission level of the EUT in peak mode was 10dB lower than the limit specified, then testing could be stopped and the peak values of the EUT would be reported. Otherwise the emissions that did not have 10dB margin would be re-tested one by one using peak, quasi-peak or average method as specified and then reported in a data sheet. g. Test the EUT in the lowest channel (2402MHz),the middle channel (2440MHz),the Highest channel (2480MHz) h. The radiation measurements are performed in X, Y, Z axis positioning for Transmitting mode, and found the X axis positioning which it is the worst case. i. Repeat above procedures until all frequencies measured was complete.
Test Mode:	Refer to clause 5.3
Test Results:	Pass

Radiated Spurious Emission below 1GHz:

During the test, the Radiates Emission from 30MHz to 1GHz was performed in all modes, only the worst case mode a was recorded in the report.

Test Graph of Horizontal:

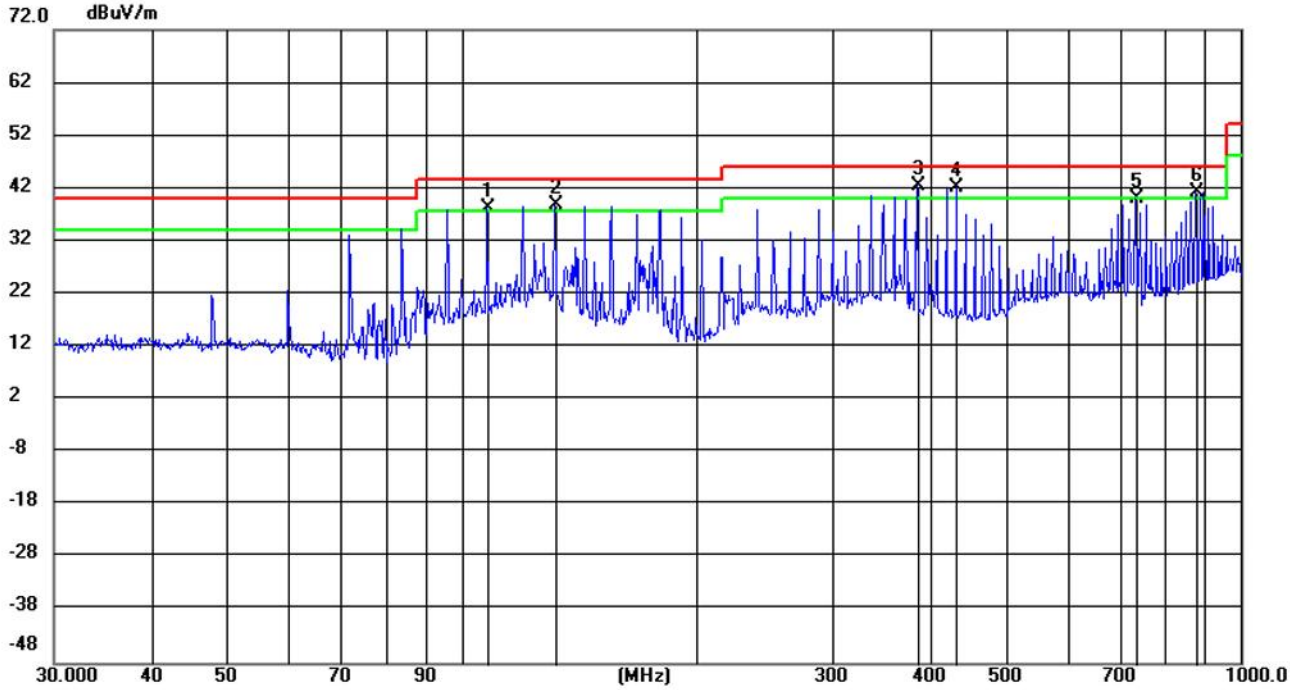

No.	Mk.	Freq.	Reading Level	Correct Factor	Measure-ment	Limit	Margin		Antenna Height	Table Degree	
		MHz	dBuV	dB/m	dBuV/m	dBuV/m	dB	Detector	cm	degree	Comment
1	!	108.0012	25.34	12.97	38.31	43.50	-5.19	QP	200	162	
2	!	132.0120	28.98	9.75	38.73	43.50	-4.77	QP	200	352	
3	*	384.0663	24.65	17.74	42.39	46.00	-3.61	QP	200	352	
4	!	432.0151	23.51	18.62	42.13	46.00	-3.87	QP	100	49	
5	!	732.0485	16.64	23.48	40.12	46.00	-5.88	QP	100	153	
6	!	876.1681	15.80	25.58	41.38	46.00	-4.62	QP	100	290	

Test Graph of Vertical:

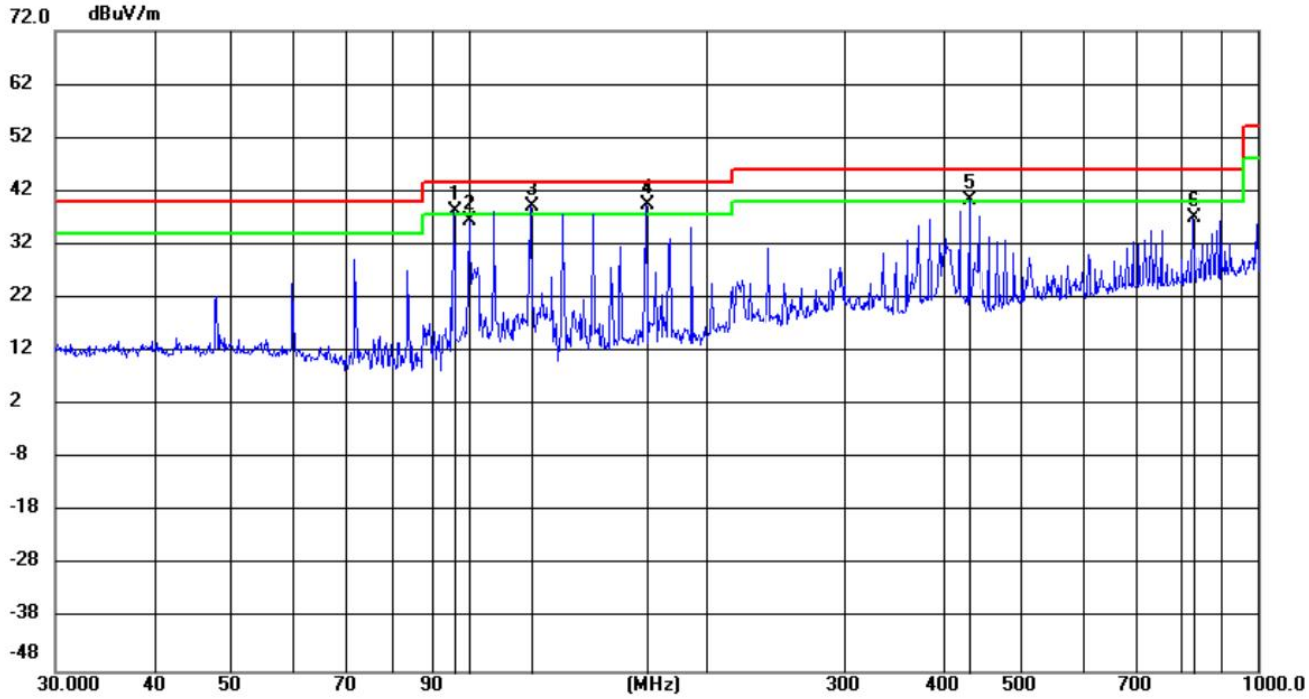

No.	Mk.	Freq.	Reading Level	Correct Factor	Measure-ment	Limit	Margin		Antenna Height	Table Degree	
		MHz	dBuV	dB/m	dBuV/m	dBuV/m	dB	Detector	cm	degree	Comment
1	!	95.9975	25.61	12.57	38.18	43.50	-5.32	QP	100	78	
2		100.4925	23.16	13.16	36.32	43.50	-7.18	QP	100	99	
3	!	120.0027	27.44	11.66	39.10	43.50	-4.40	QP	100	110	
4	*	168.0008	28.39	10.99	39.38	43.50	-4.12	QP	200	268	
5	!	432.0908	21.69	18.62	40.31	46.00	-5.69	QP	100	68	
6		828.0739	12.27	24.90	37.17	46.00	-8.83	QP	100	89	

Radiated Spurious Emission above 1GHz:

Mode:			Bluetooth LE 1Mbps GFSK Transmitting			Channel:		2402 MHz	
NO	Freq. [MHz]	Factor [dB]	Reading [dBμV]	Level [dBμV/m]	Limit [dBμV/m]	Margin [dB]	Result	Polarity	Remark
1	1119.4746	9.40	37.55	46.95	74.00	27.05	PASS	Horizontal	PK
2	1673.7783	12.45	37.48	49.93	74.00	24.07	PASS	Horizontal	PK
3	3360.024	-12.74	53.52	40.78	74.00	33.22	PASS	Horizontal	PK
4	4803.1202	-10.45	61.20	50.75	74.00	23.25	PASS	Horizontal	PK
5	7205.2804	-5.19	62.29	57.10	74.00	16.90	PASS	Horizontal	PK
6	10022.4682	2.66	42.42	45.08	74.00	28.92	PASS	Horizontal	PK
7	7207.2805	-5.15	54.85	49.70	54.00	4.30	PASS	Horizontal	AV
8	1206.9471	8.74	37.47	46.21	74.00	27.79	PASS	Vertical	PK
9	1766.9845	13.44	36.73	50.17	74.00	23.83	PASS	Vertical	PK
10	3321.0214	-13.01	53.73	40.72	74.00	33.28	PASS	Vertical	PK
11	4803.1202	-10.45	61.54	51.09	74.00	22.91	PASS	Vertical	PK
12	7206.2804	-5.17	61.87	56.70	74.00	17.30	PASS	Vertical	PK
13	9612.4408	2.51	43.64	46.15	74.00	27.85	PASS	Vertical	PK
14	7207.2805	-5.15	55.27	50.12	54.00	3.88	PASS	Vertical	AV

Mode:			Bluetooth LE 1Mbps GFSK Transmitting			Channel:		2440 MHz	
NO	Freq. [MHz]	Factor [dB]	Reading [dBμV]	Level [dBμV/m]	Limit [dBμV/m]	Margin [dB]	Result	Polarity	Remark
1	1238.5492	8.61	37.74	46.35	74.00	27.65	PASS	Horizontal	PK
2	1740.9827	13.03	37.39	50.42	74.00	23.58	PASS	Horizontal	PK
3	3673.0449	-12.89	51.62	38.73	74.00	35.27	PASS	Horizontal	PK
4	4879.1253	-9.84	64.17	54.33	74.00	19.67	PASS	Horizontal	PK
5	7319.288	-4.44	61.89	57.45	74.00	16.55	PASS	Horizontal	PK
6	9603.4402	2.63	43.68	46.31	74.00	27.69	PASS	Horizontal	PK
7	4881.1254	-9.81	59.74	49.93	54.00	4.07	PASS	Horizontal	AV
8	7321.2881	-4.43	55.69	51.26	54.00	2.74	PASS	Horizontal	AV
9	1171.2114	9.71	36.84	46.55	74.00	27.45	PASS	Vertical	PK
10	1705.9137	12.94	37.08	50.02	74.00	23.98	PASS	Vertical	PK
11	3591.0394	-13.97	52.75	38.78	74.00	35.22	PASS	Vertical	PK
12	4879.1253	-9.84	64.48	54.64	74.00	19.36	PASS	Vertical	PK
13	7320.288	-4.43	62.11	57.68	74.00	16.32	PASS	Vertical	PK
14	10061.4708	3.23	42.87	46.10	74.00	27.90	PASS	Vertical	PK
15	4881.1254	-9.81	59.16	49.35	54.00	4.65	PASS	Vertical	AV
16	7320.288	-4.43	55.32	50.89	54.00	3.11	PASS	Vertical	AV

Mode:			Bluetooth LE 1Mbps GFSK Transmitting			Channel:		2480 MHz	
NO	Freq. [MHz]	Factor [dB]	Reading [dBμV]	Level [dBμV/m]	Limit [dBμV/m]	Margin [dB]	Result	Polarity	Remark
1	1175.4784	9.57	37.77	47.34	74.00	26.66	PASS	Horizontal	PK
2	1671.6448	12.41	37.23	49.64	74.00	24.36	PASS	Horizontal	PK
3	3483.0322	-14.02	53.05	39.03	74.00	34.97	PASS	Horizontal	PK
4	4960.1307	-13.19	66.27	53.08	74.00	20.92	PASS	Horizontal	PK
5	7439.296	-4.55	60.62	56.07	74.00	17.93	PASS	Horizontal	PK
6	9800.4534	3.39	43.83	47.22	74.00	26.78	PASS	Horizontal	PK
7	7441.2961	-4.56	54.17	49.61	54.00	4.39	PASS	Horizontal	AV
8	1162.9442	9.98	37.05	47.03	74.00	26.97	PASS	Vertical	PK
9	1645.3764	11.99	37.25	49.24	74.00	24.76	PASS	Vertical	PK
10	3517.0345	-14.13	53.63	39.50	74.00	34.50	PASS	Vertical	PK
11	4960.1307	-13.19	66.11	52.92	74.00	21.08	PASS	Vertical	PK
12	7439.296	-4.55	60.85	56.30	74.00	17.70	PASS	Vertical	PK
13	10064.471	3.06	42.29	45.35	74.00	28.65	PASS	Vertical	PK
14	7441.2961	-4.56	53.87	49.31	54.00	4.69	PASS	Vertical	AV

Mode:			Bluetooth LE 2Mbps GFSK Transmitting			Channel:		2402 MHz	
NO	Freq. [MHz]	Factor [dB]	Reading [dBμV]	Level [dBμV/m]	Limit [dBμV/m]	Margin [dB]	Result	Polarity	Remark
1	1223.6149	8.66	37.80	46.46	74.00	27.54	PASS	Horizontal	PK
2	1765.3844	13.40	37.21	50.61	74.00	23.39	PASS	Horizontal	PK
3	3566.0377	-13.35	52.62	39.27	74.00	34.73	PASS	Horizontal	PK
4	4805.1203	-10.45	61.61	51.16	74.00	22.84	PASS	Horizontal	PK
5	7204.2803	-5.22	61.68	56.46	74.00	17.54	PASS	Horizontal	PK
6	9834.4556	2.92	43.95	46.87	74.00	27.13	PASS	Horizontal	PK
7	7208.2806	-5.13	52.86	47.73	54.00	6.27	PASS	Horizontal	AV
8	1209.614	8.72	37.18	45.90	74.00	28.10	PASS	Vertical	PK
9	1655.6437	12.12	36.87	48.99	74.00	25.01	PASS	Vertical	PK
10	3558.0372	-13.15	52.43	39.28	74.00	34.72	PASS	Vertical	PK
11	4805.1203	-10.45	61.69	51.24	74.00	22.76	PASS	Vertical	PK
12	7204.2803	-5.22	61.56	56.34	74.00	17.66	PASS	Vertical	PK
13	9802.4535	3.37	43.36	46.73	74.00	27.27	PASS	Vertical	PK
14	7205.2804	-5.19	53.03	47.84	54.00	6.16	PASS	Vertical	AV

Mode:			Bluetooth LE 2Mbps GFSK Transmitting			Channel:		2440 MHz	
NO	Freq. [MHz]	Factor [dB]	Reading [dBμV]	Level [dBμV/m]	Limit [dBμV/m]	Margin [dB]	Result	Polarity	Remark
1	1228.6819	8.65	36.96	45.61	74.00	28.39	PASS	Horizontal	PK
2	1767.3845	13.45	37.12	50.57	74.00	23.43	PASS	Horizontal	PK
3	3587.0391	-13.87	52.39	38.52	74.00	35.48	PASS	Horizontal	PK
4	4881.1254	-9.81	64.32	54.51	74.00	19.49	PASS	Horizontal	PK
5	7321.2881	-4.43	62.39	57.96	74.00	16.04	PASS	Horizontal	PK
6	9787.4525	3.01	44.01	47.02	74.00	26.98	PASS	Horizontal	PK
7	4880.1253	-9.82	57.13	47.31	54.00	6.69	PASS	Horizontal	AV
8	7322.2882	-4.42	55.28	50.86	54.00	3.14	PASS	Horizontal	AV
9	1215.2143	8.70	37.40	46.10	74.00	27.90	PASS	Vertical	PK
10	1761.9175	13.33	37.23	50.56	74.00	23.44	PASS	Vertical	PK
11	3588.0392	-13.89	53.75	39.86	74.00	34.14	PASS	Vertical	PK
12	4879.1253	-9.84	63.26	53.42	74.00	20.58	PASS	Vertical	PK
13	7321.2881	-4.43	59.64	55.21	74.00	18.79	PASS	Vertical	PK
14	9768.4512	2.43	44.23	46.66	74.00	27.34	PASS	Vertical	PK
15	7322.2882	-4.42	52.74	48.32	54.00	5.68	PASS	Vertical	AV

Mode:			Bluetooth LE 2Mbps GFSK Transmitting			Channel:		2480 MHz	
NO	Freq. [MHz]	Factor [dB]	Reading [dBμV]	Level [dBμV/m]	Limit [dBμV/m]	Margin [dB]	Result	Polarity	Remark
1	1193.0795	8.99	37.96	46.95	74.00	27.05	PASS	Horizontal	PK
2	1723.3816	12.98	38.05	51.03	74.00	22.97	PASS	Horizontal	PK
3	3555.037	-13.08	52.65	39.57	74.00	34.43	PASS	Horizontal	PK
4	4961.1307	-13.17	66.37	53.20	74.00	20.80	PASS	Horizontal	PK
5	7438.2959	-4.55	60.60	56.05	74.00	17.95	PASS	Horizontal	PK
6	9783.4522	2.89	44.14	47.03	74.00	26.97	PASS	Horizontal	PK
7	7442.2962	-4.56	52.89	48.33	54.00	5.67	PASS	Horizontal	AV
8	1190.4127	9.08	37.89	46.97	74.00	27.03	PASS	Vertical	PK
9	1668.1779	12.35	37.60	49.95	74.00	24.05	PASS	Vertical	PK
10	3476.0317	-13.72	52.61	38.89	74.00	35.11	PASS	Vertical	PK
11	4959.1306	-13.22	66.09	52.87	74.00	21.13	PASS	Vertical	PK
12	7438.2959	-4.55	60.56	56.01	74.00	17.99	PASS	Vertical	PK
13	9795.453	3.26	43.87	47.13	74.00	26.87	PASS	Vertical	PK
14	7442.2962	-4.56	52.95	48.39	54.00	5.61	PASS	Vertical	AV

Remark:

1) The field strength is calculated by adding the Antenna Factor, Cable Factor & Preamplifier. The basic equation with a sample calculation is as follows:

   Final Test Level =Receiver Reading + Antenna Factor + Cable Factor – Preamplifier Factor

2) Scan from 9kHz to 25GHz, the disturbance above 10GHz and below 30MHz was very low. As shown in this section, for frequencies above 1GHz, the field strength limits are based on average limits. However, the peak field strength of any emission shall not exceed the maximum permitted average limits specified above by more than 20 dB under any condition of modulation. So, only the peak measurements were shown in the report.

Restricted bands:

Test plot as follows:

EUT_Name		Test_Model	
Test_Mode	BLE 1M GFSK Transmitting	Test_Frequency	2402MHz
Tset_Engineer	Aiden.wang	Test_Date	2024/12/13
Remark	23.5°C56.9%\		

Test Graph

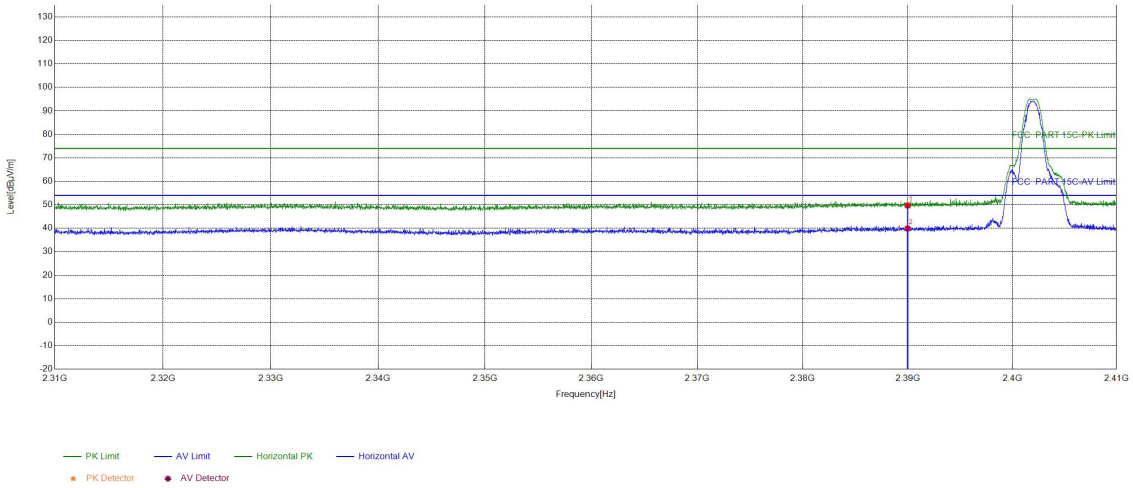

Suspected List									
NO	Freq. [MHz]	Factor [dB]	Reading [dBμV]	Level [dBμV/m]	Limit [dBμV/m]	Margin [dB]	Result	Polarity	Remark
1	2390	15.31	34.37	49.68	74.00	24.32	PASS	Horizontal	PK
2	2390	15.31	24.57	39.88	54.00	14.12	PASS	Horizontal	AV

EUT_Name		Test_Model	
Test_Mode	BLE 1M GFSK Transmitting	Test_Frequency	2402MHz
Tset_Engineer	Aiden.wang	Test_Date	2024/12/13
Remark	23.5°C56.9%\		

Test Graph

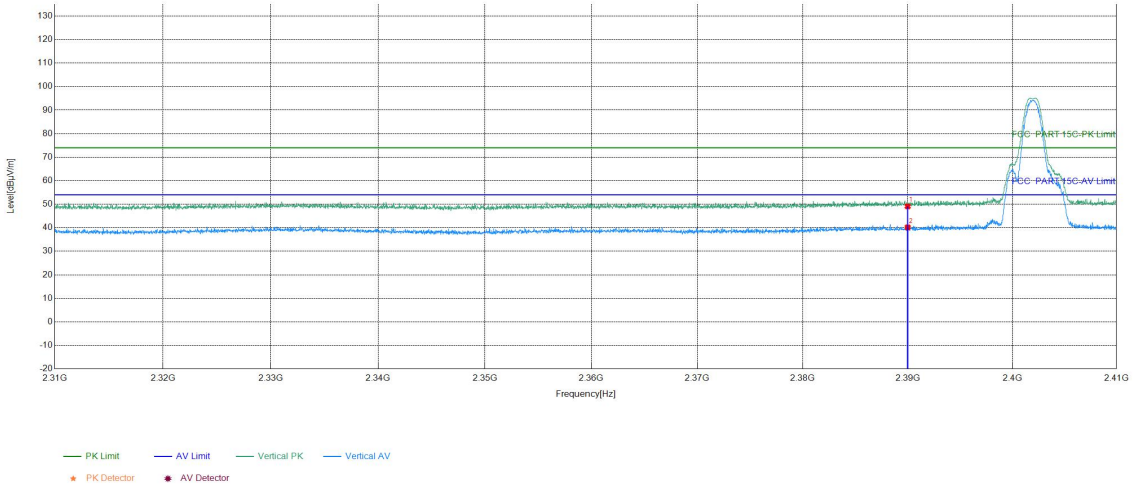

Suspected List									
NO	Freq. [MHz]	Factor [dB]	Reading [dBμV]	Level [dBμV/m]	Limit [dBμV/m]	Margin [dB]	Result	Polarity	Remark
1	2390	15.31	33.77	49.08	54.00	4.92	PASS	Vertical	PK
2	2390	15.31	24.86	40.17	54.00	13.83	PASS	Vertical	AV

EUT_Name		Test_Model	
Test_Mode	BLE 1M GFSK Transmitting	Test_Frequency	2480MHz
Tset_Engineer	Aiden.wang	Test_Date	2024/12/13
Remark	23.5°C56.9%\		

Test Graph

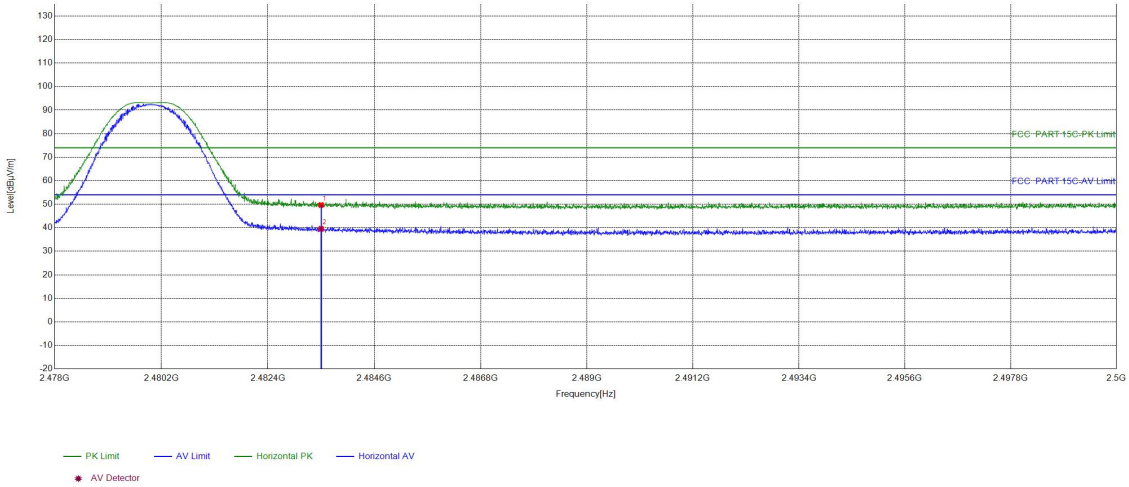

Suspected List									
NO	Freq. [MHz]	Factor [dB]	Reading [dBµV]	Level [dBµV/m]	Limit [dBµV/m]	Margin [dB]	Result	Polarity	Remark
1	2483.5	15.16	34.51	49.67	74.00	24.33	PASS	Horizontal	PK
2	2483.5	15.16	24.40	39.56	54.00	14.44	PASS	Horizontal	AV

EUT_Name		Test_Model	
Test_Mode	BLE 1M GFSK Transmitting	Test_Frequency	2480MHz
Tset_Engineer	Aiden.wang	Test_Date	2024/12/13
Remark	23.5°C56.9%\		

Test Graph

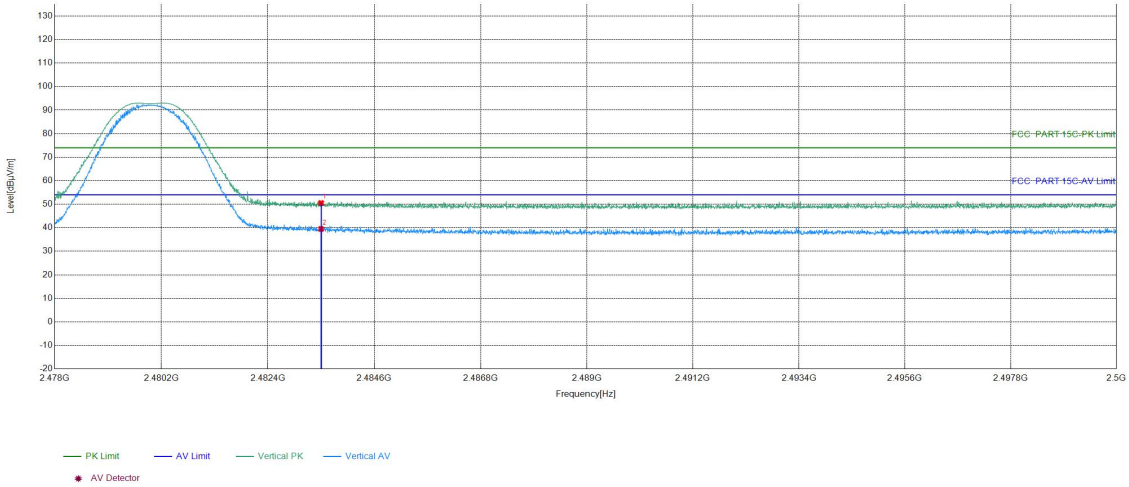

Suspected List									
NO	Freq. [MHz]	Factor [dB]	Reading [dBµV]	Level [dBµV/m]	Limit [dBµV/m]	Margin [dB]	Result	Polarity	Remark
1	2483.5	15.16	35.35	50.51	54.00	3.49	PASS	Vertical	PK
2	2483.5	15.16	24.34	39.50	54.00	14.50	PASS	Vertical	AV

EUT_Name		Test_Model	
Test_Mode	BLE 2M GFSK Transmitting	Test_Frequency	2402MHz
Tset_Engineer	Aiden.wang	Test_Date	2024/12/13
Remark	23.5°C56.9%\		

Test Graph

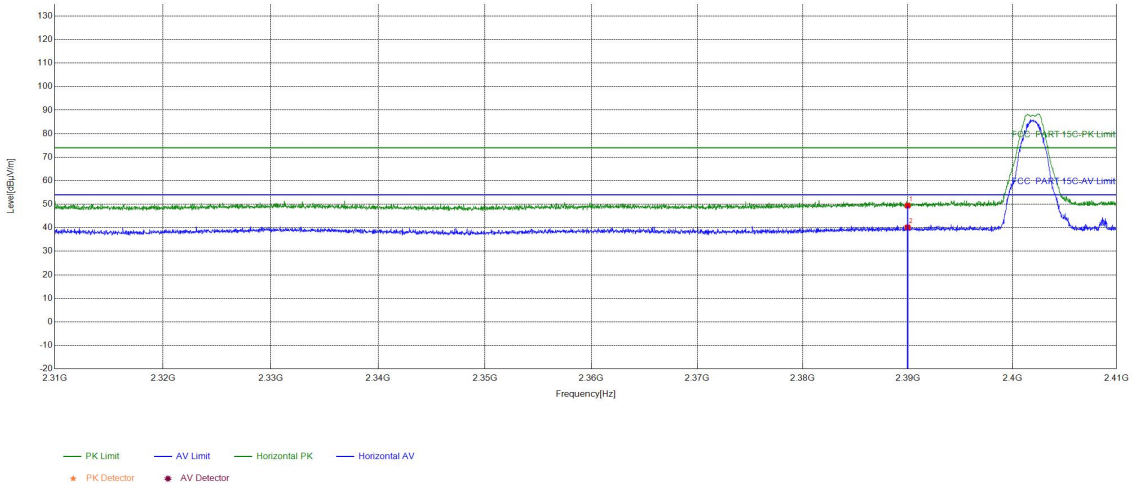

Suspected List									
NO	Freq. [MHz]	Factor [dB]	Reading [dBµV]	Level [dBµV/m]	Limit [dBµV/m]	Margin [dB]	Result	Polarity	Remark
1	2390	15.31	34.10	49.41	74.00	24.59	PASS	Horizontal	PK
2	2390	15.31	24.84	40.15	54.00	13.85	PASS	Horizontal	AV

EUT_Name		Test_Model	
Test_Mode	BLE 2M GFSK Transmitting	Test_Frequency	2402MHz
Tset_Engineer	Aiden.wang	Test_Date	2024/12/13
Remark	23.5°C56.9%\		

Test Graph

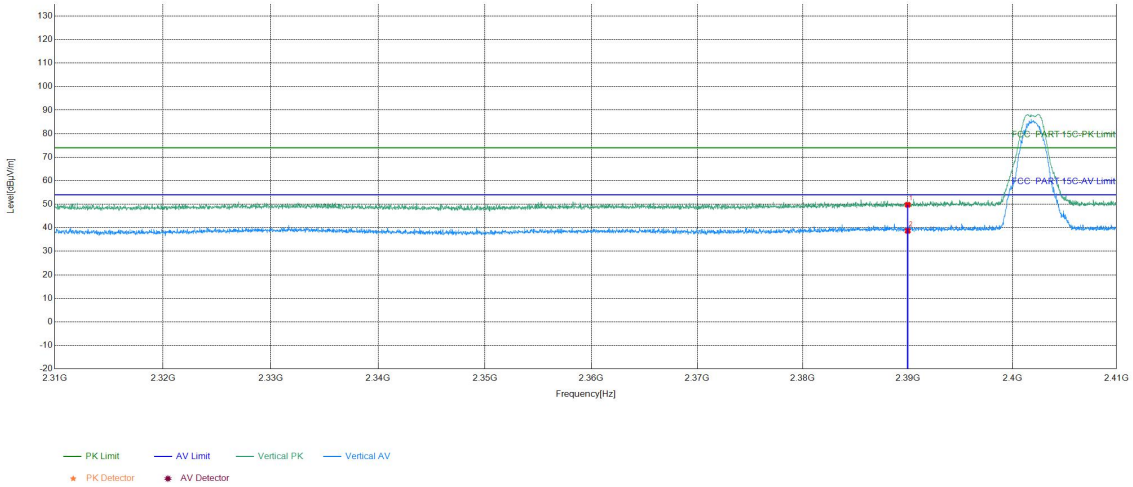

Suspected List									
NO	Freq. [MHz]	Factor [dB]	Reading [dBµV]	Level [dBµV/m]	Limit [dBµV/m]	Margin [dB]	Result	Polarity	Remark
1	2390	15.31	34.45	49.76	54.00	4.24	PASS	Vertical	PK
2	2390	15.31	23.40	38.71	54.00	15.29	PASS	Vertical	AV

EUT_Name		Test_Model	
Test_Mode	BLE 2M GFSK Transmitting	Test_Frequency	2480MHz
Tset_Engineer	Aiden.wang	Test_Date	2024/12/13
Remark	23.5°C56.9%\		

Test Graph

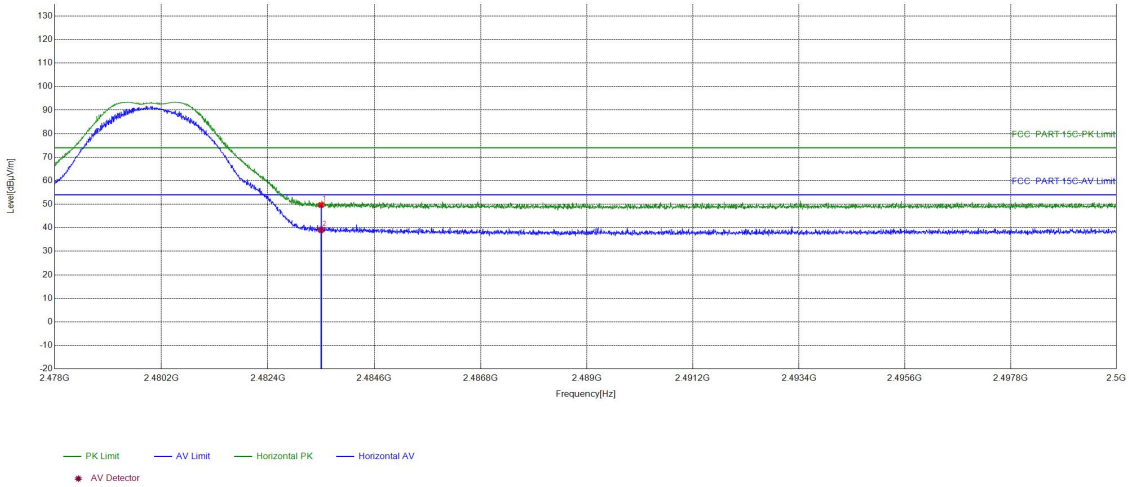

Suspected List									
NO	Freq. [MHz]	Factor [dB]	Reading [dBμV]	Level [dBμV/m]	Limit [dBμV/m]	Margin [dB]	Result	Polarity	Remark
1	2483.5	15.16	34.51	49.67	54.00	4.33	PASS	Horizontal	PK
2	2483.5	15.16	23.84	39.00	54.00	15.00	PASS	Horizontal	AV

EUT_Name		Test_Model	
Test_Mode	BLE 2M GFSK Transmitting	Test_Frequency	2480MHz
Tset_Engineer	Aiden.wang	Test_Date	2024/12/13
Remark	23.5°C56.9%\		

Test Graph

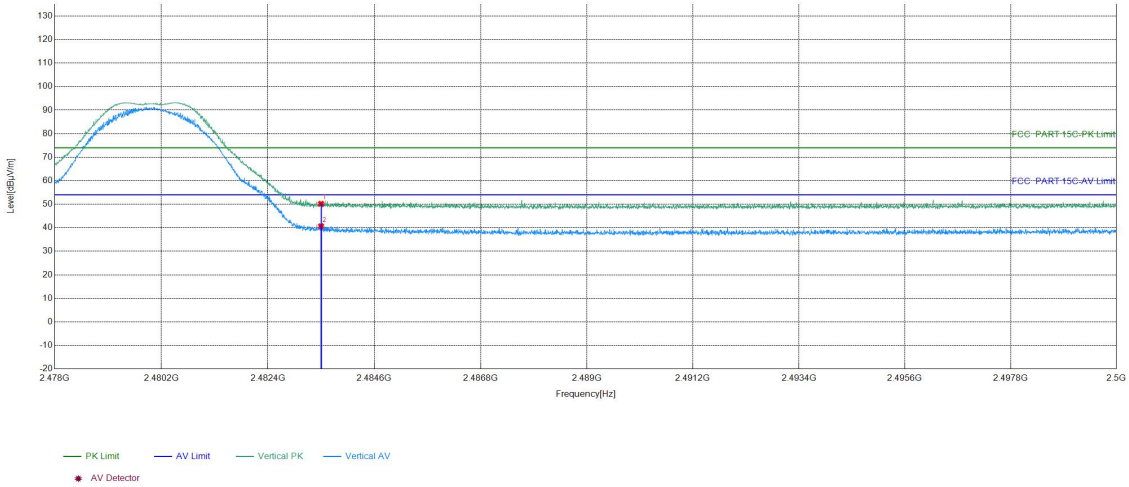

Suspected List									
NO	Freq. [MHz]	Factor [dB]	Reading [dBµV]	Level [dBµV/m]	Limit [dBµV/m]	Margin [dB]	Result	Polarity	Remark
1	2483.5	15.16	35.04	50.20	74.00	23.80	PASS	Vertical	PK
2	2483.5	15.16	25.48	40.64	54.00	13.36	PASS	Vertical	AV

Note:
The field strength is calculated by adding the Antenna Factor, Cable Factor & Preamplifier. The basic equation with a sample calculation is as follows:
Final Test Level =Receiver Reading -Correct Factor
Correct Factor = Preamplifier Factor– Antenna Factor–Cable Factor

7 Appendix A

Refer to Appendix: Bluetooth LE of EED32Q81965001

声明
Statement

1. 检测报告无批准人签字、“专用章”及报告骑缝章无效；
This report is considered invalid without approved signature, special seal and the seal on the perforation;

2. 报告中公司名称及地址、样品及样品信息由申请者提供，申请者应对其真实性负责，CTI 不负责验证其真实性；
The Company Name shown on Report and Address, the sample(s) and sample information was/were provided by the applicant who should be responsible for the authenticity which CTI hasn't verified;

3. 本报告检测结果仅对受测样品负责；
The result(s) shown in this report refer(s) only to the sample(s) tested;

4. 除非另有说明，报告参照 ILAC-G8:09/2019/CNAS-GL015：2022 使用简单接受判定规则进行符合性判定；
Unless otherwise stated,the decision rule for conformity reporting is based on Binary Statement for Simple Acceptance Rule stated in ILAC-G8:09/2019/CNAS-GL015:2022;

5. 未经 CTI 书面同意，不得部分复制本报告；
Without written approval of CTI, this report can't be reproduced except in full;

6. 如检测报告中的英文内容与中文内容有差异，以中文为准。
In case of any discrepancy between the English version and Chinese version of the testing reports (if generated), the Chinese version shall prevail.

*** 报告结束 ***
*** End of Report ***