Shanghai UniOne Science&Technology CO., Ltd.

UT55

Quick Start Guide

① PANEL INDICATORS

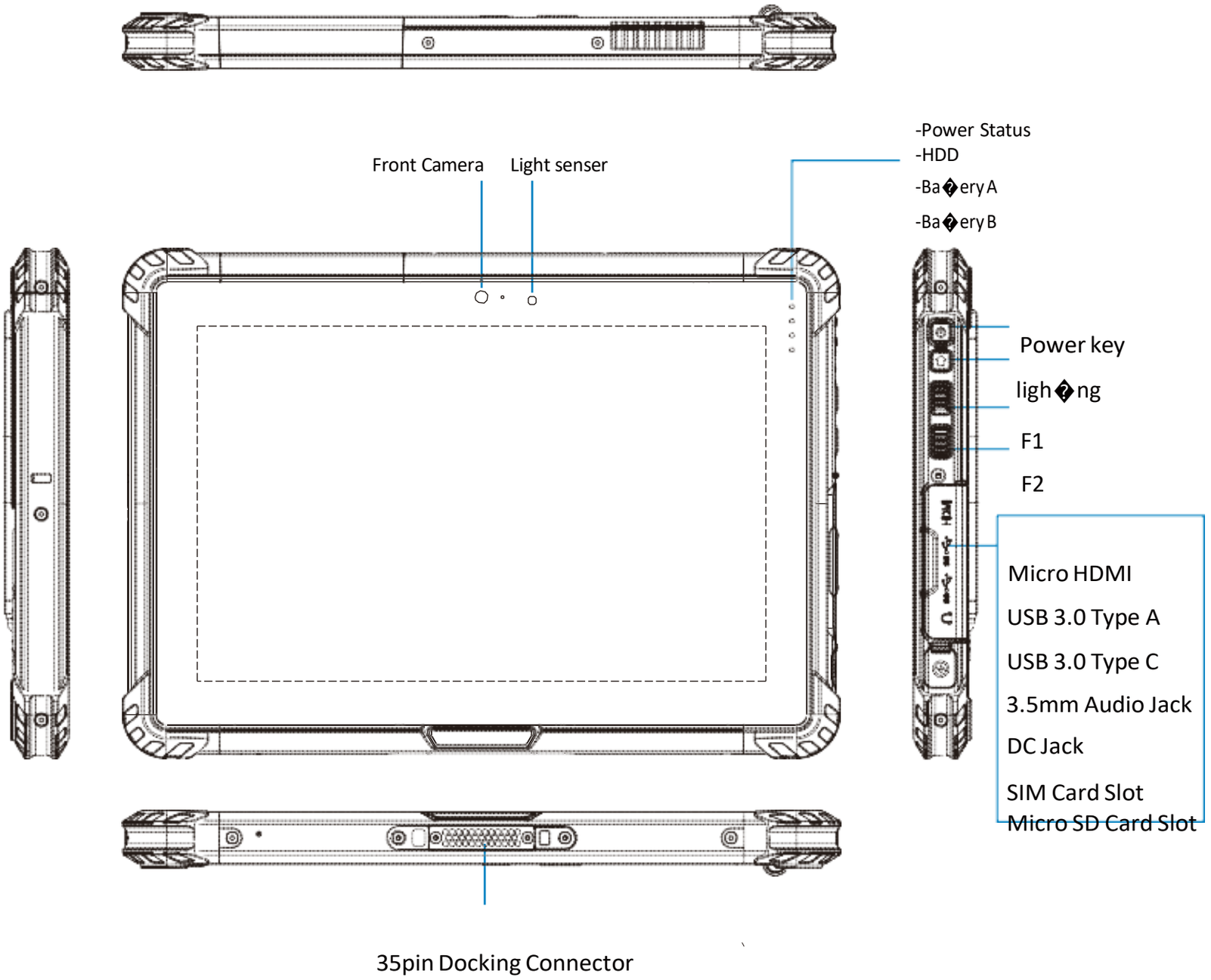

② PANEL INDICATORS

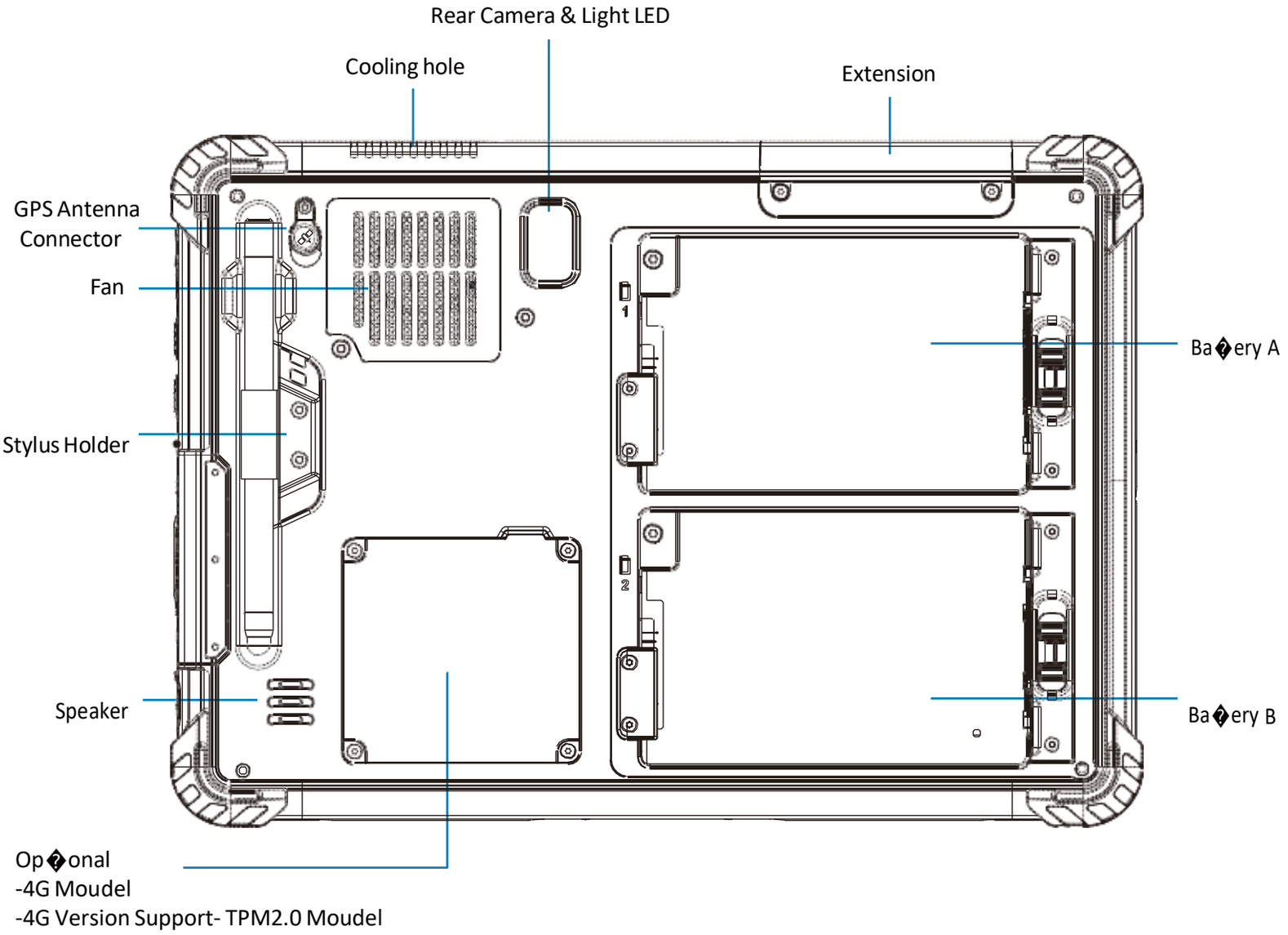

③ I/O COMPARTMENT LAYOUT

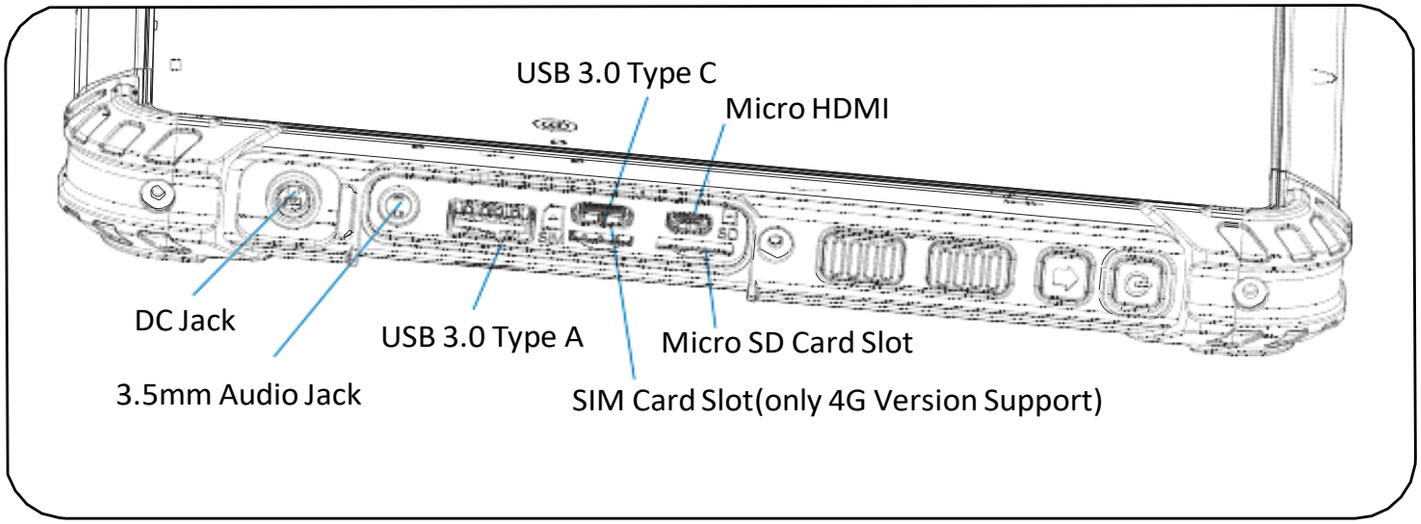

④ INSERT/REMOVE SIM

This is how you insert and remove the micro SD/SIM

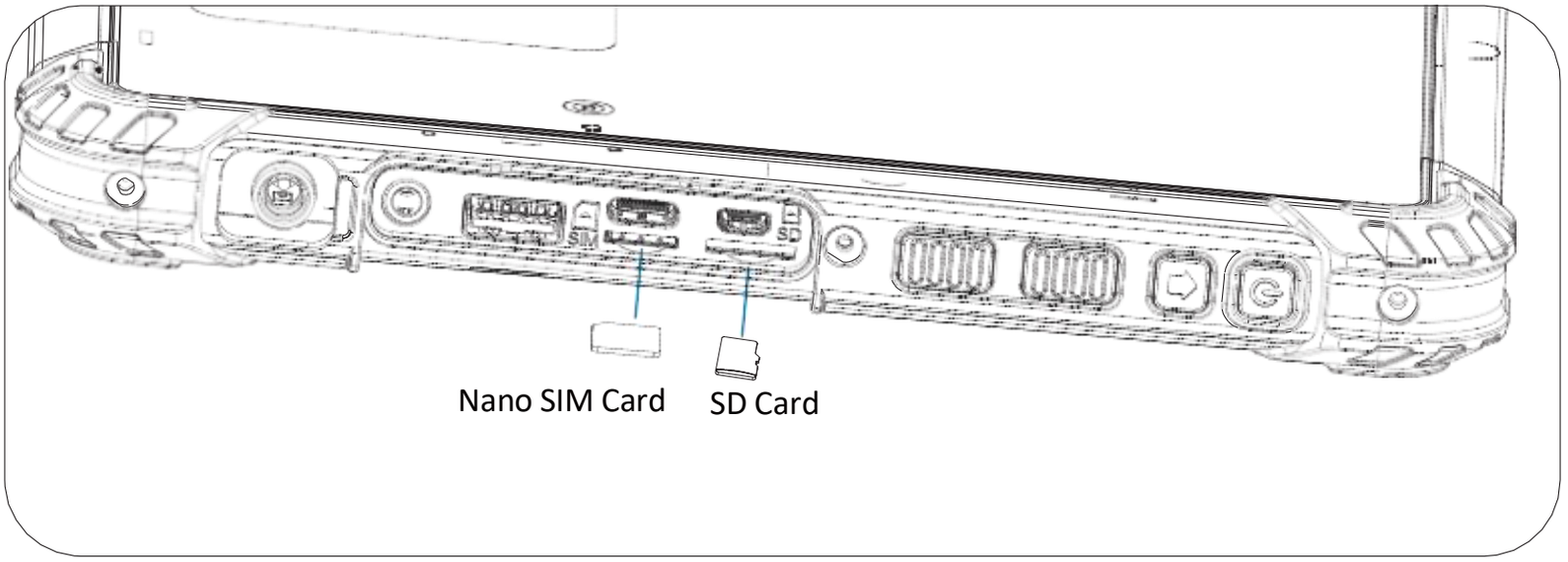

⑤ INSERT/REMOVE SSD

This is how you insert and remove the SSD

You can use a T6 screwdriver to remove the four screws below the nameplate.

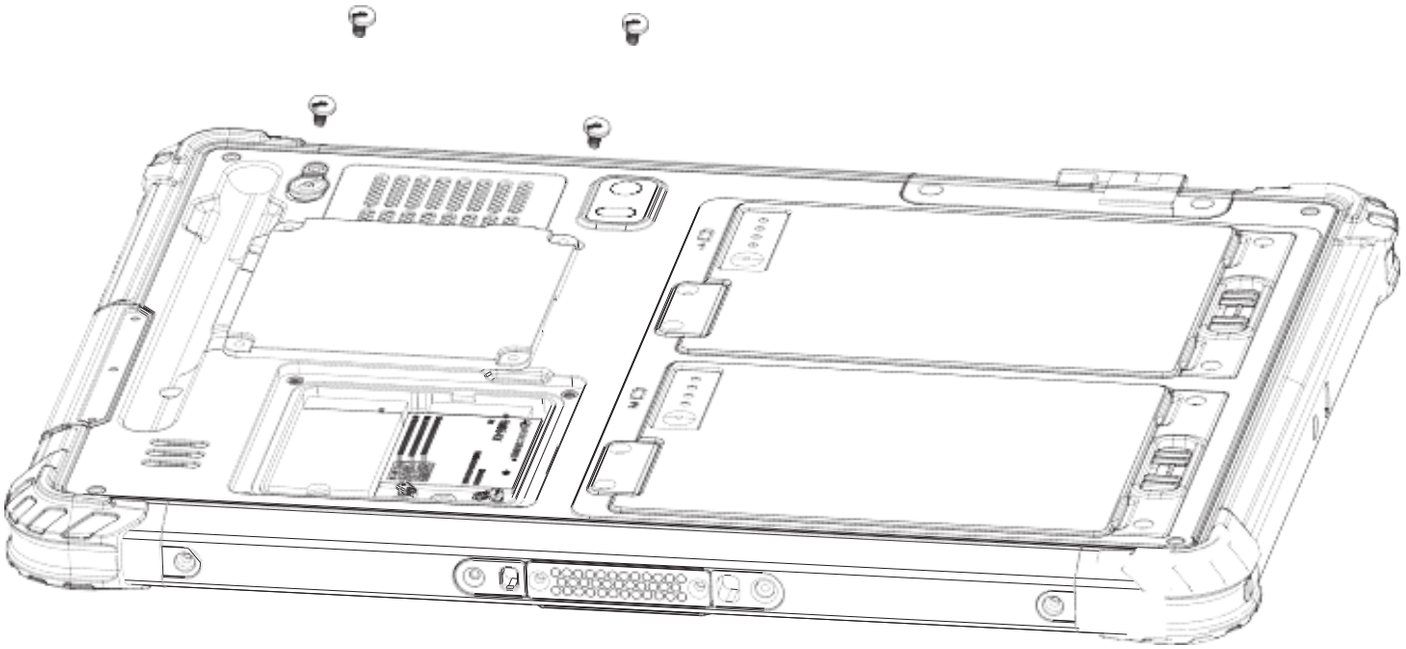

⑥ INSERT/REMOVE BATTERY

This is how you insert and remove the Battery

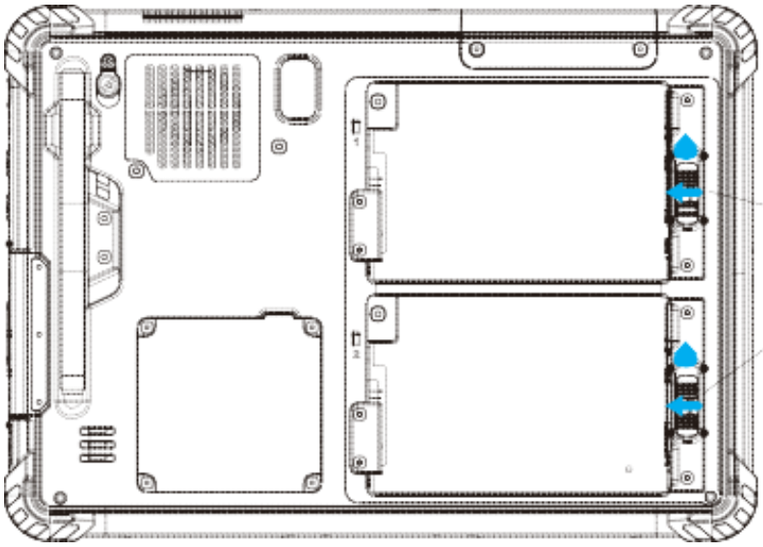

Remove battery from device

Remove the battery and replace it

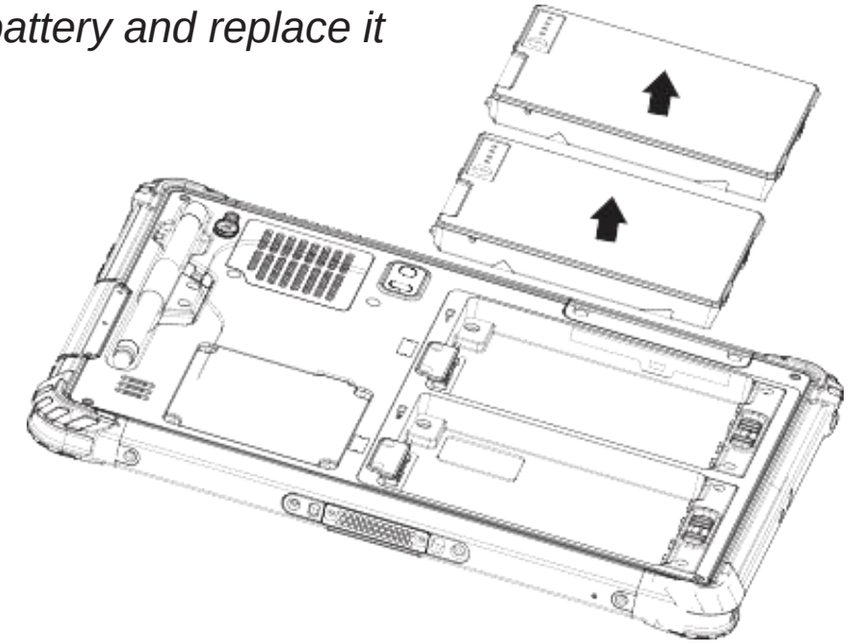

1. Turning the device on and off

To turn on the device, firmly press and hold the bottom right【Power Button】until the boot screen appears.

To turn off the device, Click on the bottom left 【windows icon】 to display the options menu. Select the Power off option to shutdown.

With the device turned on, press the 【Power Button】to turn off the screen and go into sleep mode; Press the 【Power Button】 again to wake the device, swipe upwards on the screen to unlock; If the device has been idle for a period of time, the screen will automatically turn off and go into sleep mode.

2. Home screen operation

- From the home screen, you can view the device status and access the applications.
- At the bottom of the home screen is the status bar,
- which contains the notification area, the status area and the display area; the shortcut panel is at the bottom as shown in Figure 3.
- Customize the shortcut panel
- Using applications The main screen to see all the included applications. Double-click to open applications, Click right Angle X to close applications
- Flat panel mode switch\ network connection\ Set up the
  Click the icon in the lower right corner, Select relevant content respectively as shown in Figure 4.

Figure 3

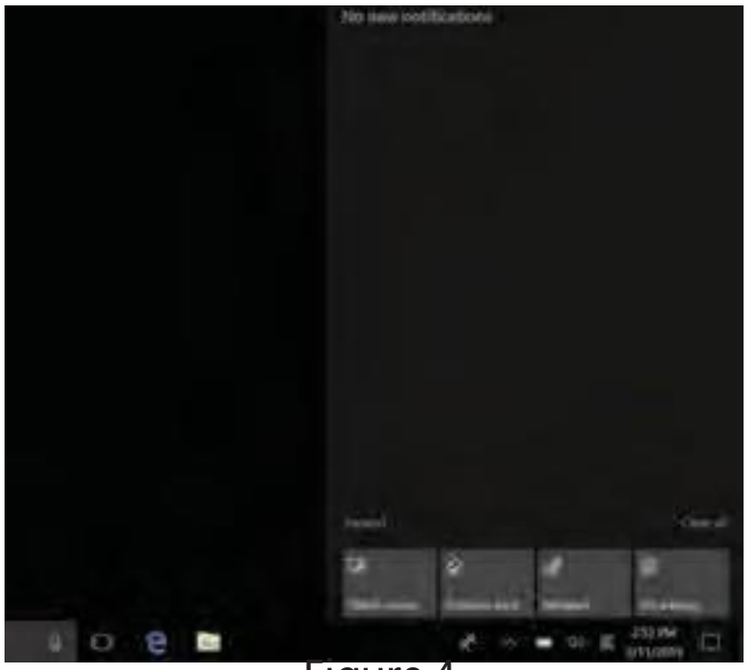

Figure 4

- Fix the application to the start menu/start screen
  How to do it: right-click the application item on the left - select "fix to start screen" on > and the application icon or tile will appear in the right area.
- Fix the application to the taskbar
  Right-click an application item in the start menu - > select "pin to taskbar"
  More content is displayed in the lower left corner of the start menu
  More folders can be displayed in the lower left corner of the start menu, including downloads, music, images, etc
- Find applications quickly in the list of all applications
  Enter the required program in the search box in the lower left corner

Notice

This device is restricted to indoor use where operated in the European.USA and canada Community using frequency in 5150MHz ~ 5250MHz to reduce the potential for interference. Restriction in BE, BG, CZ, DK,DE,EE,IE,EL,ES,FR,HR,IT,CY,LV,LT, LU,HU,MT,NL,AT,PL,PT,RO,SI,SK,FI,SE.

	BE	BG	CZ	DK	DE	EE	IE	EL	ES	FR
	HR	IT	CY	LV	LT	LU	HU	MT	NL	AT
	PL	PT	RO	SI	SK	FI	SE			

Operating Band And Maximum Power
WIFI 2.4GHz 2412-2472MHz（802.11 b, g, n20,n40）: 15.80 dBm
WIFI 5.2GHz 5180-5240MHz（802.11 a, ac20,ac40,ac80, n20,n40）: 21.85 dBm
WIFI 5.8GHz 5745-5825MHz（802.11 a, ac20,ac40,ac80, n20,n40）: 13.12 dBm
Bluetooth-BR&EDR 2402-2480MHz: 4.67 dBm / BLE: 6.04 dBm
GPS RX: 1559-1610MHz
GLONASS RX: 1559-1610MHz
BDS RX: 1559-1610MHz

The SAR limit of EU is 2.0 W/kg averaged over ten gram of tissue. has also been tested against this SAR limit. The highest SAR value reported under this standard during product certification for use when properly worn on the body is 0.404W/kg. This device was tested for typical body-worn operations with the back of the handset kept 0cm from the body. The highest reported SAR for simultaneous transmission use conditions is 0.807 W/kg.

Notice

1. Some special places, such as airports, hospitals, gas stations and other places, do not allow the use of electronic equipment. Please comply with the rules and do not use this product in these places.
2. For your safety and the safety of others, please do not use this product while driving a vehicle.
3. In order to avoid potential safety problems, do not put this product near the vehicle's airbag.
4. For your safety, please do not use this product during thunderstorms.
5. Although this product is waterproof, do not leave this product for long periods of time in areas with water or moisture.
6. This product has an operating temperature range of -20°C~+55°C and a storage temperature range of -30°C~+70°C. Extreme temperatures can affect the device's performance and service life.
7. Please use an original rechargeable lithium battery. Low-quality batteries will affect the performance and service life of the device, and may even have the danger of explosion.
8. Although the product has been tested to withstand harsh operating environments, do use the product in an improper manner.
9. Please do not disassemble this product. In case of failure, please send to our authorized service centres to proceed with repairs.
10. After the device has reached the end of its service life, please discard in a proper way to avoid environmental pollution.
11. When replacing the battery or during the use of an external power supply, shut down the device completely before removing the battery or disconnecting the external power supply to prevent damage.
12. This product is a Class B product, which may cause radio interference. The user may be required to take necessary preventive measures.

Battery Instructions

1. This product uses a rechargeable lithium battery as a power source. When the power is low, please charge the battery. To maintain battery life, it is recommended to deplete the battery's power before charging.
2. When the battery charger is not in use, please remove it from the power supply. Do not connect the charger to the battery for more than one week. Excessive charging will shorten the battery life.
3. Temperature affects the battery charging limit. Therefore, the battery may need to be cooled or warmed up before charging.
4. Please use the battery for its original intended purpose to prevent short-circuiting the battery. A short circuit will occur when a conductive material connects the battery's positive and negative terminals.
5. Do not use a battery that is damaged.
6. Placing the battery in extremely cold or hot places will lead to shortened battery life. Exposing the battery to extreme temperatures may cause the phone to malfunction, even if the battery is fully charged.
7. Do not put the battery in a fire. Please discard the battery in a proper manner or take the battery to a battery recycling station. Please dispose waste batteries in accordance with local laws and regulations.

Manufacturer：Shanghai UniOne Science&Technology CO., Ltd.
Building 4,No.651 Wanfang Road, Pujiang Town, Minhang District, Shanghai

NOTICE: The SAR limit of FCC and ISED is 1.6 W/kg averaged over one gram of tissue.

Device types UT55(FCC ID: 2A96I-UT55) has also been tested against this limit. The highest SAR value reported under this standard during product certification for use on the body is 0.795 W/kg, and 1.383 W/kg for simultaneous transmission use conditions. This device was tested for typical body - worn operations with the back of the Device Keep 0 cm from the body. To maintain compliance with FCC and ISED RF exposure require-ments,use accessories that maintain a 0 cm separation distance between the user's body and the back of the Device . The use of belt clips, holsters and similar accessories should not contain metallic components in its assembly. The use of accessories that do not satisfy these requirements may not comply with FCC and ISED RF exposure requirements, and should be avoided.

Working Temperature: -20℃ ~ +55℃
Storage Temperature: -30℃ ~ +70℃

Charging mode need to operate indoors, please pay attention to the environment temperature should be -0℃ ~ +40℃

CAUTION RISK OF EXPLOSION IF BATTERY IS REPLACED BY AN INCORRECT TYPE.
DISPOSE OF USED BATTERIES ACCORDING TO THE INSTRUCTIONS

Hereby, [Shanghai UniOne Science&Technology CO., Ltd.] declares that the radio equipment type [UT55] is in compliance with Directive 2014 / 53 /EU.
The full text of the EU declaration of conformity is available at the following internet address:
http://en.unistrong.com/declaration.html

NOTICE:

This device complies with Part 15 of the FCC Rules and with RSS-210 of Industry Canada. Operation is subject to the following two conditions:

(1) this device may not cause harmful interference, and

(2) this device must accept any interference received, including interference that may cause undesired operation.

Le présent appareil est conforme aux CNR d'Industrie Canada applicables aux appareils radio exempts de licence. L'exploitation est autorisée aux deux conditions suivantes : (1) l'appareil ne doit pas produire de brouillage, et (2) l'utilisateur de l'appareil doit accepter tout brouillage radioélectrique subi, même si le brouillage est susceptible d'en compromettre le fonctionnement.

NOTICE:

Changes or modifications made to this equipment not expressly approved by Shenzhen UniStrong

Science & Technology Co.,Ltd. may void the FCC authorization to operate this equipment.

NOTE: This equipment has been tested and found to comply with the limits for a Class B digital device, pursuant to Part 15 of the FCC Rules. These limits are designed to provide reasonable protection against harmful interference in a residential installation. This equipment generates, uses and can radiate radio frequency energy and, if not installe d and used in accordance with the instructions, may cause harmful interference to radio communications. However, there is no guarantee that interference will not occur in a particular installation. If this equipment does cause harmful interference to radio or television reception, which can be determined by turning the equipment off and on, the user is encouraged to try to correct the interference by one or more of the following measures:

Reorient or relocate the receiving antenna.

Increase the separation between the equipment and receiver.

Connect the equipment into an outlet on a circuit different from that to which the receiver is connected.

Consult the dealer or an experienced radio/TV technician for help.

NOTICE:

This Class [B] digital apparatus complies with Canadian ICES -003.

Cet appareil numérique de la classe [B] est conforme à la norme NMB - 003 du Canada.

RF mode and power tune-up refer to appendix A

www.Unione-rugged.com