Radio Test Report

Report No.: CTA231220002W10

Issued for

Shanghai UniOne Science&Technology CO., Ltd.

Building 4, No.651 Wanfang Road, Pujiang Town, Minhang District, Shanghai, China.

Product Name:	Rugged Windows Tablet
Brand Name:	N/A
Model Name:	GTW6101
Series Model(s):	N/A
FCC ID:	2A96IGTW6101
Test Standards:	FCC Part15.407

Any reproduction of this document must be done in full. No single part of this document may be reproduced without permission from CTA, all test data presented in this report is only applicable to presented test sample.

TEST REPORT

Applicant's Name..... : Shanghai UniOne Science&Technology CO., Ltd.

Address ..... : Building 4, No.651 Wanfang Road, Pujiang Town, Minhang District, Shanghai, China.

Manufacturer's Name ..... : Shanghai UniOne Science&Technology CO., Ltd.

Address ..... : Building 4, No.651 Wanfang Road, Pujiang Town, Minhang District, Shanghai, China.

Product Description

Product Name..... : Rugged Windows Tablet

Brand Name..... : N/A

Model Name ..... : GTW6101

Series Model(s) ..... : N/A

Test Standards ..... : FCC Part15.407

Test Procedure..... ANSI C63.10-2013

This device described above has been tested by CTA, the test results show that the equipment under test (EUT) is in compliance with the FCC requirements. And it is applicable only to the tested sample identified in the report.
This report shall not be reproduced except in full, without the written approval of CTA, this document only be altered or revised by CTA, personal only, and shall be noted in the revision of the document.

Date of Test .....:

Date of receipt of test item .....: 07 Sept. 2023

Date (s) of performance of tests .....: 07 Sept. 2023 ~ 21 Sept. 2023

Date of Issue.....: 21 Sept. 2023

Test Result.....: **Pass**

Testing Engineer : Zoey Cao

(Zoey Cao)

Technical Manager : Amy Wen

(Amy Wen)

Authorized Signatory : Eric Wang

(Eric Wang)

Table of Contents **Page**

1 . SUMMARY OF TEST RESULTS **6**
1.1 TEST FACTORY 7
SHENZHEN CTA TESTING TECHNOLOGY CO., LTD. 7
1.2 MEASUREMENT UNCERTAINTY 7
2 . GENERAL INFORMATION **8**
2.1 GENERAL DESCRIPTION OF THE EUT 8
2.2 DESCRIPTION OF TEST MODES 9
2.3 TEST SOFTWARE AND POWER LEVEL 11
2.4 BLOCK DIAGRAM SHOWING THE CONFIGURATION OF SYSTEM TESTED 12
2.5 DESCRIPTION OF NECESSARY ACCESSORIES AND SUPPORT UNITS 13
2.6 EQUIPMENTS LIST FOR ALL TEST ITEMS 14
3 . EMC EMISSION TEST **16**
3.1 CONDUCTED EMISSION MEASUREMENT 16
3.2 RADIATED EMISSION AND (BANDEDGE) MEASUREMENT 20
4.1 LIMIT 33
4.2 TEST PROCEDURE 33
4.3 DEVIATION FROM STANDARD 34
4.4 TEST SETUP 34
4.5 EUT OPERATION CONDITIONS 34
4.6 TEST RESULTS 34
5. BANDWIDTH MEASUREMENT **35**
5.1 EMISSION BANDWIDTH (EBW) 26 BANDWID PROCEDURES / LIMIT 35
5.2 OCCUPIED BANDWIDTH (99%) TEST APPLIED PROCEDURES / LIMIT 36
5.3 MINIMUM EMISSION BANDWIDTH(6 DB) PROCEDURES / LIMIT 37
6. MAXIMUM CONDUCTED OUTPUT POWER **38**
6.1 LIMIT 38
6.2 TEST PROCEDURE 38
6.3 DEVIATION FROM STANDARD 38
6.4 TEST SETUP 38
6.5 EUT OPERATION CONDITIONS 38
6.6 TEST RESULTS 38
7. AUTOMATICALLY DISCONTINUE TRANSMISSION **39**
7.1 LIMIT OF AUTOMATICALLY DISCONTINUE TRANSMISSION 39
7.2 TEST RESULT OF AUTOMATICALLY DISCONTINUE TRANSMISSION 39
8. ANTENNA REQUIREMENT **40**

Table of Contents **Page**

8.1 STANDARD REQUIREMENT 40
8.2 EUT ANTENNA 40
APPENDIX - PHOTOS OF TEST SETUP **41**

Revision History

Rev.	Issue Date	Report No.	Effect Page	Contents
00	21 Sept. 2023	CTA231220002W10	ALL	Initial Issue

1. SUMMARY OF TEST RESULTS

Test procedures according to the technical standards:
§ 15.407,KDB 789033 D02 General U-NII Test Procedures New Rules v02r01

FCC Part 15.407		
FCC standard	Test Item	Results
15.207	AC Conducted Emission	PASS
15.407 (a) /15.407 (e)	26dB/6dB &99% Bandwidth	PASS
15.407(a)	Maximum Conducted Output Power	PASS
15.407(b)/15.205/15.209	Radiated Emission And (bandedge Emissions) Measurement	PASS
15.407(a)	Power Spectral Density	PASS
15.407(c)	Automatically Discontinue Transmission	PASS
15.203/15.204	Antenna Requirement	PASS

NOTE:

(1) 'N/A' denotes test is not applicable in this Test Report.
(2) All tests are according to ANSI C63.10-2013.

1.1 TEST FACTORY

SHENZHEN CTA TESTING TECHNOLOGY CO., LTD.
ROOM 106, BUILDING 1, YIBAOLAI INDUSTRIAL PARK, QIAOTOU COMMUNITY,FUHAI STREET, BAO'AN DISTRICT, SHENZHEN, CHINA
FCC TEST FIRM REGISTRATION NUMBER: 517856
IC TEST FIRM REGISTRATION NUMBER: 27890
A2LA CERTIFICATE NO.: 6534.01
IC CAB ID: CN0127

1.2 MEASUREMENT UNCERTAINTY

The reported uncertainty of measurement **y** ± **U**, where expended uncertainty **U** is based on a standard uncertainty multiplied by a coverage factor of **k=2**, providing a level of confidence of approximately **95** %.

Test	Range	Measurement Uncertainty
Radiated Emission	30~1000MHz	4.06 dB
Radiated Emission	1~18GHz	5.14 dB
Radiated Emission	18-40GHz	5.38 dB
Conducted Disturbance	0.15~30MHz	2.14 dB
Output Peak power	30MHz~18GHz	0.55 dB
Power spectral density	/	0.57 dB
Spectrum bandwidth	/	1.1%
Radiated spurious emission (30MHz-1GHz)	30~1000MHz	4.10 dB
Radiated spurious emission (1GHz-18GHz)	1~18GHz	4.32 dB
Radiated spurious emission (18GHz-40GHz)	18-40GHz	5.54 dB

2. GENERAL INFORMATION

2.1 GENERAL DESCRIPTION OF THE EUT

<table>
<tr><td>Product Name</td><td>Rugged Windows Tablet</td></tr>
<tr><td>Brand Name</td><td>N/A</td></tr>
<tr><td>Model Name</td><td>GTW6101</td></tr>
<tr><td>Series Model(s)</td><td>N/A</td></tr>
<tr><td>Model Difference</td><td>N/A</td></tr>
<tr><td>Product Description</td><td>The EUT is a Rugged Windows Tablet
<table>
<tr><td rowspan="2">Operation Frequency:</td><td>IEEE 802.11a/ n(HT20)/ac(VHT20): 5.180GHz-5.240GHz
IEEE 802.11n(HT40)/ac(VHT40): 5.190GHz-5.230GHz
IEEE 802.11ac(VHT80): 5.210GHz</td></tr>
<tr><td>IEEE 802.11a/ n(HT20)/ac(VHT20): 5.745GHz-5.825GHz
IEEE 802.11a/ n(HT40)/ac(VHT40): 5.755GHz-5.795GHz
IEEE 802.11ac(VHT80): 5.775GHz</td></tr>
<tr><td>Modulation Type:</td><td>802.11a(OFDM): BPSK,QPSK,16-QAM,64-QAM
802.11n(OFDM): BPSK,QPSK,16-QAM,64-QAM
802.11ac(OFDM): BPSK,QPSK,16-QAM,64-QAM,256-QAM</td></tr>
<tr><td>Antenna Type:</td><td>FPC</td></tr>
<tr><td>Antenna Gain (dBi):</td><td>5.2G WLAN:
ANT 1:3.54 dBi ANT 2:1.12 dBi
MIMO 1+2:5.42 dBi
5.8G WLAN:
ANT 1:0.54 dBi ANT 2:1.53 dBi
MIMO 1+2:4.06</td></tr>
<tr><td>Max.Output Power(Conducted):</td><td>5.2G WLAN:15.19 dBm
5.8G WLAN:15.87dBm</td></tr>
</table>
More details of EUT technical specification, please refer to the User Manual.</td></tr>
<tr><td>Test Channel</td><td>Please refer to the Note 3.</td></tr>
<tr><td>Rating</td><td>Input: DC20V, 3.25A</td></tr>
<tr><td>Battery</td><td>Rated Voltage:7.6V
Charge Limit Voltage:8.7V
Capacity: 4500mAh</td></tr>
<tr><td>Hardware version number</td><td>E7251LG3_MAIN_V3.0</td></tr>
<tr><td>Software version number</td><td>N/A</td></tr>
<tr><td>Connecting I/O Port(s)</td><td>Please refer to the Note 1.</td></tr>
</table>

Note

1. For a more detailed features description, please refer to the manufacturer's specifications or the User Manual.
2. The antenna information refer the manufacturer provide report, applicable only to the tested sample identified in the report. Due to the incorrect antenna information, a series of problems such as the accuracy of the test results will be borne by the customer.

3.

Operation Frequency of channel			
5.180GHz-5.240GHz		5.745GHz-5.825GHz	
Channel	Frequency	Channel	Frequency
36	5180	149	5745
38	5190	151	5755
40	5200	153	5765
42	5210	157	5785
44	5220	159	5795
46	5230	161	5805
48	5240	165	5825

Note:
In section 15.31(m), regards to the operating frequency range over 10 MHz, the Lowest frequency, the middle frequency, and the highest frequency of channel were selected to perform the test, and the selected channel see below:
Carrier Frequency Channel

5GHz:

For 802.11a/n(HT20)/ac(VHT20)			
Channel	Freq.(MHz)	Channel	Freq.(MHz)
36	5180	149	5745
40	5200	157	5785
48	5240	165	5825

For 802.11 n(HT40)/ac(VHT40)			
Channel	Freq.(MHz)	Channel	Freq.(MHz)
38	5190	151	5755
46	5230	159	5795

For 802.11ac (VHT80)			
Channel	Freq.(MHz)	Channel	Freq.(MHz)
42	5210	155	5775

3. KDB 662911 D01 Multiple Transmitter Output v02r01
2) Directional Gain Calculations for In-Band Measurements
a) Basic methodology with NANT transmit antennas, each with the same directional gain GA NT dBi, being driven by NANT transmitter outputs of equal power. Directional gain is to be co mputed as follows:
(i) If any transmit signals are correlated with each other,
Directional gain = GANT + 10 log(NANT) dBi
(ii) If all transmit signals are completely uncorrelated with each other,
Directional gain = GANT
${ Directional gain}dBi

2.2 DESCRIPTION OF TEST MODES

To investigate the maximum EMI emission characteristics generates from EUT, the test system was pre-scanning tested base on the consideration of following EUT operation mode or test configuration mode which possible have effect on EMI emission level. Each of these EUT operation mode(s) or test configuration mode(s) mentioned above was evaluated respectively.

Worst Mode	Description	Data Rate
Mode 1	TX IEEE 802.11a HT20 CH36&CH40&CH48	6 Mbps
Mode 2	TX IEEE 802.11a HT20 CH149&CH157&CH165	6 Mbps
Mode 3	TX IEEE 802.11n HT20 CH36&CH40&CH48	MCS 0
Mode 4	TX IEEE 802.11ac VHT20 CH36&CH40&CH48	NSS1 MCS0
Mode 5	TX IEEE 802.11n HT20 CH149&CH157&CH165	MCS 0
Mode 6	TX IEEE 802.11ac VHT20 CH149&CH157&CH165	NSS1 MCS0
Mode 7	TX IEEE 802.11n HT40 CH38&CH46	MCS 0
Mode 8	TX IEEE 802.11ac VHT40 CH38&CH46	NSS1 MCS0
Mode 9	TX IEEE 802.11n HT40 CH151&CH159	MCS 0
Mode 10	TX IEEE 802.11ac VHT40 CH151&CH159	NSS1 MCS0
Mode 11	TX IEEE 802.11ac VHT80 CH42	NSS1 MCS0
Mode 12	TX IEEE 802.11ac VHT80 CH155	NSS1 MCS0

Note: (1) The measurements are performed at the highest, middle, lowest available channels.
(2) The measurements are performed at all Bit Rate of Transmitter, the worst data was reported.
(3) We have be tested for all avaiable U.S. voltage and frequencies(For 120V,50/60Hz and 240V, 50/60Hz) for which the device is capable of operation.
(4) The battery is fully-charged during the radited and RF conducted test.

AC Conducted Emission

Test Case	
AC Conducted Emission	Mode 13: Keeping TX + WLAN Link

2.3 TEST SOFTWARE AND POWER LEVEL

During testing channel & power controlling software provided by the customer was used to control the operating channel as well as the output power level.

RF Function	Type	Mode Or Modulation type	ANT Gain(dBi)	ANT_1 Power Class	ANT_2 Power Class	Software For Testing
WIFI(5G)	U-NII-1 (5150MHz-5250MHz)	802.11a	ANT 1: 3.54 ANT 2: 1.12 MIMO 1+2:5.42	15	15	DRTU
		802.11n(HT20)		14	14	
		802.11n(HT40)		10	10	
		802.11ac(VHT20)		14	14	
		802.11ac(VHT40)		10	10	
		802.11ac(VHT80)		10	10	
RF Function	Type	Mode Or Modulation type	ANT Gain(dBi)	ANT_1 Power Class	ANT_2 Power Class	Software For Testing
WIFI(5G)	U-NII-3 (5725MHz-5895MHz)	802.11a	ANT 1: 0.54 ANT 2: 1.53 MIMO 1+2 :4.06	15	15	DRTU
		802.11n(HT20)		15	15	
		802.11n(HT40)		15	15	
		802.11ac(VHT20)		15	15	
		802.11ac(VHT40)		15	15	
		802.11ac(VHT80)		15	15	

2.4 BLOCK DIAGRAM SHOWING THE CONFIGURATION OF SYSTEM TESTED

Radiated Spurious EmissionTest

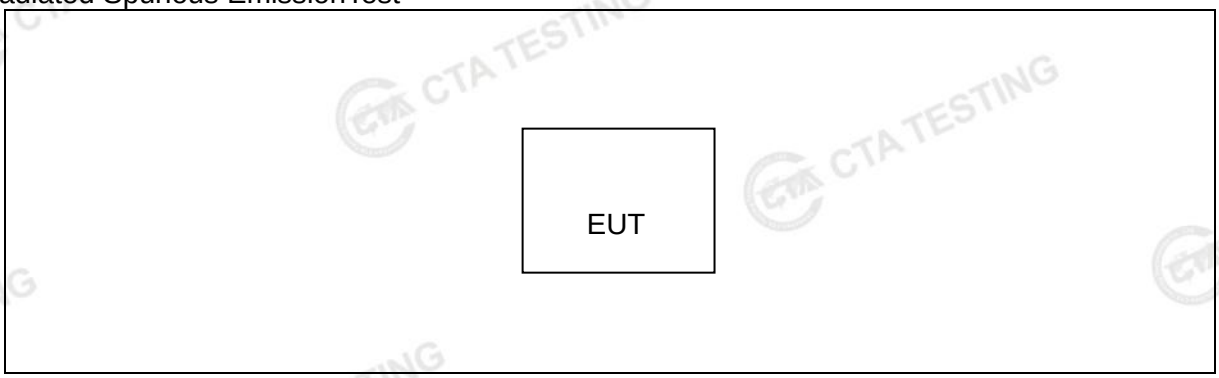

Conducted Emission Test

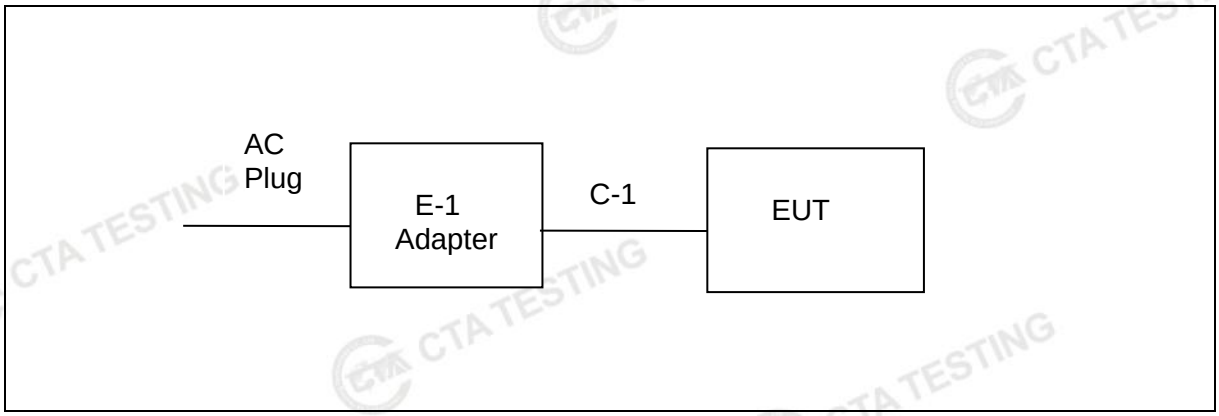

2.5 DESCRIPTION OF NECESSARY ACCESSORIES AND SUPPORT UNITS

The EUT has been tested as an independent unit together with other necessary accessories or support units. The following support units or accessories were used to form a representative test configuration during the tests.

Necessary accessories

Item	Equipment	Mfr/Brand	Model/Type No.	Length	Note
	Adapter	BANG	DSA-45PDH	N/A	N/A
	DC Cable	N/A	N/A	200cm	NO

Support units

Item	Equipment	Mfr/Brand	Model/Type No.	Length	Note

Note:

(1) For detachable type I/O cable should be specified the length in cm in『Length』column.

2.6 EQUIPMENTS LIST FOR ALL TEST ITEMS

Test Equipment	Manufacturer	Model No.	Equipment No.	Calibration Date	Calibration Due Date
LISN	R&S	ENV216	CTA-308	2023/08/02	2024/08/01
LISN	R&S	ENV216	CTA-314	2023/08/02	2024/08/01
EMI Test Receiver	R&S	ESPI	CTA-307	2023/08/02	2024/08/01
EMI Test Receiver	R&S	ESCI	CTA-306	2023/08/02	2024/08/01
Spectrum Analyzer	Agilent	N9020A	CTA-301	2023/08/02	2024/08/01
Spectrum Analyzer	R&S	FSP	CTA-337	2023/08/02	2024/08/01
Vector Signal generator	Agilent	N5182A	CTA-305	2023/08/02	2024/08/01
Analog Signal Generator	R&S	SML03	CTA-304	2023/08/02	2024/08/01
WIDEBAND RADIO COMMUNICATIO N TESTER	CMW500	R&S	CTA-302	2023/08/02	2024/08/01
Temperature and humidity meter	Chigo	ZG-7020	CTA-326	2023/08/02	2024/08/01
Ultra-Broadband Antenna	Schwarzbeck	VULB9163	CTA-310	2023/10/17	2024/10/16
Horn Antenna	Schwarzbeck	BBHA 9120D	CTA-309	2023/10/13	2024/10/12
Loop Antenna	Zhinan	ZN30900C	CTA-311	2023/10/17	2024/10/16
Horn Antenna	Beijing Hangwei Dayang	OBH100400	CTA-336	2021/08/07	2024/08/06
Amplifier	Schwarzbeck	BBV 9745	CTA-312	2023/08/02	2024/08/01
Amplifier	Taiwan chengyi	EMC051845B	CTA-313	2023/08/02	2024/08/01
Directional coupler	NARDA	4226-10	CTA-303	2023/08/02	2024/08/01
High-Pass Filter	XingBo	XBLBQ-GTA18	CTA-402	2023/08/02	2024/08/01
High-Pass Filter	XingBo	XBLBQ-GTA27	CTA-403	2023/08/02	2024/08/01
Automated filter bank	Tonscend	JS0806-F	CTA-404	2023/08/02	2024/08/01
Power Sensor	Agilent	U2021XA	CTA-405	2023/08/02	2024/08/01
Amplifier	Schwarzbeck	BBV9719	CTA-406	2023/08/02	2024/08/01
Test Equipment	Manufacturer	Model No.	Version number	Calibration	Calibration Due Date

				Date	
EMI Test Software	Tonscend	TS®JS32-RE	5.0.0.2	N/A	N/A
EMI Test Software	Tonscend	TS®JS32-CE	5.0.0.1	N/A	N/A
RF Test Software	Tonscend	TS®JS1120-3	3.1.65	N/A	N/A
RF Test Software	Tonscend	TS®JS1120	3.1.46	N/A	N/A

3. EMC EMISSION TEST

3.1 CONDUCTED EMISSION MEASUREMENT

3.1.1 POWER LINE CONDUCTED EMISSION Limits (Frequency Range 150KHz-30MHz)

FREQUENCY (MHz)	Class B (dBuV)		Standard
	Quasi-peak	Average	
0.15 -0.5	66 - 56 *	56 - 46 *	CISPR
0.50 -5.0	56.00	46.00	CISPR
5.0 -30.0	60.00	50.00	CISPR

0.15 -0.5	66 - 56 *	56 - 46 *	FCC
0.50 -5.0	56.00	46.00	FCC
5.0 -30.0	60.00	50.00	FCC

Note:

(1) The tighter limit applies at the band edges.

(2) The limit of " * " marked band means the limitation decreases linearly with the logarithm of the frequency in the range.

The following table is the setting of the receiver

Receiver Parameters	Setting
Attenuation	10 dB
Start Frequency	0.15 MHz
Stop Frequency	30 MHz
IF Bandwidth	9 kHz

3.1.2 TEST PROCEDURE

a. The EUT is 0.8 m from the horizontal ground plane and 0.4 m from the vertical ground plane with EUT being connected to the power mains through a line impedance stabilization network (LISN). All other support equipments are powered from additional LISN(s). The LISN provides 50 Ohm/ 50uH of coupling impedance for the measuring instrument.
b. Interconnecting cables that hang closer than 40 cm to the ground plane shall be folded back and forth in the center forming a bundle 30 to 40 cm long.
c. I/O cables that are not connected to a peripheral shall be bundled in the center. The end of the cable may be terminated, if required, using the correct terminating impedance. The overall length shall not exceed 1 m.
d. LISN is at least 80 cm from the nearest part of EUT chassis.
e. For the actual test configuration, please refer to the related Item –EUT Test Photos.

3.1.3 DEVIATION FROM TEST STANDARD

No deviation

3.1.4 TEST SETUP

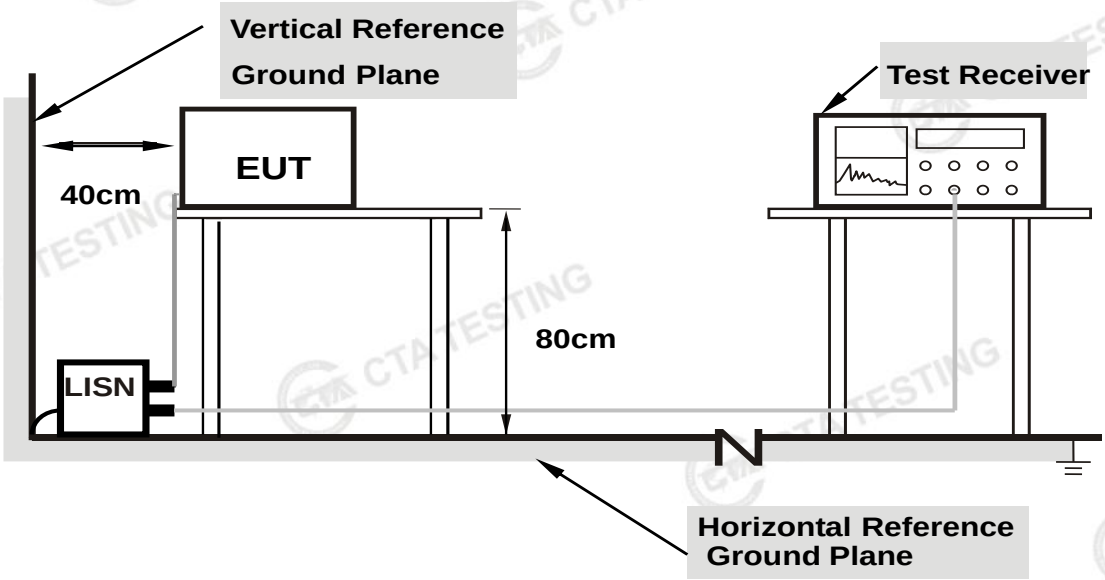

Note: 1. Support units were connected to second LISN.

2. Both of LISNs (AMN) are 80 cm from EUT and at least 80 cm from other units and other metal planes support units.

3.1.5 EUT OPERATING CONDITIONS

The EUT was configured for testing in a typical fashion (as a customer would normally use it). The EUT has been programmed to continuously transmit during test. This operating condition was tested and used to collect the included data.

3.1.6 TEST RESULTS

Temperature:	26.2(C)	Relative Humidity:	54%RH
Test Voltage:	AC 120V/60Hz	Phase:	L
Test Mode：	Mode 13		

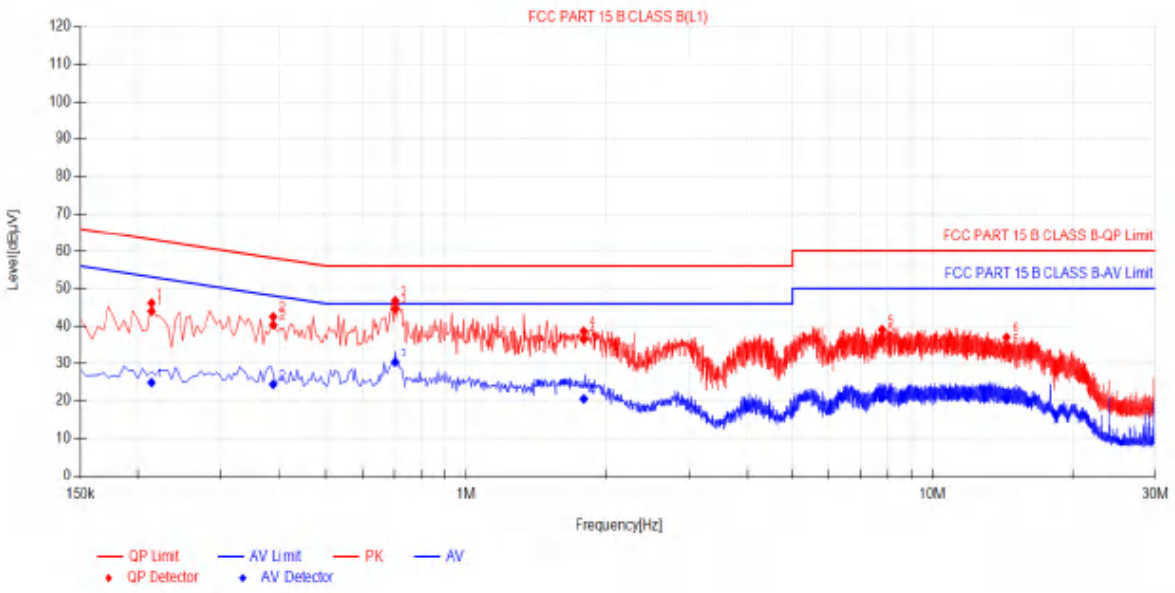

Final Data List											
NO.	Freq. [MHz]	Factor [dB]	QP Reading[dBµV]	QP Value [dBµV]	QP Limit [dBµV]	QP Margin [dB]	AV Reading [dBµV]	AV Value [dBµV]	AV Limit [dBµV]	AV Margin [dB]	Verdict
1	0.213	10.50	33.48	43.98	63.09	19.11	14.31	24.81	53.09	28.28	PASS
2	0.3885	10.50	29.85	40.35	58.10	17.75	13.83	24.33	48.10	23.77	PASS
3	0.7035	10.50	34.10	44.60	56.00	11.40	19.80	30.30	46.00	15.70	PASS
4	1.788	10.50	26.01	36.51	56.00	19.49	9.99	20.49	46.00	25.51	PASS
5	7.8	10.50	26.23	36.73	60.00	23.27	10.21	20.71	50.00	29.29	PASS
6	14.4105	10.50	23.66	34.16	60.00	25.84	9.76	20.26	50.00	29.74	PASS

Note:1).QP Value (dBµV)= QP Reading (dBµV)+ Factor (dB)

2). Factor (dB)=insertion loss of LISN (dB) + Cable loss (dB)

3). QPMargin(dB) = QP Limit (dBµV) - QP Value (dBµV)

4). AVMargin(dB) = AV Limit (dBµV) - AV Value (dBµV)

Temperature:	26.2(C)	Relative Humidity:	54%RH
Test Voltage:	AC 120V/60Hz	Phase:	N
Test Mode:	Mode 13		

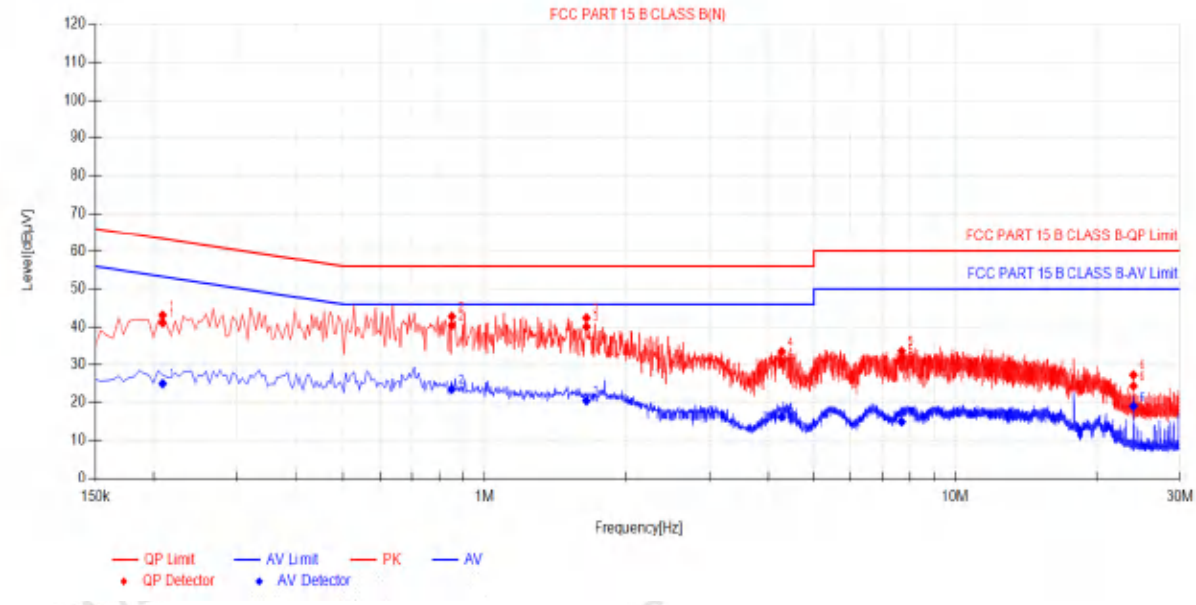

Final Data List											
NO.	Freq. [MHz]	Factor [dB]	QP Reading[dBµV]	QP Value [dBµV]	QP Limit [dBµV]	QP Margin [dB]	AV Reading [dBµV]	AV Value [dBµV]	AV Limit [dBµV]	AV Margin [dB]	Verdict
1	0.2085	10.50	30.61	41.11	63.26	22.15	14.42	24.92	53.26	28.34	PASS
2	0.852	10.50	29.95	40.45	56.00	15.55	12.92	23.42	46.00	22.58	PASS
3	1.644	10.50	29.58	40.08	56.00	15.92	9.90	20.40	46.00	25.60	PASS
4	4.2765	10.50	20.14	30.64	56.00	25.36	5.68	16.18	46.00	29.82	PASS
5	7.701	10.50	21.04	31.54	60.00	28.46	4.40	14.90	50.00	35.10	PASS
6	23.91	10.50	13.79	24.29	60.00	35.71	8.49	18.99	50.00	31.01	PASS

Note:1).QP Value (dBµV)= QP Reading (dBµV)+ Factor (dB)

2). Factor (dB)=insertion loss of LISN (dB) + Cable loss (dB)

3). QPMargin(dB) = QP Limit (dBµV) - QP Value (dBµV)

4). AVMargin(dB) = AV Limit (dBµV) - AV Value (dBµV)

3.2 RADIATED EMISSION AND (BANDEDGE) MEASUREMENT

3.2.1 RADIATED EMISSION LIMITS (Frequency Range 9kHz-1000MHz)

In case the emission fall within the restricted band specified on 15.407(b)7&15.205/209(a), then the limit in the table below has to be followed.

Frequencies (MHz)	Field Strength (micorvolts/meter)	Measurement Distance (meters)
0.009~0.490	2400/F(KHz)	300
0.490~1.705	24000/F(KHz)	30
1.705~30.0	30	30
30~88	100	3
88~216	150	3
216~960	200	3
Above 960	500	3

LIMITS OF RADIATED EMISSION MEASUREMENT (Above 1000MHz)

FREQUENCY (MHz)	Class B (dBuV/m) (at 3M)	
	PEAK	AVERAGE
Above 1000	68.2	54

Notes:

(1) The limit for radiated test was performed according to FCC PART 15E.

(2) The tighter limit applies at the band edges.

(3) Emission level (dBuV/m)=20log Emission level (uV/m).

LIMITS OF RESTRICTED FREQUENCY BANDS

FREQUENCY (MHz)	FREQUENCY (MHz)	FREQUENCY (MHz)	FREQUENCY (GHz)
0.090-0.110	16.42-16.423	399.9-410	4.5-5.15
0.495-0.505	16.69475-16.69525	608-614	5.35-5.46
2.1735-2.1905	16.80425-16.80475	960-1240	7.25-7.75
4.125-4.128	25.5-25.67	1300-1427	8.025-8.5
4.17725-4.17775	37.5-38.25	1435-1626.5	9.0-9.2
4.20725-4.20775	73-74.6	1645.5-1646.5	9.3-9.5
6.215-6.218	74.8-75.2	1660-1710	10.6-12.7
6.26775-6.26825	108-121.94	1718.8-1722.2	13.25-13.4
6.31175-6.31225	123-138	2200-2300	14.47-14.5
8.291-8.294	149.9-150.05	2310-2390	15.35-16.2
8.362-8.366	156.52475-156.52525	2483.5-2500	17.7-21.4
8.37625-8.38675	156.7-156.9	2690-2900	22.01-23.12
8.41425-8.41475	162.0125-167.17	3260-3267	23.6-24.0
12.29-12.293	167.72-173.2	3332-3339	31.2-31.8
12.51975-12.52025	240-285	3345.8-3358	36.43-36.5
12.57675-12.57725	322-335.4	3600-4400	Above 38.6
13.36-13.41			

Note: In case the emission radiated emission above 1000MHz fall within the restricted band the restricted frequency bands, the peak limit is 74 dBuV/m.

LIMITS OF EMISSIONS OUTSIDE OF THE FREQUENCY BANDS

Undesirable emission limits. Except as shown in paragraph (b)(7) of this section, the maximum emissions outside of the frequency bands of operation shall be attenuated in accordance with the following limits:

(1) For transmitters operating in the 5.15-5.25 GHz band: All emissions outside of the 5.15-5.35 GHz band shall not exceed an e.i.r.p. of −27 dBm/MHz.

(2) For transmitters operating in the 5.25-5.35 GHz band: All emissions outside of the 5.15-5.35 GHz band shall not exceed an e.i.r.p. of −27 dBm/MHz.

(3) For transmitters operating in the 5.47-5.725 GHz band: All emissions outside of the 5.47-5.725 GHz band shall not exceed an e.i.r.p. of −27 dBm/MHz.

(4) For transmitters operating in the 5.725-5.85 GHz band:

(i) All emissions shall be limited to a level of −27 dBm/MHz at 75 MHz or more above or below the band edge increasing linearly to 10 dBm/MHz at 25 MHz above or below the band edge, and from 25 MHz above or below the band edge increasing linearly to a level of 15.6 dBm/MHz at 5 MHz above or below the band edge, and from 5 MHz above or below the band edge increasing linearly to a level of 27 dBm/MHz at the band edge.

Note: dBuV/m(at 3M) = EIRP(dBm) + 95.2.

Peak Limit = -27dBm/MHz + 95.2 = 68.2 dBuV/m.

Spectrum Parameter	**Setting**
Attenuation	Auto
Detector	Peak
Start Frequency	1000 MHz(Peak/AV)
Stop Frequency	10th carrier harmonic (Peak/AV)
RB / VB (emission in restricted band)	1 MHz / 1 MHz, AV=1 MHz /3 MHz

For Band edge

Spectrum Parameter	Setting
Detector	Peak
RB / VB (emission in restricted band)	1 MHz / 1 MHz, AV=1 MHz /3 MHz

Receiver Parameter	**Setting**
Attenuation	Auto
Start ~ Stop Frequency	9kHz~90kHz / RB 200Hz for PK & AV
Start ~ Stop Frequency	90kHz~110kHz / RB 200Hz for QP
Start ~ Stop Frequency	110kHz~490kHz / RB 200Hz for PK & AV
Start ~ Stop Frequency	490kHz~30MHz / RB 9kHz for QP
Start ~ Stop Frequency	30MHz~1000MHz / RB 120kHz for QP

3.2.2 TEST PROCEDURE

a. The measuring distance at 3 m shall be used for measurements at frequency 0.009MHz up to 1GHz, and above 1GHz.
b. The EUT was placed on the top of a rotating table 0.8 m (above 1GHz is 1.5 m) above the ground at a 3 m anechoic chamber test site. The table was rotated 360 degree to determine the position of the highest radiation.
c. The height of the equipment shall be 0.8 m (above 1GHz is 1.5 m); the height of the test antenna shall vary between 1 m to 4 m. Horizontal and vertical polarization of the antenna are set to make the measurement.
d. The initial step in collecting conducted emission data is a spectrum analyzer peak detector mode pre-scanning the measurement frequency range. Significant peaks are then marked and QuasiPeak detector mode will be re-measured.
e. If the Peak Mode measured value is compliance with and lower than Quasi Peak Mode Limit, the EUT shall be deemed to meet QP Limits and no additional QP Mode measurement was performed.
f. For the actual test configuration, please refer to the related Item –EUT Test Photos.

Note:

Both horizontal and vertical antenna polarities were tested and performed pretest to three orthogonal axis. The worst case emissions were reported.

3.2.2 DEVIATION FROM TEST STANDARD

No deviation

3.2.3 TEST SETUP

(A) Radiated Emission Test-Up Frequency Below 30MHz

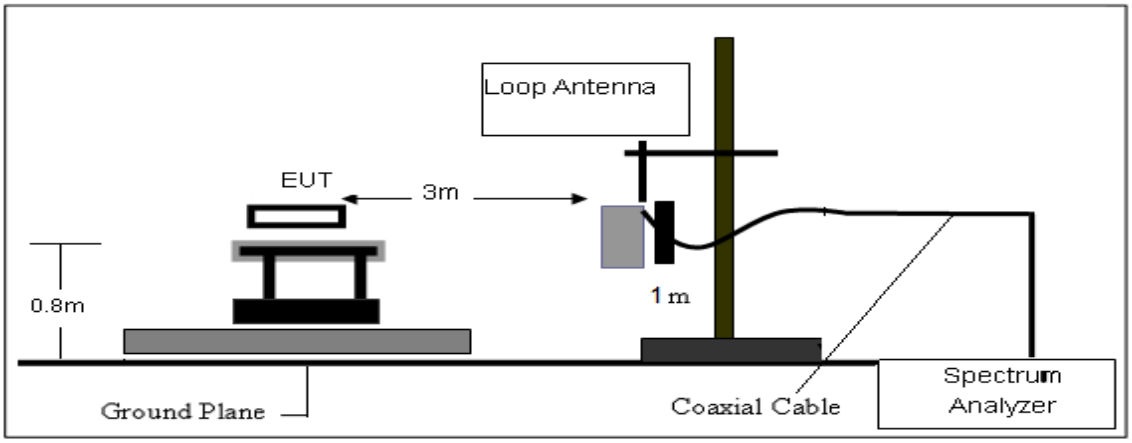

(B) Radiated Emission Test-Up Frequency 30MHz~1GHz

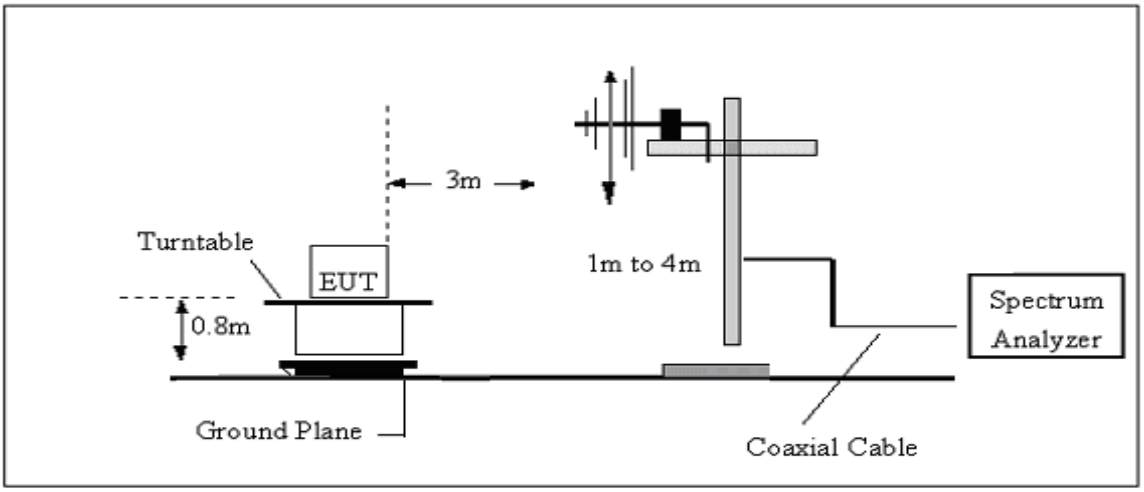

(C) Radiated Emission Test-Up Frequency Above 1GHz

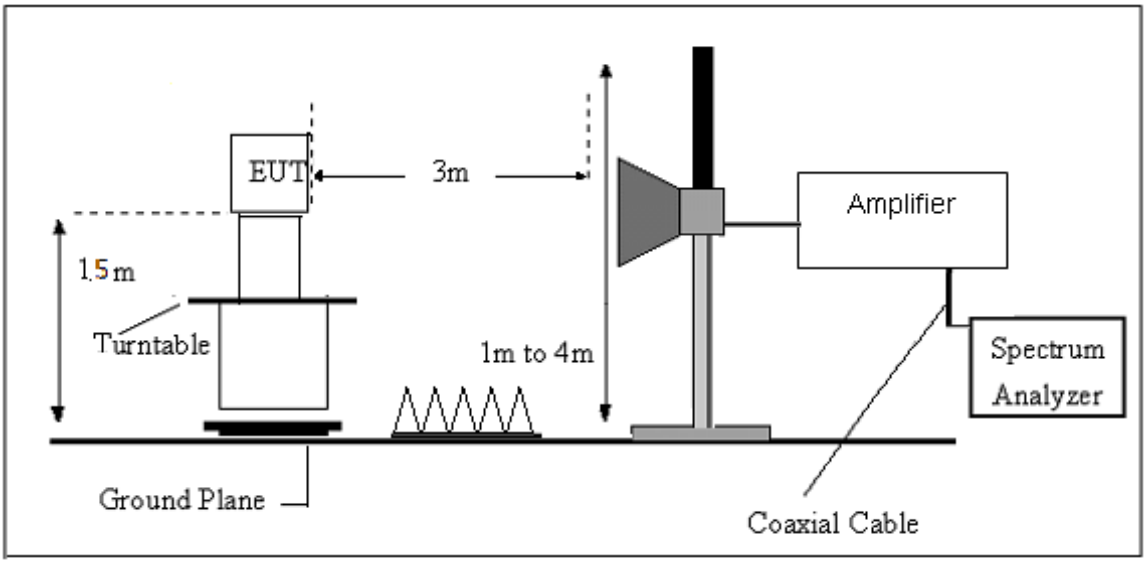

3.2.4 EUT OPERATING CONDITIONS

The EUT tested system was configured as the statements of 2.4 Unless otherwise a special operating condition is specified in the follows during the testing.

3.2.5 FIELD STRENGTH CALCULATION

The field strength is calculated by adding the Antenna Factor and Cable Factor and subtracting the Amplifier Gain and Duty Cycle Correction Factor (if any) from the measured reading. The basic equation with a sample calculation is as follows:
FS = RA + AF + CL - AG
Where
FS = Field Strength
CL = Cable Attenuation Factor (Cable Loss)
RA = Reading Amplitude
AG = Amplifier Gain
AF = Antenna Factor
For example

Frequency	FS	RA	AF	CL	AG	Factor
(MHz)	(dBμV/m)	(dBμV/m)	(dB)	(dB)	(dB)	(dB)
300	40	58.1	12.2	1.6	31.9	-18.1

Factor=AF+CL-AG

3.2.6 TEST RESULTS (Between 9KHz – 30 MHz)

Temperature:	23.1(C)	Relative Humidtity:	60%RH
Test Voltage:	DC 7.6V	Polarization :	--
Test Mode:	TX Mode		

Freq.	Reading	Limit	Margin	State
(MHz)	(dBuV/m)	(dBuV/m)	(dB)	P/F
--	--	--	--	PASS
--	--	--	--	PASS

Note:

The amplitude of spurious emissions which are attenuated by more than 20dB below the permissible value has no need to be reported.
Distance extrapolation factor =40 log (specific distance/test distance)(dB);
Limit line = specific limits(dBuv) + distance extrapolation factor.

3.2.7 TEST RESULTS (Between 30MHz – 1GHz)

Temperature	23.1(C)	Relative Humidtity:	60%RH
Test Voltage	DC 7.6V	Polarization:	Horizontal
Test Mode	Mode 1~12(Mode 4 worst mode)		

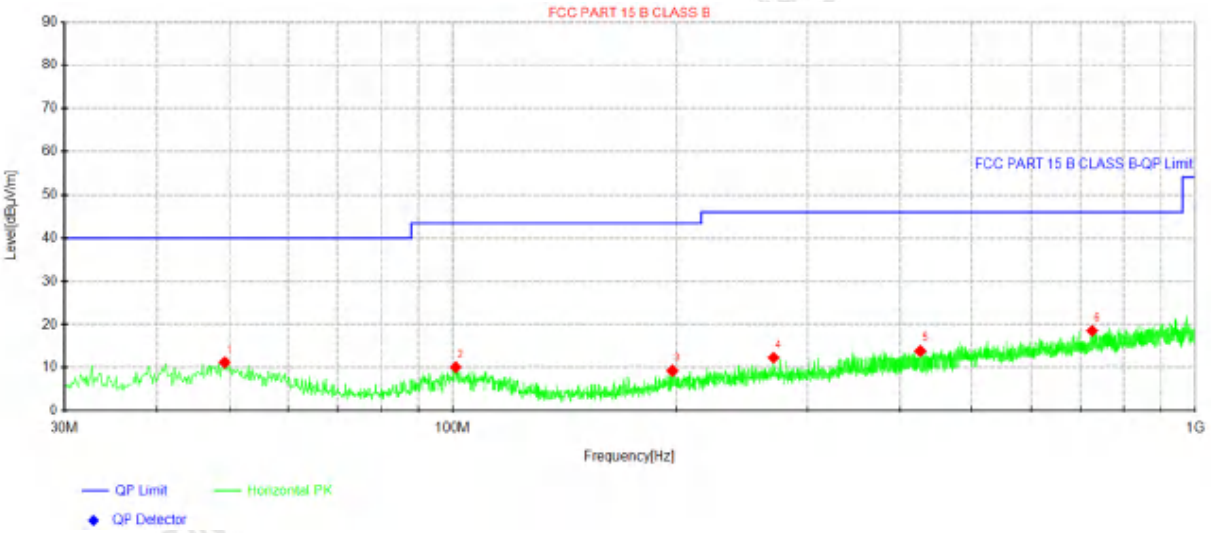

Suspected Data List									
NO.	Freq. [MHz]	Reading [dBμV]	Level [dBμV/m]	Factor [dB/m]	Limit [dBμV/m]	Margin [dB]	Height [cm]	Angle [°]	Polarity
1	49.2788	27.30	11.18	-16.12	40.00	28.82	100	34	Horizontal
2	100.931	28.49	10.08	-18.41	43.50	33.42	100	357	Horizontal
3	197.567	28.75	9.31	-19.44	43.50	34.19	100	326	Horizontal
4	270.317	30.00	12.31	-17.69	46.00	33.69	100	3	Horizontal
5	426.245	29.16	13.90	-15.26	46.00	32.10	100	68	Horizontal
6	726.581	29.75	18.55	-11.20	46.00	27.45	100	148	Horizontal

Note:1).Level (dBμV/m)= Reading (dBμV)+ Factor (dB/m)

2). Factor(dB/m)=Antenna Factor (dB/m) + Cable loss (dB) - Pre Amplifier gain (dB)

3). Margin(dB) = Limit (dBμV/m) - Level (dBμV/m)

4). All modes have been tested,only show the worst case.

Temperature:	23.1(C)	Relative Humidity:	60%RH
Test Voltage:	DC 7.6V	Phase:	Vertical
Test Mode:	Mode 1~12(Mode 4 worst mode)		

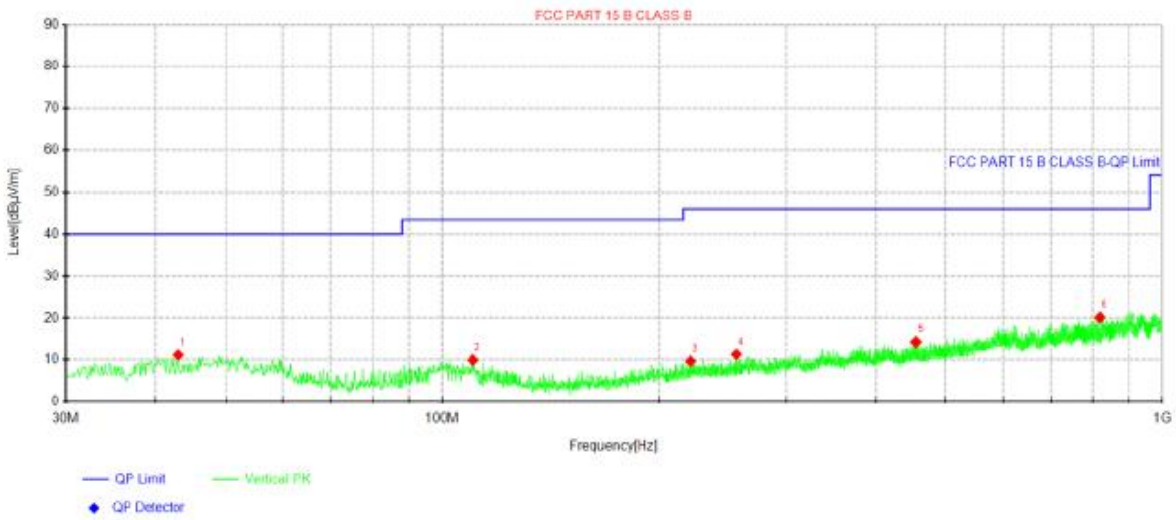

Suspected Data List									
NO.	Freq. [MHz]	Reading [dBμV]	Level [dBμV/m]	Factor [dB/m]	Limit [dBμV/m]	Margin [dB]	Height [cm]	Angle [°]	Polarity
1	42.9738	27.88	11.15	-16.73	40.00	28.85	100	319	Vertical
2	110.267	28.83	9.94	-18.89	43.50	33.56	100	359	Vertical
3	221.211	28.45	9.68	-18.77	46.00	36.32	100	359	Vertical
4	256.131	29.15	11.31	-17.84	46.00	34.69	100	302	Vertical
5	454.981	29.31	14.27	-15.04	46.00	31.73	100	51	Vertical
6	818.731	30.43	20.14	-10.29	46.00	25.86	100	360	Vertical

Note:1).Level (dBμV/m)= Reading (dBμV)+ Factor (dB/m)

2). Factor(dB/m)=Antenna Factor (dB/m) + Cable loss (dB) - Pre Amplifier gain (dB)

3). Margin(dB) = Limit (dBμV/m) - Level (dBμV/m)

4). All modes have been tested,only show the worst case.

3.2.8 TEST RESULTS (Above 1000 MHz)

U-NII-1 5150-5250MHz

U-NII 1										
Frequency (MHz)	Reading (dBuV)	Amplifier (dB)	Loss (dB)	Antenna Factor (dB/m)	Orrected Factor (dB)	Emission Level (dBμV/m)	Limit (dBuV/m)	Margin (dB)	Detector	Comment
Low Channel (802.11ac20/ 5180 MHz)										
3250.37	45.16	44.70	6.70	28.20	-9.80	35.36	68.20	-32.84	Pk	Vertical
3250.37	42.03	44.70	6.70	28.20	-9.80	32.23	54.00	-21.77	AV	Vertical
3247.09	43.95	44.70	6.70	28.20	-9.80	34.15	68.20	-34.05	Pk	Horizontal
3247.09	41.73	44.70	6.70	28.20	-9.80	31.93	54.00	-22.07	AV	Horizontal
3984.30	39.53	44.20	7.90	29.70	-6.60	32.93	74.00	-41.07	Pk	Vertical
3984.30	36.69	44.20	7.90	29.70	-6.60	30.09	54.00	-23.91	AV	Vertical
3993.18	39.19	44.20	7.90	29.70	-6.60	32.59	74.00	-41.41	Pk	Horizontal
3993.18	35.74	44.20	7.90	29.70	-6.60	29.14	54.00	-24.86	AV	Horizontal
7222.12	37.29	43.50	11.40	35.50	3.40	40.69	68.20	-27.51	Pk	Vertical
7222.12	33.84	43.50	11.40	35.50	3.40	37.24	54.00	-16.76	AV	Vertical
7223.05	36.46	43.50	11.40	35.50	3.40	39.86	68.20	-28.34	Pk	Horizontal
7223.05	33.96	43.50	11.40	35.50	3.40	37.36	54.00	-16.64	AV	Horizontal
10360.40	40.08	44.50	13.80	38.80	8.10	48.18	68.20	-20.02	Pk	Vertical
10360.40	36.58	44.50	13.80	38.80	8.10	44.68	54.00	-9.32	AV	Vertical
10360.09	39.21	44.50	13.80	38.80	8.10	47.31	68.20	-20.89	Pk	Horizontal
10360.09	36.74	44.50	13.80	38.80	8.10	44.84	54.00	-9.16	AV	Horizontal
11026.41	34.04	43.60	14.30	39.50	10.20	44.24	74.00	-29.76	Pk	Vertical
11026.41	31.06	43.60	14.30	39.50	10.20	41.26	54.00	-12.74	AV	Vertical
11022.14	32.82	43.60	14.30	39.50	10.20	43.02	74.00	-30.98	Pk	Horizontal
11022.14	30.39	43.60	14.30	39.50	10.20	40.59	54.00	-13.41	AV	Horizontal
13295.36	32.22	42.60	15.90	38.90	12.20	44.42	74.00	-29.58	Pk	Vertical
13295.36	28.77	42.60	15.90	38.90	12.20	40.97	54.00	-13.03	AV	Vertical
13297.75	32.58	42.60	15.90	38.90	12.20	44.78	74.00	-29.22	Pk	Horizontal
13297.75	29.53	42.60	15.90	38.90	12.20	41.73	54.00	-12.27	AV	Horizontal
Mid Channel (802.11ac20/ 5200 MHz)										
3249.22	44.23	44.70	6.70	28.20	-9.80	34.43	68.20	-33.77	Pk	Vertical
3249.22	41.77	44.70	6.70	28.20	-9.80	31.97	54.00	-22.03	AV	Vertical
3259.64	44.52	44.70	6.70	28.20	-9.80	34.72	68.20	-33.48	Pk	Horizontal
3259.64	41.22	44.70	6.70	28.20	-9.80	31.42	54.00	-22.58	AV	Horizontal
3984.09	39.38	44.20	7.90	29.70	-6.60	32.78	74.00	-41.22	Pk	Vertical
3984.09	36.81	44.20	7.90	29.70	-6.60	30.21	54.00	-23.79	AV	Vertical
3991.89	40.07	44.20	7.90	29.70	-6.60	33.47	74.00	-40.53	Pk	Horizontal
3991.89	36.36	44.20	7.90	29.70	-6.60	29.76	54.00	-24.24	AV	Horizontal
7235.98	36.62	43.50	11.40	35.50	3.40	40.02	68.20	-28.18	Pk	Vertical
7235.98	33.92	43.50	11.40	35.50	3.40	37.32	54.00	-16.68	AV	Vertical
7220.89	36.97	43.50	11.40	35.50	3.40	40.37	68.20	-27.83	Pk	Horizontal
7220.89	34.52	43.50	11.40	35.50	3.40	37.92	54.00	-16.08	AV	Horizontal
10400.40	39.27	44.50	13.80	38.80	8.10	47.37	68.20	-20.83	Pk	Vertical
10400.40	36.91	44.50	13.80	38.80	8.10	45.01	54.00	-8.99	AV	Vertical
10399.94	39.56	44.50	13.80	38.80	8.10	47.66	68.20	-20.54	Pk	Horizontal
10399.94	37.09	44.50	13.80	38.80	8.10	45.19	54.00	-8.81	AV	Horizontal
11024.57	33.80	43.60	14.30	39.50	10.20	44.00	74.00	-30.00	Pk	Vertical
11024.57	29.90	43.60	14.30	39.50	10.20	40.10	54.00	-13.90	AV	Vertical
11020.63	33.30	43.60	14.30	39.50	10.20	43.50	74.00	-30.50	Pk	Horizontal
11020.63	30.11	43.60	14.30	39.50	10.20	40.31	54.00	-13.69	AV	Horizontal
13288.07	31.70	42.60	15.90	38.90	12.20	43.90	74.00	-30.10	Pk	Vertical
13288.07	29.32	42.60	15.90	38.90	12.20	41.52	54.00	-12.48	AV	Vertical
13282.00	31.70	42.60	15.90	38.90	12.20	43.90	74.00	-30.10	Pk	Horizontal
13282.00	29.43	42.60	15.90	38.90	12.20	41.63	54.00	-12.37	AV	Horizontal

High Channel (802.11ac20/ 5240 MHz)										
3250.56	45.19	44.70	6.70	28.20	-9.80	35.39	68.20	-32.81	Pk	Vertical
3250.56	42.22	44.70	6.70	28.20	-9.80	32.42	54.00	-21.58	AV	Vertical
3261.32	43.84	44.70	6.70	28.20	-9.80	34.04	74.00	-39.96	Pk	Horizontal
3261.32	41.71	44.70	6.70	28.20	-9.80	31.91	54.00	-22.09	AV	Horizontal
3990.41	38.87	44.20	7.90	29.70	-6.60	32.27	74.00	-41.73	Pk	Vertical
3990.41	36.05	44.20	7.90	29.70	-6.60	29.45	54.00	-24.55	AV	Vertical
3998.13	39.19	44.20	7.90	29.70	-6.60	32.59	74.00	-41.41	Pk	Horizontal
3998.13	35.78	44.20	7.90	29.70	-6.60	29.18	54.00	-24.82	AV	Horizontal
7220.49	37.91	43.50	11.40	35.50	3.40	41.31	68.20	-26.89	Pk	Vertical
7220.49	34.11	43.50	11.40	35.50	3.40	37.51	54.00	-16.49	AV	Vertical
7218.56	37.82	43.50	11.40	35.50	3.40	41.22	68.20	-26.98	Pk	Horizontal
7218.56	33.96	43.50	11.40	35.50	3.40	37.36	54.00	-16.64	AV	Horizontal
10480.25	39.00	44.50	13.80	38.80	8.10	47.10	68.20	-21.10	Pk	Vertical
10480.25	36.50	44.50	13.80	38.80	8.10	44.60	54.00	-9.40	AV	Vertical
10480.38	39.89	44.50	13.80	38.80	8.10	47.99	68.20	-20.21	Pk	Horizontal
10480.38	35.88	44.50	13.80	38.80	8.10	43.98	54.00	-10.02	AV	Horizontal
11030.95	33.28	43.60	14.30	39.50	10.20	43.48	74.00	-30.52	Pk	Vertical
11030.95	30.64	43.60	14.30	39.50	10.20	40.84	54.00	-13.16	AV	Vertical
11033.37	33.64	43.60	14.30	39.50	10.20	43.84	74.00	-30.16	Pk	Horizontal
11033.37	29.81	43.60	14.30	39.50	10.20	40.01	54.00	-13.99	AV	Horizontal
13283.03	32.84	42.60	15.90	38.90	12.20	45.04	74.00	-28.96	Pk	Vertical
13283.03	29.02	42.60	15.90	38.90	12.20	41.22	54.00	-12.78	AV	Vertical
13296.72	31.65	42.60	15.90	38.90	12.20	43.85	74.00	-30.15	Pk	Horizontal
13296.72	29.21	42.60	15.90	38.90	12.20	41.41	54.00	-12.59	AV	Horizontal

Remark:
1.Factor = Antenna Factor + Cable Loss – Pre-amplifier.
2. Scan with 802.11a,802.11n (HT-20),802.11n (HT-40), 802.11ac (VHT-20),802.11ac (VHT-40), 802.11ac (VHT-80) the worst case is 802.11ac (VHT-20).
3. The frequency emission of peak points that did not show above the forms are at least 20dB below the limit, the frequency emission is mainly from the environment noise.

U-NII-3 (5.725-5.850) GHz

U-NII 3										
Frequency (MHz)	Reading (dBuV)	Amplifier (dB)	Loss (dB)	Antenna Factor (dB/m)	Orrected Factor (dB)	Emission Level (dBµV/m)	Limit (dBuV/m)	Margin (dB)	Detector	Comment
Mid Channel (802.11ac80/ 5775MHz)										
3253.05	44.51	44.70	6.70	28.20	-9.80	34.71	68.20	-33.49	Pk	Vertical
3253.05	41.26	44.70	6.70	28.20	-9.80	31.46	54.00	-22.54	AV	Vertical
3256.97	44.28	44.70	6.70	28.20	-9.80	34.48	68.20	-33.72	Pk	Horizontal
3256.97	41.92	44.70	6.70	28.20	-9.80	32.12	54.00	-21.88	AV	Horizontal
3989.79	38.80	44.20	7.90	29.70	-6.60	32.20	74.00	-41.80	Pk	Vertical
3989.79	36.01	44.20	7.90	29.70	-6.60	29.41	54.00	-24.59	AV	Vertical
3989.59	39.10	44.20	7.90	29.70	-6.60	32.50	74.00	-41.50	Pk	Horizontal
3989.59	36.67	44.20	7.90	29.70	-6.60	30.07	54.00	-23.93	AV	Horizontal
7234.24	37.46	43.50	11.40	35.50	3.40	40.86	68.20	-27.34	Pk	Vertical
7234.24	34.12	43.50	11.40	35.50	3.40	37.52	54.00	-16.48	AV	Vertical
7226.87	37.11	43.50	11.40	35.50	3.40	40.51	68.20	-27.69	Pk	Horizontal
7226.87	33.86	43.50	11.40	35.50	3.40	37.26	54.00	-16.74	AV	Horizontal
10400.23	39.03	44.50	13.80	38.80	8.10	47.13	68.20	-21.07	Pk	Vertical
10400.23	37.05	44.50	13.80	38.80	8.10	45.15	54.00	-8.85	AV	Vertical
10400.37	38.91	44.50	13.80	38.80	8.10	47.01	68.20	-21.19	Pk	Horizontal
10400.37	36.86	44.50	13.80	38.80	8.10	44.96	54.00	-9.04	AV	Horizontal
11029.55	32.82	43.60	14.30	39.50	10.20	43.02	74.00	-30.98	Pk	Vertical
11029.55	30.10	43.60	14.30	39.50	10.20	40.30	54.00	-13.70	AV	Vertical
11030.99	34.16	43.60	14.30	39.50	10.20	44.36	74.00	-29.64	Pk	Horizontal
11030.99	30.49	43.60	14.30	39.50	10.20	40.69	54.00	-13.31	AV	Horizontal
13284.53	31.70	42.60	15.90	38.90	12.20	43.90	74.00	-30.10	Pk	Vertical
13284.53	29.95	42.60	15.90	38.90	12.20	42.15	54.00	-11.85	AV	Vertical
13293.94	32.55	42.60	15.90	38.90	12.20	44.75	74.00	-29.25	Pk	Horizontal
13293.94	29.46	42.60	15.90	38.90	12.20	41.66	54.00	-12.34	AV	Horizontal

Remark:
1.Factor = Antenna Factor + Cable Loss – Pre-amplifier.
2. Scan with 802.11a,802.11n (HT-20),802.11n (HT-40), 802.11ac (VHT-20),802.11ac (VHT-40), 802.11ac (VHT-80) the worst case is 802.11ac (VHT-80).
3. The frequency emission of peak points that did not show above the forms are at least 20dB below the limit, the frequency emission is mainly from the environment noise.

3.2.9 RESTRICTED FREQUENCY BANDS AND BAND EDGE

U-NII-1 5150-5250MHz

802.11ac20

Frequency (MHz)	Meter Reading (dBμV)	Amplifier (dB)	Loss (dB)	Antenna Factor (dB/m)	Orrected Factor (dB)	Emission Level (dBμV/m)	Limits (dBμV/m)	Margin (dB)	Detector Type	Comment
5150	40.03	44.20	8.98	31.60	-3.62	36.41	74	-37.59	Peak	Vertical
5150	29.92	44.20	8.98	31.60	-3.62	26.30	54	-27.70	AVG	Vertical
5150	40.10	44.20	8.98	31.60	-3.62	36.48	74	-37.52	Peak	Horizontal
5150	31.64	44.20	8.98	31.60	-3.62	28.02	54	-25.98	AVG	Horizontal
5350	43.89	44.20	9.35	31.60	-3.25	40.64	74	-33.36	Peak	Vertical
5350	29.72	44.20	9.35	31.60	-3.25	26.47	54	-27.53	AVG	Vertical
5350	38.37	44.20	9.35	31.60	-3.25	35.12	74	-38.88	Peak	Horizontal
5350	28.27	44.20	9.35	31.60	-3.25	25.02	54	-28.98	AVG	Horizontal

802.11n40

Frequency (MHz)	Meter Reading (dBμV)	Amplifier (dB)	Loss (dB)	Antenna Factor (dB/m)	Orrected Factor (dB)	Emission Level (dBμV/m)	Limits (dBμV/m)	Margin (dB)	Detector Type	Comment
5150	40.47	44.20	8.98	31.60	-3.62	36.85	74	-37.15	Peak	Vertical
5150	31.30	44.20	8.98	31.60	-3.62	27.68	54	-26.32	AVG	Vertical
5150	38.49	44.20	8.98	31.60	-3.62	34.87	74	-39.13	Peak	Horizontal
5150	31.18	44.20	8.98	31.60	-3.62	27.56	54	-26.44	AVG	Horizontal
5350	44.01	44.20	9.35	31.60	-3.25	40.76	74	-33.24	Peak	Vertical
5350	31.06	44.20	9.35	31.60	-3.25	27.81	54	-26.19	AVG	Vertical
5350	39.94	44.20	9.35	31.60	-3.25	36.69	74	-37.31	Peak	Horizontal
5350	31.65	44.20	9.35	31.60	-3.25	28.40	54	-25.60	AVG	Horizontal

802.11ac80

Frequency (MHz)	Meter Reading (dBμV)	Amplifier (dB)	Loss (dB)	Antenna Factor (dB/m)	Orrected Factor (dB)	Emission Level (dBμV/m)	Limits (dBμV/m)	Margin (dB)	Detector Type	Comment
5150	41.14	44.20	8.98	31.60	-3.62	37.52	74	-36.48	Peak	Vertical
5150	29.00	44.20	8.98	31.60	-3.62	25.38	54	-28.62	AVG	Vertical
5150	38.67	44.20	8.98	31.60	-3.62	35.05	74	-38.95	Peak	Horizontal
5150	30.91	44.20	8.98	31.60	-3.62	27.29	54	-26.71	AVG	Horizontal
5350	46.63	44.20	9.35	31.60	-3.25	43.38	74	-30.62	Peak	Vertical
5350	27.94	44.20	9.35	31.60	-3.25	24.69	54	-29.31	AVG	Vertical
5350	37.63	44.20	9.35	31.60	-3.25	34.38	74	-39.62	Peak	Horizontal
5350	29.56	44.20	9.35	31.60	-3.25	26.31	54	-27.69	AVG	Horizontal

Note: All modes have been tested. Only the worst mode shown in the report.

U-NII-3 (5.725-5.85 GHz)

802.11n20

Frequency (MHz)	Meter Reading (dBμV)	Amplifier (dB)	Loss (dB)	Antenna Factor (dB/m)	Orrected Factor (dB)	Emission Level (dBμV/m)	Limits (dBμV/m)	Margin (dB)	Detector Type	Comment
5725	39.45	44.20	10.00	32.00	-2.20	37.25	74	-36.75	Peak	Vertical
5725	27.98	44.20	10.00	32.00	-2.20	25.78	54	-28.22	AVG	Vertical
5725	39.54	44.20	10.00	32.00	-2.20	37.34	74	-36.66	Peak	Horizontal
5725	27.90	44.20	10.00	32.00	-2.20	25.70	54	-28.30	AVG	Horizontal
5850	45.87	44.20	10.20	32.00	-2.00	43.87	74	-30.13	Peak	Vertical
5850	28.86	44.20	10.20	32.00	-2.00	26.86	54	-27.14	AVG	Vertical
5850	41.95	44.20	10.20	32.00	-2.00	39.95	74	-34.05	Peak	Horizontal
5850	31.42	44.20	10.20	32.00	-2.00	29.42	54	-24.58	AVG	Horizontal

802.11ac40

Frequency (MHz)	Meter Reading (dBμV)	Amplifier (dB)	Loss (dB)	Antenna Factor (dB/m)	Orrected Factor (dB)	Emission Level (dBμV/m)	Limits (dBμV/m)	Margin (dB)	Detector Type	Comment
5725	41.00	44.20	10.00	32.00	-2.20	38.80	74	-35.20	Peak	Vertical
5725	31.53	44.20	10.00	32.00	-2.20	29.33	54	-24.67	AVG	Vertical
5725	42.33	44.20	10.00	32.00	-2.20	40.13	74	-33.87	Peak	Horizontal
5725	30.07	44.20	10.00	32.00	-2.20	27.87	54	-26.13	AVG	Horizontal
5850	42.96	44.20	10.20	32.00	-2.00	40.96	74	-33.04	Peak	Vertical
5850	28.14	44.20	10.20	32.00	-2.00	26.14	54	-27.86	AVG	Vertical
5850	37.88	44.20	10.20	32.00	-2.00	35.88	74	-38.12	Peak	Horizontal
5850	28.15	44.20	10.20	32.00	-2.00	26.15	54	-27.85	AVG	Horizontal

802.11ac80

Frequency (MHz)	Meter Reading (dBμV)	Amplifier (dB)	Loss (dB)	Antenna Factor (dB/m)	Orrected Factor (dB)	Emission Level (dBμV/m)	Limits (dBμV/m)	Margin (dB)	Detector Type	Comment
5725	40.45	44.20	10.00	32.00	-2.20	38.25	74	-35.75	Peak	Vertical
5725	30.66	44.20	10.00	32.00	-2.20	28.46	54	-25.54	AVG	Vertical
5725	41.20	44.20	10.00	32.00	-2.20	39.00	74	-35.00	Peak	Horizontal
5725	31.65	44.20	10.00	32.00	-2.20	29.45	54	-24.55	AVG	Horizontal
5850	44.74	44.20	10.20	32.00	-2.00	42.74	74	-31.26	Peak	Vertical
5850	30.29	44.20	10.20	32.00	-2.00	28.29	54	-25.71	AVG	Vertical
5850	37.85	44.20	10.20	32.00	-2.00	35.85	74	-38.15	Peak	Horizontal
5850	29.99	44.20	10.20	32.00	-2.00	27.99	54	-26.01	AVG	Horizontal

Note: All modes have been tested. Only the worst mode shown in the report.4. POWER SPECTRAL DENSITY TEST

4.1 LIMIT

1. For mobile and portable client devices in the 5.15-5.25 GHz band, , the maximum power spectral density shall not exceed 11 dBm in any 1 megahertz band. If transmitting antennas of directional gain greater than 6 dBi are used, both the maximum conducted output power and the maximum power spectral density shall be reduced by the amount in dB that the directional gain of the antenna exceeds 6 dBi.
2. For the 5.25-5.35 GHz and 5.47-5.725 GHz bands, the maximum power spectral density shall not exceed 11 dBm in any 1 megahertz band. If transmitting antennas of directional gain greater than 6 dBi are used, both the maximum conducted output power and the maximum power spectral density shall be reduced by the amount in dB that the directional gain of the antenna exceeds 6 dBi.
3. For the band 5.725-5.850 GHz, the peak power spectral density shall not exceed 30 dBm in any 500KHz band. If transmitting antenna directional gain is greater than 6 dBi, both the maximum conducted output power and the peak power spectral density shall be reduced by the amount in dB that the directional gain of the antenna exceeds 6 dBi.

4.2 TEST PROCEDURE

1. The setting follows Method SA-1 of FCC KDB 789033 D02 General U-NII Test Procedures New Rules v02r01.

For devices operating in the band, the rules specify a measurement bandwidth of 500 kHz. Many spectrum analyzers do not have 500 kHz RBW, thus a narrower RBW may need to be used. The rules permit the use of a RBWs less than 1 MHz, or 500 kHz, “provided that the measured power is integrated over the full reference bandwidth” to show the total power over the specified measurement bandwidth (*i.e.,* 1 MHz, or 500 kHz). If measurements are performed using a reduced resolution bandwidth (< 1 MHz, or < 500 kHz) and integrated over 1 MHz, or 500 KHz bandwidth, the following adjustments to the procedures apply:

a) Set RBW ≥ 1/*T*, where *T* is defined in section II.B.I.a).

b) Set VBW ≥ 3 RBW.

c) If measurement bandwidth of Maximum PSD is specified in 500 kHz, add 10 log (500kHz/RBW) to the measured result, whereas RBW (< 500 kHz) is the reduced resolution bandwidth of the spectrum analyzer set during measurement.

d) If measurement bandwidth of Maximum PSD is specified in 1 MHz, add 10 log (1MHz/RBW) to the measured result, whereas RBW (< 1 MHz) is the reduced resolution bandwidth of spectrum analyzer set during measurement.

e) Care must be taken to ensure that the measurements are performed during a period of continuous transmission or are corrected upward for duty cycle.

Note: As a practical matter, it is recommended to use reduced RBW of 100 kHz for the sections5.c) and 5.d) above, since RBW=100 KHZ is available on nearly all spectrum analyzers.

4.3 DEVIATION FROM STANDARD

No deviation.

4.4 TEST SETUP

4.5 EUT OPERATION CONDITIONS

The EUT tested system was configured as the statements of 2.1 Unless otherwise a special operating condition is specified in the follows during the testing.

4.6 TEST RESULTS

Note: The test data please reference to attachment “STS2309028W10_Appendix 5G WIFI”.

5. BANDWIDTH MEASUREMENT

5.1 EMISSION BANDWIDTH (EBW) 26 BANDWID PROCEDURES / LIMIT

The following procedure shall be used for measuring 26 bandwidth.

5.1.1 TEST PROCEDURE

1. The testing follows FCC KDB 789033 D02 General UNII Test Procedures New Rules v02r01.
2. Set RBW = approximately 1% of the emission bandwidth.
3. Set the VBW > =RBW.
4. Detector = Peak.
5. Trace mode = max hold.
6. Measure the maximum width of the emission that is 26 dB down from the peak of the emission. Compare this with the RBW setting of the analyzer. Readjust RBW and repeat measurement as needed until the RBW/EBW ratio is approximately 1%.

5.1.2 DEVIATION FROM STANDARD

No deviation.

5.1.3 TEST SETUP

5.1.4 EUT OPERATION CONDITIONS

The EUT tested system was configured as the statements of 2.4 Unless otherwise a special operating condition is specified in the follows during the testing.

5.1.5 TEST RESULTS

Note: 1. ANT 1 Power> ANT 2 Power, Both ANT 1 and 2 have been test, Only show the worst data of ANT 1.

2. The test data please reference to attachment “STS2309028W10_Appendix 5G WIFI”.

5.2 OCCUPIED BANDWIDTH (99%) TEST APPLIED PROCEDURES / LIMIT

The following procedure shall be used for measuring (99 %) power bandwidth.

5.2.1 TEST PROCEDURE

1. The testing follows FCC KDB 789033 D02 General UNII Test Procedures v02r01.
The following procedure shall be used for measuring (99 %) power bandwidth:

1. Set center frequency to the nominal EUT channel center frequency.
2. Set span = 1.5 times to 5.0 times the OBW.
3. Set RBW = 1 % to 5 % of the OBW
4. Set VBW ≥ 3 · RBW
5. Video averaging is not permitted. Where practical, a sample detection and single sweep mode shall be used. Otherwise, peak detection and max hold mode (until the trace stabilizes) shall be used.
6. Use the 99 % power bandwidth function of the instrument (if available).
7. If the instrument does not have a 99 % power bandwidth function, the trace data points are recovered and directly summed in power units. The recovered amplitude data points, beginning at the lowest frequency, are placed in a running sum until 0.5 % of the total is reached; that frequency is recorded as the lower frequency. The process is repeated until 99.5 % of the total is reached; that frequency is recorded as the upper frequency. The 99% occupied bandwidth is the difference between these two frequencies.

5.2.2 DEVIATION FROM STANDARD

No deviation.

5.2.3 TEST SETUP

5.2.4 EUT OPERATION CONDITIONS

The EUT tested system was configured as the statements of 2.4 Unless otherwise a special operating condition is specified in the follows during the testing.

5.2.5 TEST RESULTS

Note: 1. ANT 1 Power> ANT 2 Power, Both ANT 1 and 2 have been test, Only show the worst data of ANT 1.

2. The test data please reference to attachment “STS2309028W10_Appendix 5G WIFI”.

5.3 MINIMUM EMISSION BANDWIDTH(6 DB) PROCEDURES / LIMIT

Section 15.407(e) specifies the minimum 6 dB emission bandwidth of at least 500 KHz for the band 5.725-5.85 GHz. The following procedure shall be used for measuring this bandwidth.

5.3.1 TEST PROCEDURE

1. The testing follows FCC KDB 789033 D02 General UNII Test Procedures v02r01.

a) Set RBW = 100 kHz.

b) Set the video bandwidth (VBW) ≥ 3 × RBW.

c) Detector = Peak.

d) Trace mode = max hold.

e) Sweep = auto couple.

f) Allow the trace to stabilize.

g) Measure the maximum width of the emission that is constrained by the frequencies associated with the two outermost amplitude points (upper and lower frequencies) that are attenuated by 6 dB relative to the maximum level measured in the fundamental emission.

5.3.2 DEVIATION FROM STANDARD

No deviation.

5.3.3 TEST SETUP

5.3.4 EUT OPERATION CONDITIONS

The EUT tested system was configured as the statements of 2.4 Unless otherwise a special operating condition is specified in the follows during the testing.

5.3.5 TEST RESULTS

Note: 1. ANT 1 Power> ANT 2 Power, Both ANT 1 and 2 have been test, Only show the worst data of ANT 1.

2. The test data please reference to attachment “STS2309028W10_Appendix 5G WIFI”.

6. MAXIMUM CONDUCTED OUTPUT POWER

6.1 LIMIT

For mobile and portable client devices in the 5.15-5.25 GHz band, the maximum conducted output power over the frequency band of operation shall not exceed 250 mW provided the maximum antenna gain does not exceed 6 dBi. If transmitting antennas of directional gain greater than 6 dBi are used, both the maximum conducted output power and the maximum power spectral density shall be reduced by the amount in dB that the directional gain of the antenna exceeds 6 dBi.

For the 5.25-5.35 GHz and 5.47-5.725 GHz bands, the maximum conducted output power over the frequency bands of operation shall not exceed the lesser of 250 mW or 11 dBm + 10 log B, where B is the 26 dB emission bandwidth in megahertz,If transmitting antennas of directional gain greater than 6 dBi are used.

For the band 5.725-5.85 GHz, the maximum conducted output power over the frequency band of operation shall not exceed 1 W. If transmitting antennas of directional gain greater than 6 dBi are used.

FCC Part15 (15.407) , Subpart E				
Section	Test Item	Limit	Frequency Range (MHz)	Result
15.407(a) (1) (iv)	Peak Output Power	0.25 watt	5150-5250	PASS
		The lesser of 250 mW or 11 dBm + 10 log (26 dB emission bandwidth)	5250-5350 5470-5725	
15.407(a) (3)		1 watt	5725-5895	

6.2 TEST PROCEDURE

The EUT was directly connected to the Power Sensor&PC

6.3 DEVIATION FROM STANDARD

No deviation.

6.4 TEST SETUP

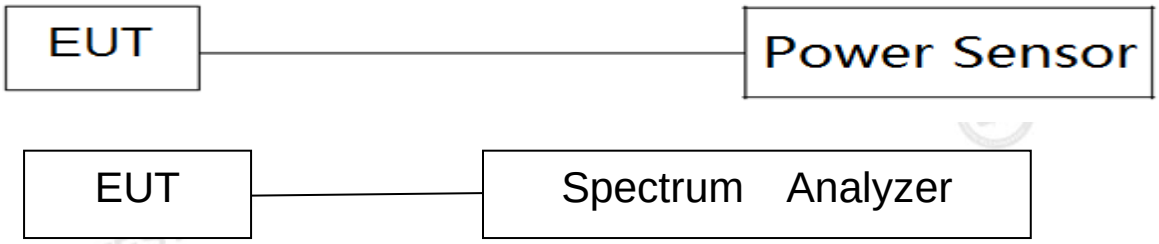

6.5 EUT OPERATION CONDITIONS

The EUT tested system was configured as the statements of 5 Unless otherwise a special operating condition is specified in the follows during the testing.

6.6 TEST RESULTS

Note: The test data please reference to attachment “STS2309028W10_Appendix 5G WIFI”.

7. AUTOMATICALLY DISCONTINUE TRANSMISSION

7.1 LIMIT OF AUTOMATICALLY DISCONTINUE TRANSMISSION

The device shall automatically discontinue transmission in case of either absence of information to transmit or operational failure. These provisions are not intended to preclude the transmission of control or signaling information or the use of repetitive codes used by certain digital technologies to complete frame or burst intervals. Applicants shall include in their application for equipment authorization to describe how this requirement is met.

7.2 TEST RESULT OF AUTOMATICALLY DISCONTINUE TRANSMISSION

During no any information transmission, the EUT can automatically discontinue transmission and become standby mode for power saving. The EUT can detect the controlling signal of ACK message transmitting from remote device and verify whether it shall resend or discontinue transmission

8. ANTENNA REQUIREMENT

8.1 STANDARD REQUIREMENT

15.203 requirement: For intentional device, according to 15.203: an intentional radiator shall be designed to ensure that no antenna other than that furnished by the responsible party shall be used with the device.

8.2 EUT ANTENNA

The EUT antenna is FPC Antenna Antenna. It comply with the standard requirement.

APPENDIX - PHOTOS OF TEST SETUP

Note: See test photos in setup photo document for the actual connections between Product and support equipment.

※※※※※END OF THE REPORT※※※※※