Specification

SLT82-48K

1. Product overview

1.1. Description: Based on Telink8258F512ET32 chip design, supporting Bluetooth ® LE5.0; SIG-Mesh is supported. The module has Bluetooth mesh networking function; The devices communicate through peer-to-peer star network and use Bluetooth broadcast to ensure timely response in case of multiple devices. It is mainly used in intelligent light control, intelligent wearable and other Internet of Things fields; It can meet the requirements of low power consumption, low delay and low cost wireless data communication.

1.2. Features

1.2.1. General Features

- Compatible with Bluetooth core specification V5.0
- Support BLE Low speed rate
- Support GATT(HOGP)profile V1.0上的BLE HID
- Support general model text mode(GAP)
- Compatible with SIG Mesh standard V1.0
- BLE Mesh Friend、Proxy、Relay Or low-power node

- BLE Mesh function: Over-the-air upgrade via Mesh (OTA)

1.2.2.RF characteristics

- Built-in BLE/802.15.4/2.4G Hz RF transceiver, Can work globally 2.4GHz ISM Frequency band
- Compatible with Bluetooth V5.0, 1Mbps, 2Mbps; Long Range125kbps and 500kbps.
- Compatible with IEEE802.15.4, 250kbps.
- 2.4GHz proprietary 1Mbps/2Mbps/250kbps/500kbps mode, supporting adaptive frequency hopping function.
- ANT Mode
- Receiving sensitivity : -96dBm@BLE 1Mbps , -99.5dBm@IEEE802.15.4 250kbps, -93dBm@BLE 2Mbps, -99dBm@BLE 500kbps, -101dBm@BLE 125kbps
- Single-pin antenna interface
- +/- 1dB precision RSSI detection
- Automatic confirmation, retransmission and flow control
- Support Full-function BLE positioning.

1.2.3.Power supply features

- Embedded LDO、DCDC
- Support low battery detection

- Power supply Voltage: 1.8V~3.6V
- Multi-level power management to reduce power consumption
- Low power consumption:

① RX mode: 5.3mA

② Deep Sleep(No SRAM Keep): 0.4uA

③ Deep Sleep(SRAM Keep): 1uA(8kB SRAM Keep), 1.2uA(16kB SRAM Keep), 1.4uA(32kB SRAM Keep)

1.3. Function block diagram

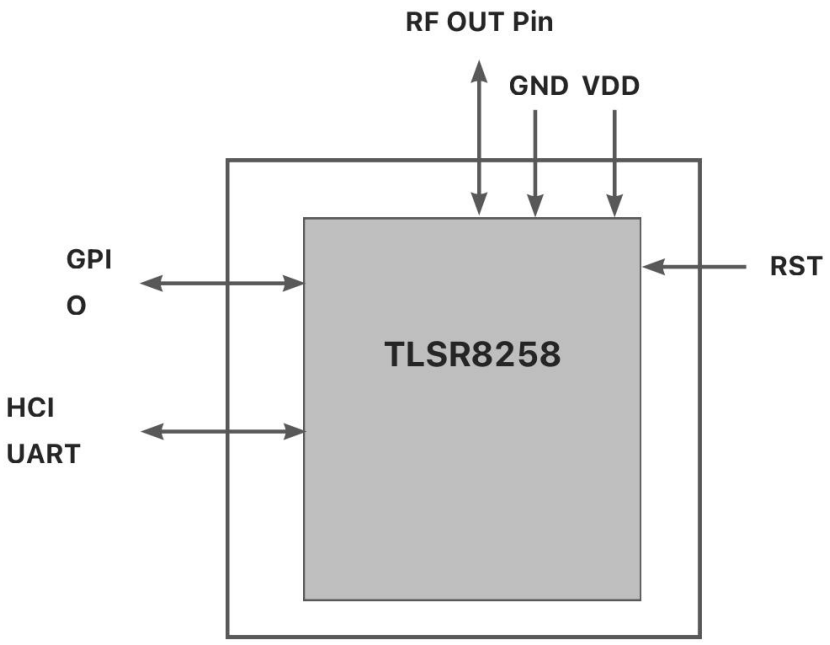

Picture 1-3 Function Block Diagram

2. Electrical parameters

2.1. Absolute maximum rated parameter

Item	Sym.	Min	Max	Unit
Supply Voltage	VDD	-0.3	3.6	V
Voltage on Input Pin	V_{In}	-0.3	VDD+0.3	V
Output Voltage	V_{Out}	0	VDD	V
Storage temperature Range	T_{Str}	-65	150	℃
Soldering Temperature	T_{Sld}	-	260	℃

Form 2-1 Absolute maximum rated parameter

2.2. Recommended working conditions

Item	Sym.	Min	Typ.	Max	Unit
Power-supply voltage	VDD	1.8	3.3	3.6	V
Supply rise time (from 1.6V to 1.8V)	t_R	-	-	10	ms
Operating Temperature Range	T_{Opr}	-40	-	85	℃

2.3. DC characteristics

Item	Sym.	Min	Typ.	Max	Unit
RX current	I_{Rx}	-	TBD	-	mA
TX current	I_{Tx}	TBD	TBD	TBD	mA
Deep sleep with 8kB SRAM retention	I_{Deep1}	-	1	3.1	uA
Deep sleep with 16kB SRAM retention		-	1.2	3.3	uA
Deep sleep with 32kB SRAM retention		-	1.4	3.5	uA
Deep sleep without SRAM retention	I_{Deep2}	-	0.4	-	uA

2-3 (VDD=3.3V,T=25℃)

2.4. AC characteristics

Item	Sym.	Min	Typ.	Max	Unit
Digital inputs/outputs					
Input high voltage	VIH	0.7VDD	-	VDD	V
Input low voltage	VIL	VSS	-	0.3VDD	V
Output high voltage	VOH	0.9VDD	-	VDD	V
Output low voltage	VOL	VSS	-	0.1VDD	V

2-4 (VDD=3.3V,T=25℃)

3. Appearance and Dimension

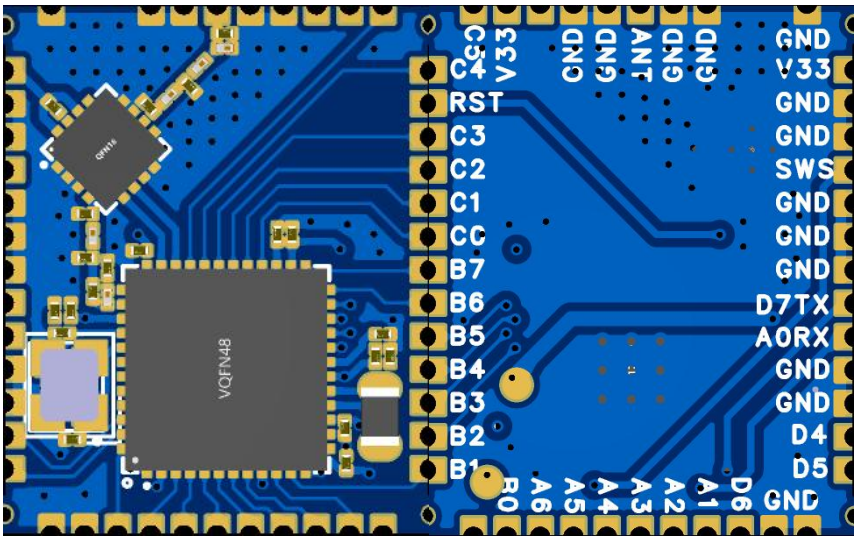

4.Pin configuration and function

4.1.Module Pin diagram

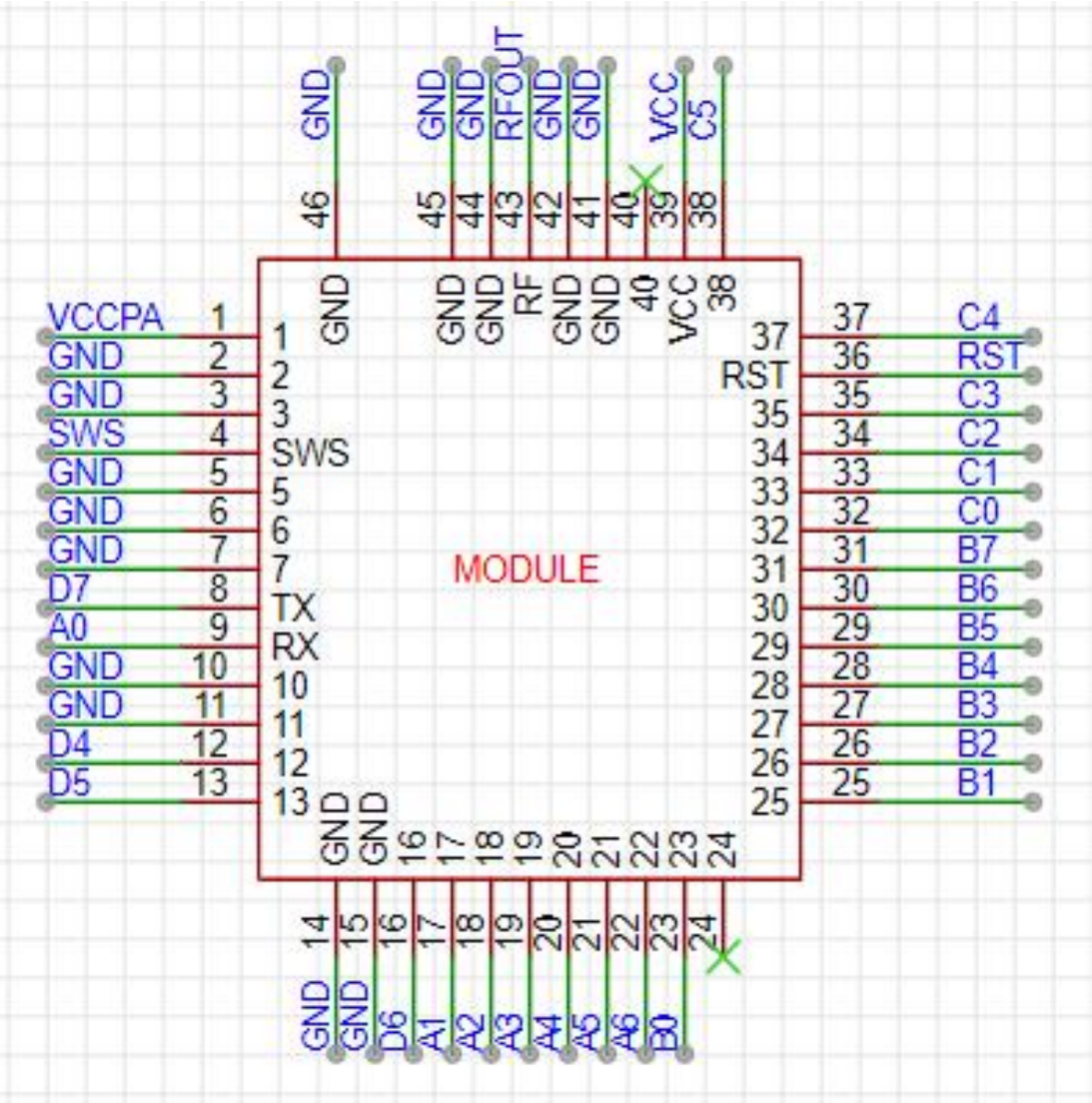

4.2. Pin function

Pin	Name	Type	Description
1	VCCPA	PWR	Supply Voltage input
2	GND	Ground	Ground
3	GND	Ground	Ground
4	SWS	Digital I/O	GPIO:PA[7] Single wire slave/UART_RTS
5	GND	Ground	Ground
6	GND	Ground	Ground
7	GND	Ground	Ground
8	D7	Digital I/O	GPIO:PD[7]
9	A0	Digital I/O	GPIO:PA[0]
10	GND	Ground	Ground
11	GND	Ground	Ground
12	D4	Digital I/O	GPIO:PD[4]
13	D5	Digital I/O	GPIO:PD[5]
14	GND	Ground	Ground
15	GND	Ground	Ground
16	D6	Digital I/O	GPIO:PD[6]
17	A1	Digital I/O	GPIO:PA[1]

18	A2	Digital I/O	GPIO:PA[2]
19	A3	Digital I/O	GPIO:PA[3]
20	A4	Digital I/O	GPIO:PA[4]
21	A5	Digital I/O	GPIO:PA[5]
22	A6	Digital I/O	GPIO:PA[6]
23	B0	Digital I/O	GPIO:PB[0]
24	NC	Digital I/O	NC
25	B1	Digital I/O	GPIO:PB[1]
26	B2	Digital I/O	GPIO:PB[2]
27	B3	Digital I/O	GPIO:PB[3]
28	B4	Digital I/O	GPIO:PB[4]
29	B5	Digital I/O	GPIO:PB[5]
30	B6	Digital I/O	GPIO:PB[6]
31	B7	Digital I/O	GPIO:PB[7]
32	C0	Digital I/O	GPIO:PC[0]
33	C1	Digital I/O	GPIO:PC[1]
34	C2	Digital I/O	GPIO:PC[2]
35	C3	Digital I/O	GPIO:PC[3]
36	RST	RESET	Power on reset, active low
37	C4	Digital I/O	GPIO:PC[4]

38	C5	Digital I/O	GPIO:PC[5]
39	VCC	PWR	Supply Voltage input
40	NC	Digital I/O	NC
41	GND	Ground	Ground
42	GND	Ground	Ground
43	RF	Analog	RF antenna port
44	GND	Ground	Ground
45	GND	Ground	Ground
46	GND	Ground	Ground

5. Schematic diagram

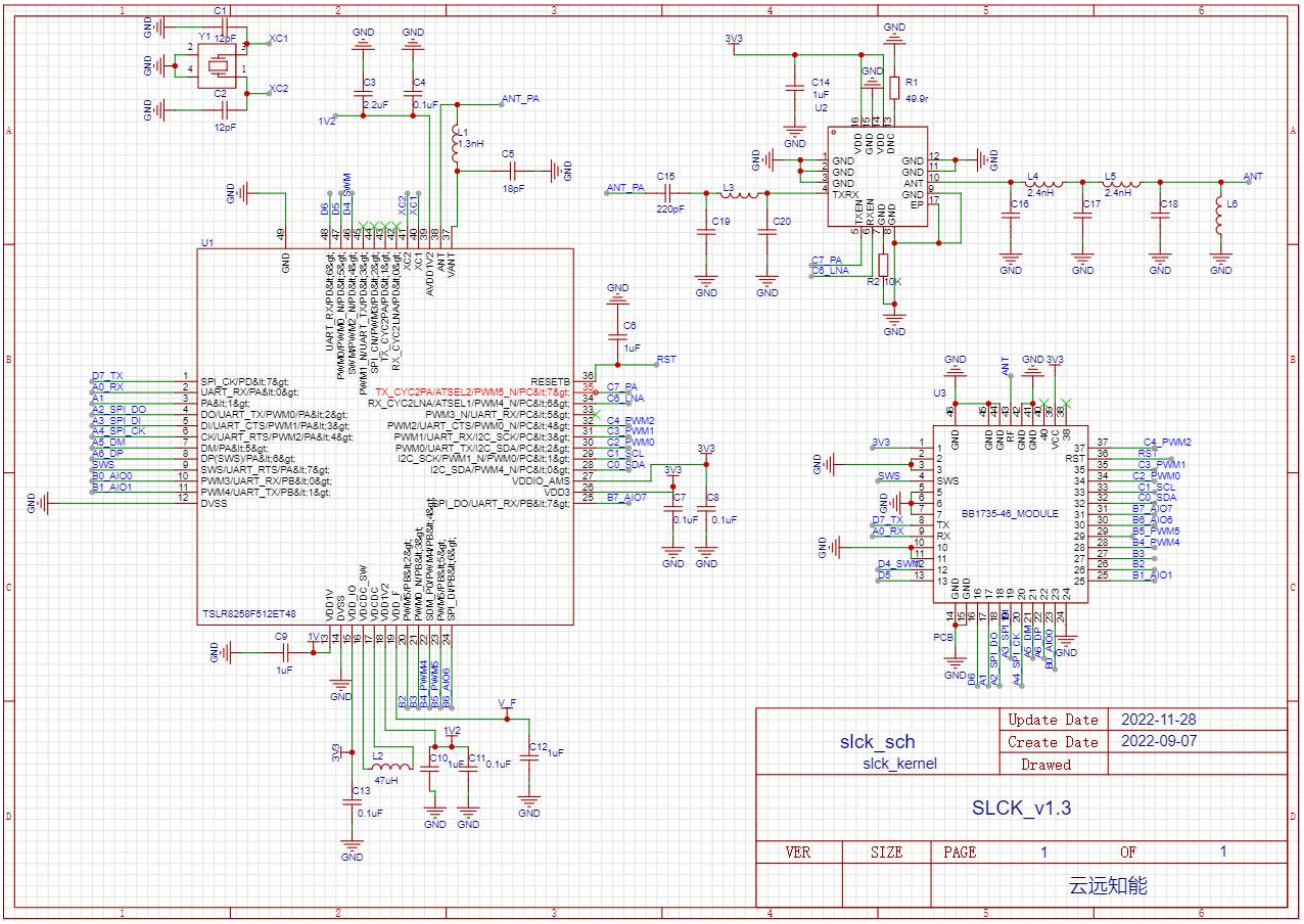

FCC WARNING

FCC Caution: Any changes or modifications not expressly approved by the party responsible for compliance could void the user's authority to operate this equipment.

This device complies with Part 15 of the FCC Rules. Operation is subject to the following two conditions:

(1) This device may not cause harmful interference, and (2) this device must accept any interference received, including interference that may cause undesired operation.

This device and its antenna(s) must not be co-located or operating in conjunction with any other antenna or transmitter.

15.105 Information to the user.

(b) For a Class B digital device or peripheral, the instructions furnished the user shall include the following or similar statement, placed in a prominent location in the text of the manual:

Note: This equipment has been tested and found to comply with the limits for a Class B digital device, pursuant to part 15 of the FCC Rules.

These limits are designed to provide reasonable protection against harmful interference in a residential installation. This equipment generates, uses and can radiate radio frequency energy and, if not installed and used in accordance with the instructions, may cause harmful interference to radio communications. However, there is no guarantee that interference will not occur in a particular installation. If this equipment does cause harmful interference to radio or television reception, which can be determined by turning the equipment off and on, the user is encouraged to try to correct the interference by one or more of the following measures:

—Reorient or relocate the receiving antenna.

—Increase the separation between the equipment and receiver.

—Connect the equipment into an outlet on a circuit different from that to which the receiver is connected.

—Consult the dealer or an experienced radio/TV technician for help.

This equipment complies with FCC radiation exposure limits set forth for an uncontrolled environment. This equipment should be installed and operated with minimum distance 20 cm between the radiator and your body.

Radiation Exposure Statement:

This equipment complies with FCC radiation exposure limits set forth for an uncontrolled environment.

This transmitter must not be co-located or operating in conjunction with any other antenna or transmitter.

The availability of some specific channels and/or operational frequency bands are country dependent and are firmware programmed at the factory to match the intended destination.

The firmware setting is not accessible by the end user.

The final end product must be labelled in a visible area with the following:

“Contains Transmitter Module SLT82-48K”

Requirement per KDB996369 D03

2.2 List of applicable FCC rules

List the FCC rules that are applicable to the modular transmitter. These are the rules that specifically establish the bands of operation, the power, spurious emissions, and operating fundamental frequencies. DO NOT list compliance to unintentional-radiator rules (Part 15 Subpart B) since that is not a condition of a module grant that is extended to a host manufacturer. See also Section 2.10 below concerning the need to notify host manufacturers that further testing is required.3

Explanation: This module meets the requirements of FCC part 15C(15.247).it specifically establish the 6dB Bandwidth,, Peak Output Power, Radiated Spurious Emission, Power Spectral Density, Restricted Band of Operation and Band Edge (Out of Band Emissions) Measurement

2.3 Summarize the specific operational use conditions

Describe use conditions that are applicable to the modular transmitter, including for example any limits on antennas, etc. For example, if point-to-point antennas are used that require reduction in power or compensation for cable loss, then this information must be in the instructions. If the use condition limitations extend to professional users, then instructions must state that this information also extends to the host manufacturer's instruction manual. In addition, certain information may also be needed, such as peak gain per frequency band and minimum gain, specifically for master devices in 5 GHz DFS bands.

Explanation: The EUT has one FPC antenna, Yes, the module contains a permanently attached antenna, The antenna gain is 2.73dBi.

2.4 Limited module procedures

If a modular transmitter is approved as a "limited module," then the module manufacturer isresponsible for approving the host environment that the limited module is used with. The manufacturer of a limited module must describe, both in the filing and in the installation instructions, the alternative means that the limited module manufacturer uses to verify that the host meets the necessary requirements to satisfy the module limiting conditions.

A limited module manufacturer has the flexibility to define its alternative method to address the conditions that limit the initial approval, such as: shielding, minimum signaling amplitude, buffered modulation/data inputs, or power supply regulation. The alternative method could include that the limited module manufacturer reviews detailed test data or host designs prior to giving the host manufacturer approval.

This limited module procedure is also applicable for RF exposure evaluation when it is necessary to demonstrate compliance in a specific host. The module manufacturer must state how control of the product into which the modular transmitter will be installed will be maintained such that full compliance of the product is always ensured. For additional hosts other than the specific host originally granted with a limited

module, a Class II permissive change is required on the module grant to register the additional host as a specific host also approved with the module.
Explanation: The module is a single module.

2.5 Trace antenna designs

For a modular transmitter with trace antenna designs, see the guidance in Question 11 of KDB Publication 996369 D02 FAQ – Modules for Micro-Strip Antennas and traces. The integration information shall include for the TCB review the integration instructions for the following aspects: layout of trace design, parts list (BOM), antenna, connectors, and isolation requirements.

a) Information that includes permitted variances (e.g., trace boundary limits, thickness, length, width, shape(s), dielectric constant, and impedance as applicable for each type of antenna);

b) Each design shall be considered a different type (e.g., antenna length in multiple(s) of frequency, the wavelength, and antenna shape (traces in phase) can affect antenna gain and must be considered);

c) The parameters shall be provided in a manner permitting host manufacturers to design the printed circuit (PC) board layout;

d) Appropriate parts by manufacturer and specifications;

e) Test procedures for design verification; and

f) Production test procedures for ensuring compliance.

The module grantee shall provide a notice that any deviation(s) from the defined parameters of the antenna trace, as described by the instructions, require that the host product manufacturer must notify the module grantee that they wish to change the antenna trace design. In this case, a Class II permissive change application is required to be filed by the grantee, or the host manufacturer can take responsibility through the change in FCC ID (new application) procedure followed by a Class II permissive change application.

Explanation: Yes, The module with trace antenna designs, and This manual has been shown the layout of trace design,, antenna, connectors, and isolation requirements.

2.6 RF exposure considerations

It is essential for module grantees to clearly and explicitly state the RF exposure conditions that permit a host product manufacturer to use the module. Two types of instructions are required for RF exposure information: (1) to the host product manufacturer, to define the application conditions (mobile, portable – xx cm from a person's body); and (2) additional text needed for the host product manufacturer to provide to end users in their end-product manuals. If RF exposure statements and use conditions are not provided, then the host product manufacturer is required to take responsibility of the module through a change in FCC ID (new application).

Explanation: This module complies with FCC RF radiation exposure limits set forth for an uncontrolled environment, This equipment should be installed and operated with a minimum distance of 20 centimeters between the radiator and your body." This module is designed to comply with the FCC statement,
FCC ID 2A96J-SLT8248K

2.7 Antennas

A list of antennas included in the application for certification must be provided in the instructions. For modular transmitters approved as limited modules, all applicable professional installer instructions must be included as part of the information to the host product manufacturer. The antenna list shall also identify the antenna types (monopole, PIFA, dipole, etc. (note that for example an "omni-directional antenna" is not considered to be a specific "antenna type")).

For situations where the host product manufacturer is responsible for an external connector, for example with an RF pin and antenna trace design, the integration instructions shall inform the installer that unique antenna connector must be used on the Part 15 authorized transmitters used in the host product. The module manufacturers shall provide a list of acceptable unique connectors.

Explanation: The EUT has one FPCB antenna, Yes, the module contains a permanently attached antenna, The antenna gain is 2.73dBi.

2.8 Label and compliance information

Grantees are responsible for the continued compliance of their modules to the FCC rules. This

includes advising host product manufacturers that they need to provide a physical or e-label stating "Contains FCC ID" with their finished product. See Guidelines for Labeling and User Information for RF Devices – KDB Publication 784748.

Explanation: The host system using this module, should have label in a visible area indicated the following texts: "Contains FCC ID: 2A96J-SLT8248K

2.9 Information on test modes and additional testing requirements[5]

Additional guidance for testing host products is given in KDB Publication 996369 D04 Module Integration Guide. Test modes should take into consideration different operational conditions for a stand-alone modular transmitter in a host, as well as for multiple simultaneously transmitting modules or other transmitters in a host product.

The grantee should provide information on how to configure test modes for host product evaluation for different operational conditions for a stand-alone modular transmitter in a host, versus with multiple, simultaneously transmitting modules or other transmitters in a host.

Grantees can increase the utility of their modular transmitters by providing special means, modes, or instructions that simulates or characterizes a connection by enabling a transmitter. This can greatly simplify a host manufacturer's determination that a module as installed in a host complies with FCC requirements.

Explanation: WiFiRanger, A LinOra Company can increase the utility of our modular transmitters by providing instructions that simulates or characterizes a connection by enabling a transmitter.

2.10 Additional testing, Part 15 Subpart B disclaimer

The grantee should include a statement that the modular transmitter is only FCC authorized for the specific rule parts (i.e., FCC transmitter rules) listed on the grant, and that the host product manufacturer is responsible for compliance to any other FCC rules that apply to the host not covered by the modular transmitter grant of certification. If the grantee markets their product as being Part 15

Subpart B compliant (when it also contains unintentional-radiator digital circuity), then the grantee shall provide a notice stating that the final host product still requires Part 15 Subpart B compliance testing with the modular transmitter installed.

Explanation: The module without unintentional-radiator digital circuity, so the module does not require an evaluation by FCC Part 15 Subpart B. The host shoule be evaluated by the FCC Subpart B.

严禁复制

IC statement

This device contains licence-exempt transmitter(s)/receiver(s) that comply with Innovation, Science
and Economic DevelopmentCanada's licence-exempt RSS(s). Operation is subject to the following
two conditions:
(1) This device may not cause interference.
(2) This device must accept any interference, including interference that may cause undesired operation of the device.
The term "IC: " before the certification/registration number only signifies that the Industry Canada
technical specifications were met.
This product meets the applicable Industry Canada technical specifications.
Cet appareil contient des émetteurs / récepteurs exemptés de licence conformes aux RSS (RSS)
d'Innovation, Sciences etDéveloppement économique Canada. L'exploitation est autorisée aux
deux conditions suivantes : (1) l'appareil ne doit pasproduire de brouillage,et (2) l'utilisateur de
l'appareil doit accepter tout brouillage radioélectrique subi, même si le brouillage est susceptible
d'en compromettre le fonctionnement.
L'émetteur/récepteur exempt de licence contenu dans le présent appareil est conforme auxCNR
d'Innovation, Sciences et Développement économique Canada applicables aux appareils radio
exempts de licence.
L'exploitation est autorisée aux deux conditions suivantes :
1)L'appareil ne doit pas produire de brouillage;
2)L'appareil doit accepter tout brouillage radioélectrique subi, même si le brouillage est susceptible
d'en compromettre lefonctionnement.
Please notice that if the ISED certification number is not visible when the module is installed inside
another device, then theoutside of the device into which the module is installed o display a label
referring to the enclosed module. This exteriorlabel can use wording such as the following:
"Contains IC: 30076-SLT8248K" any similar wording that expresses the same meaningmay be used.
l'appareil hôte doit porter une étiquette donnant le numéro de certification du module d'Industrie
Canada, précédédes mots «Contient un module d'émission », du mot «IC: 30076-SLT8248K» ou
d'une formulation similaireexprimant le même sens, comme suit
The device meets the exemption from the routine evaluation limits in section 2.5 of RSS 102 andcompliance with RSS-102 RF exposure, users can obtain Canadian information on RF exposure andcompliance.
Le dispositif rencontre l'exemption des limites courantes d'évaluation dans la section 2.5 de RSS
102 etla conformité
à l'expositionde RSS-102 rf, utilisateurs peut obtenir l'information canadienne surl'exposition et la
conformitéde rf.
This transmitter must not be co-located or operating in conjunction with any other antenna ortransmitter. This equipment should be installed and operated with a minimum distance of 20centimeters between the radiator and your body.
Cet émetteur ne doit pas être Co-placéoune fonctionnant en même temps qu'aucune autre antenne ouémetteur. Cet équipementdevrait être installé et actionné avec une distance minimum
de 20 centimètres entre le radiateur et votre corps.