Installation Manual

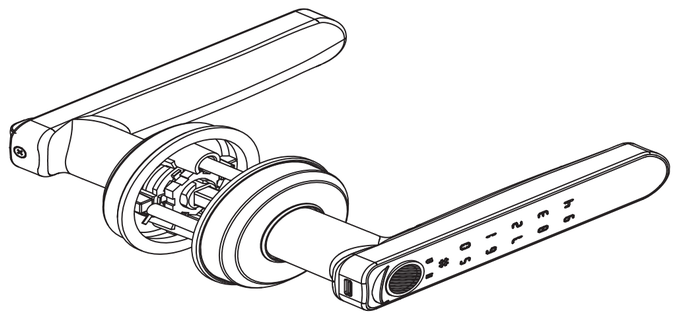

B203A PRO

Product Description

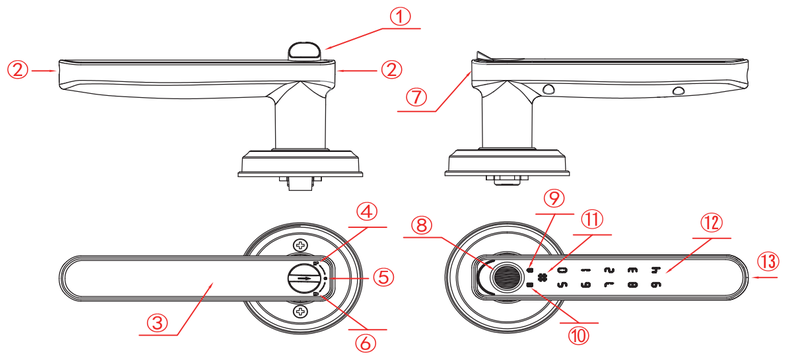

1.Thumb turn
2.Screw C : Secure the battery compartment
3.Battery Compartment
4.Icon of Passage Mode
5.Icon of Normal Mode
6.Icon of Privacy Mode
7.Type-C Interface
8.Fingerprint reader
9.Low Power Indicator
10.Unlock Indicator
11. # Key: Confirm the password you entered or re-enter the password by pressing it after entering wrong password.
12.Keypad (Initial Password:0123456#)
13.Keyhole

Installation Guide

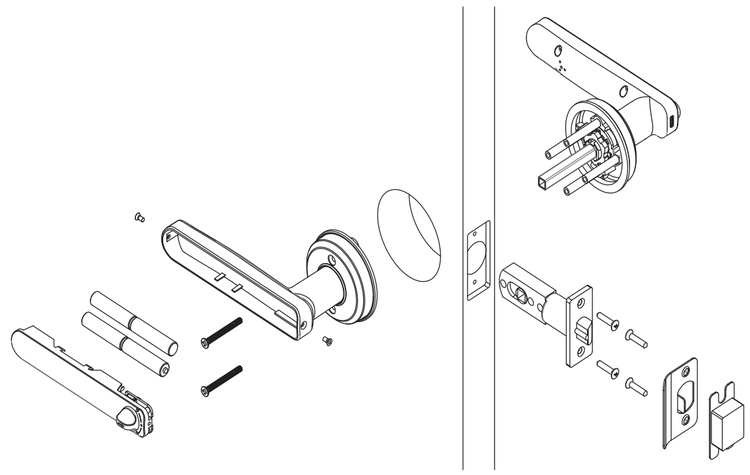

Packing List

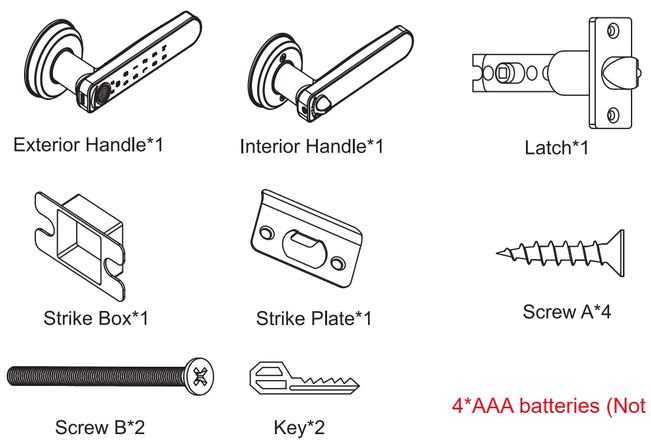

Exterior Handle*1
Interior Handle*1
Latch*1
Strike Box*1
Strike Plate*1
Screw A*4
Screw B*2
Key*2

4*AAA batteries (Not included)

TOOL REQUIRED: **Do not use an electric screwdriver during installation.**

1.Check the Door's Dimensions

Step 1 : Measure to confirm that the door is between (35mm~54mm) thick.

Step 2 : Measure to confirm that the hole in the door is(54mm).

Step 3 : Measure to confirm that the backset is either-(60-70mm).

Step 4 : Measure to confirm that the hole in the door edge is 1"(25 mm).

Latch Note: If drilling a new door, use the supplied template.

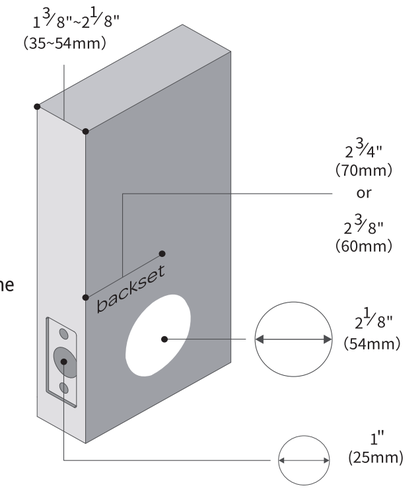

2.Install Latch & Strike Plate

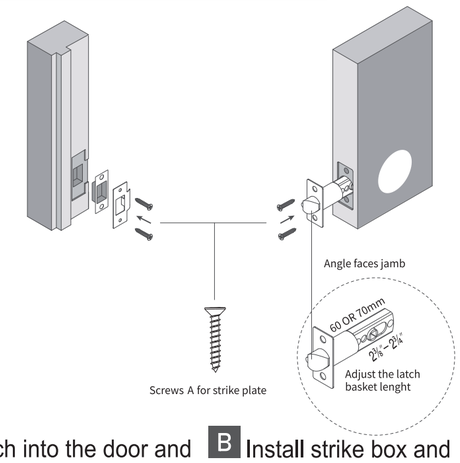

A Install latch into the door and tighten Screw A to fix the latch.

B Install strike box and plate with Screw A tinto the door frame.

⚠ The bevel of the latch shall be aligned to the bevel of the strike plate.

3.Install Batteries

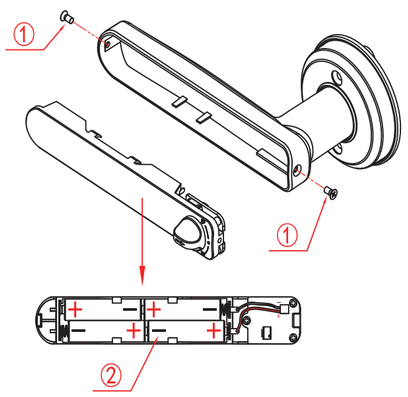

A Use a screwdriver to disassembly battery cover.

B Load 4*AAA batteries into battery compartment according to positive and negative pole as shown.

⚠ PLEASE DO NOT USE LITHIUM BATTERIES OR RECHARGABLE BATTERIES. NOT RECHARGEABLE.

4.Install Exterior Handle

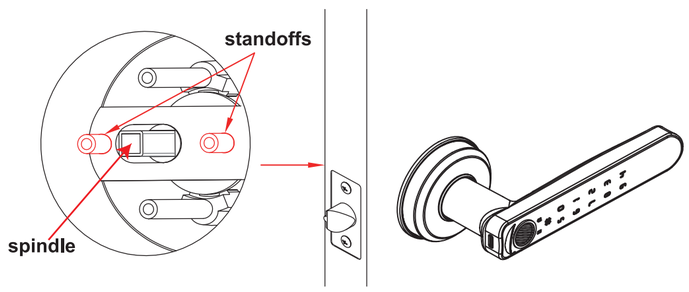

A Insert the spindle through the square-shaped(center)hole in the latch and standoffs going through the circular holes in the latch.

⚠ **Keep the exterior handle perpendicular to door edge.**

5.Install Interior Handle

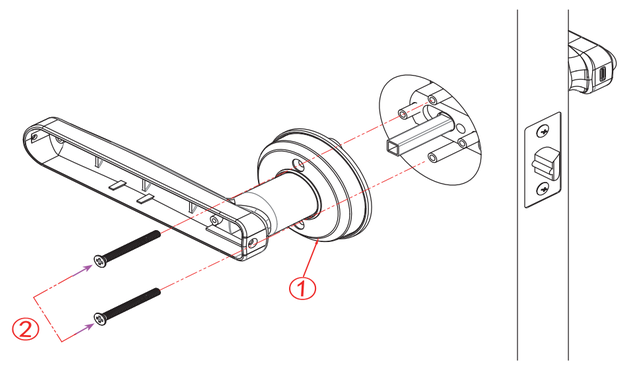

A Align the upper and lower standoffs and insert 2 pcs screw B.

B Tighten them to secure the interior handle by screwdriver.

6.Install Interior Handle

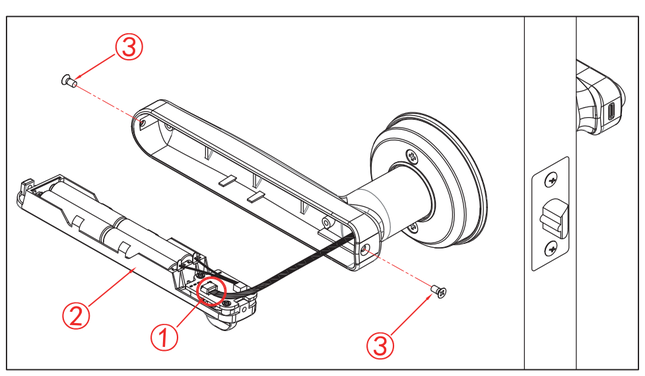

A Connect the control wire male plug to female socket.Then close the battery cover.

B Tighten 2 pcs screw C to secure the battery compartment.

User Manual

Operation Guide

Restore the Factory Setting

1.Rotate the thumb turn from "● " to " 🔒 " on the left,then turn it to " 🔒 ".Repeat the step 5 times.
2.Rotate the thumb turn from "● " to " 🔒 " on the left,then turn it to " 🔒 ".Repeat the step 5 times.
After completing these steps,you will hear a long beep and fingerprint reader will flash green.

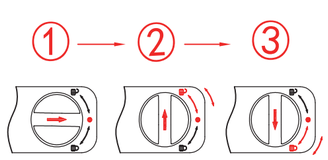

⚠ **After resetting , all fingerprints associated with the lock will be deleted and any fingerprint can unlock the lock.Add an Amin in Smart Life App as soon as possible.**

Low Power Indication

It is time to replace the batteries when the buzzer beeps once and the Unlock indicator flashed red for 10 sec ,after being unlocked by fingerprint or app successfully. Connect a power bank to type-c power port on the exterior handle for emergency power supply.

Key to Unlock

Insert the key into the keyhole and turn the key 120°,then turn the exterior handle to open the door.

Normal Mode

In Normal Mode, the lock will automatically lock in 5 seconds after fingerprints unlocking.
Both Admin and shared members can unlock with their fingerprints.

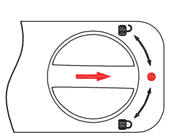

Passage Mode

In Passage Mode, the lock will stay unlocked until it is unlocked manually.
Auto Lock will be disabled.

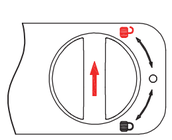

Privacy Mode

In Privacy Mode,both Admin and shared members can unlock via Smart Life App.
Only Admin can unlock with their fingerprints.

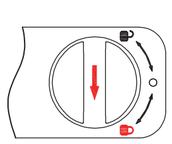

Product Features

Fingerprint Unlock
Password Unlock
APP Unlock
Key Unlock
Auto Lock
Normal Mode
Passage Mode
Mute Mode
History Log
APP Unlock/Lock
Authorized Admin
Settings

1.Register Your Account

Download “Smart Life”APP in Google Play or Apple Store.

GET IT ON Google Play
Download on the App Store

Register or Log in an Account

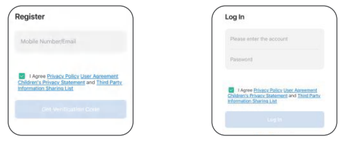

2.Pairing the Lock

A Enable phone Bluetooth and Wi-Fi or Mobile Network (within 3meters)

B Tap "Add device” and touch fingerprint screen or keypadactivated to automatically search.

Successful connection! You can click this icon" ∠ "to rename the lock or just click"-Done" to complete the pairing.

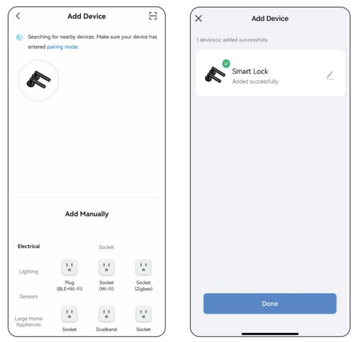

3.App Unlock/Lock

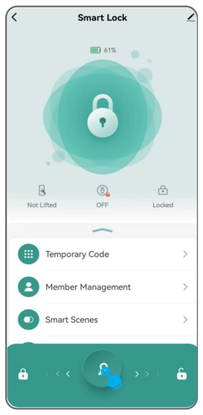

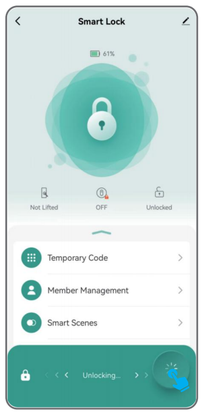

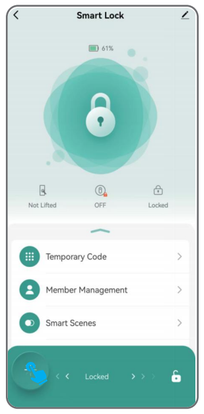

Unlock via Bluetooth
Unlock: Hold and drag the icon " " to the icon " "

Lock via Bluetooth
Lock: Hold and drag the icon " " to the icon " "

4.Temporary Code

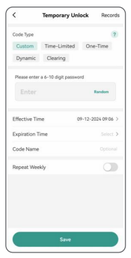

Custom Code:
Follow the instructions on the page to fill in the the blanks.

⚠ **Warm tips**:
1. Password Privacy: Save your password as the app won't display it.
2. Please end with "#" for the correct password entry, or it will fail.
3. If you make a mistake when entering your password, you need to tap "#"and re-enter it.

⚠ Enter random key to wake up the keypad before you enter code

Time-Limited Code:
Use it at least once within 24 hours after it takes effect.otherwise, it becomes invalid. Not to be modifed or renamed.
otherwise, it becomes invalid. Not to be modifed or renamed.

⚠ **Warm tips**:
Clearing:
1. Select the clear type on the page to clear all or one of time-limited code.
2. Click "get code" on the page that you can get a random code.
3. Enter the random code on the lock that will clear the time-limited code which you chose.

4.Temporary Code

Dynamic Code:
Its validity period is 5 minutes. It can be used multiple times before it expires.

One-Time Code:
One-Time Code: Its validity period is 6 hours. It can be used only once before it expires.

⚠ Enter random key to wake up the keypad before you enter code

5.Member Management

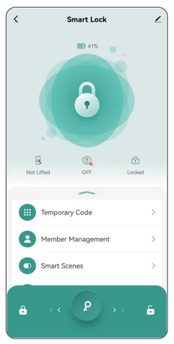

Select “Member Managment” and tap “+” to add/share/ cancel members.

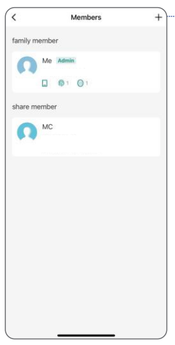

Add or Share Member

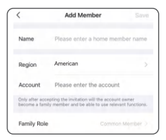

Add Member (Common Member/ Administrator)

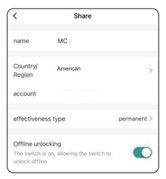

Share Member

6.Fingerprint Input

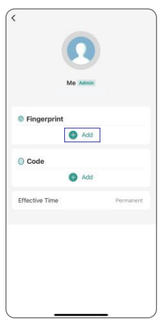

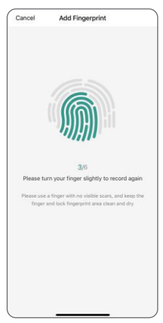

⚠ If you get an error when entering your fingerprints and your fingerprints turn red, you need to enter them at a different angle.

Warm Tips:
1. Please keep your fingers and sensing area clean and dry before inputing your fingerprint.
2.For improving the fingerprint recognition rate of the elderly,children or people with light fingerprints, it is necessary to create more fingerprint files and input different angles of their fingerprints.
3.For your privacy, your fingerprints will be stored in the device only.

7.Code Input

Code Input: Tap“Add code" and Enter a 6-10 digit password and set a code name.

⚠ **Warm tips**:
1. Password Privacy: Save your password as the app won't display it.
2. Please end with "#" for the correct password entry, or it will fail.
3. If you make a mistake when entering your password, you need to tap "#"and re-enter it.

15614 202488 65783
PASSWORD
RANDOM DIGITS

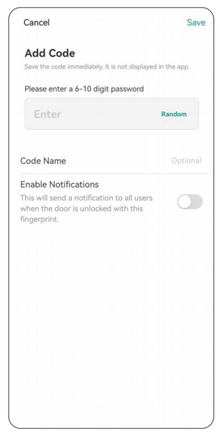

8.More Setting

Choose More to turn on/off Remote Unlockand set up the Lock Volumeto Mute or Normal.

⚠ **Warm tips**:Remote unlocking requires a gateway connection.

Technical Parameters

Name	Parameter Description
Fingerprint Capacity	50 PCS
Password Capacity	50 PCS
Voltage Range	4.6~6.5V
Stand-by current	< 90μA
Working Current	< 500mA
Working Temperature	23℉~131℉(-5℃~55℃)
Low Power warning	4.8±0.2V

Action	Buzzer	Indicator
Power on	Beep once	Inactive
Fingerprint added successfully	Beep once	Blinks green 4 times
Unlocking successfully	Beep once	Blinks green 4 times
Unlocking failure	Beep once	Blinks red 4 times
Low power warning	Beep once	Blinks red for 10 sec
Resetting successful	Long Beep	Blinks green once

This device complies with Part 15 of the FCC Rules. Operation is subject to the following two conditions: (1) this device may not cause harmful interference, and (2) this device must accept any interference received, including interference that may cause undesired operation

NOTE: This equipment has been tested and found to comply with the limits for a Class B digital device, pursuant to Part 15 of the FCC Rules. These limits are designed to provide reasonable protection against harmful interference in a residential installation. This equipment generates, uses and can radiate radio frequency energy and, if not installed and used in accordance with the instructions, may cause harmful interference to radio communications. However, there is no guarantee that interference will not occur in a particular installation.
If this equipment does cause harmful interference to radio or television reception, which can be determined by turning the equipment off and on, the user is encouraged to try to correct the interference by one or more of the following measures:
-- Reorient or relocate the receiving antenna.
-- Increase the separation between the equipment and receiver.
-- Connect the equipment into an outlet on a circuit different from that to which the receiver is connected.
-- Consult the dealer or an experienced radio/TV technician for help.

Warning: changes or modifications not expressly approved by the party responsible for compliance could void the user's authority to operate the equipment

Radiation Exposure Statement
This equipment complies with FCC radiation exposure limits set forth for an uncontrolled environment.
This equipment should be installed and operated with minimum distance 20cm between the radiator and your body.