CHARGECORE

AC003P US Standard

Commercial Use AC Charger

Installation& Instruction Manual

AC003P US Standard

Commercial Use AC Charger

Installation& Instruction Manual

Legal Statement

This document is an integral part of the technical documentation "Charging infrastructure" and is protected by copyright. Any use outside the strict limits of copyright law without written consent is prohibited. This also applies to copies, translations, photographed versions of documents, and documents stored and processed on electronic media.

Any party that violates this provision is obliged to compensate for the loss!

Disclaimer Guarantee and Limitation of Liability

- All information, specifications and illustrations in this manual are based on the latest information available at the time of printing, and images and illustrations depicted in the manual repertoire may differ slightly from the actual.
- The Company reserves the right to make changes at any time without notice. Although this manual has been carefully checked, it does not guarantee the completeness and accuracy of the contents of the manual, including but not limited to product specifications, features, illustrations, etc.
- Before operating or maintaining this machine, please read this manual carefully and pay special attention to the safety warnings and precautions.

CONTENTS

1.GENERAL OUTLINE 5
1.1PURPOSE 5
1.2APPLICATION SCOPE.....5
1.3WARNING SYMBOL DEFINITION 5
1.4SAFETY PRECAUTIONS.....6
2. PREPARATION BEFORE INSTALLATION.....9
2.1 INSTALLATION SITE 9
2.2 GENERAL CONSTRUCTION TOOLS 12
2.3 CONSTRUCTION MATERIALS 13
2.4 INSTALLER REQUIREMENTS 14
2.5 CONSTRUCTION DRAWING 15
2.6 EQUIPMENT SPACING 15
2.7 POWER CABLE.....17
2.8 CURRENT & DISTRIBUTION CAPACITY 19
2.9 FIXED FOUNDATION.....20
2.10 GROUNDING/INSULATION RESISTANCE.....20
3.INSTALLATION 17
3.1 UNPACKING INSPECTION 21
3.2 EQUIPMENT INSTALLATION.....24
4.POST -INSTALLATION INSPECTION 27
4.1 INSTALLATION&WIRING 31
4.2 PRE-POWER CHECK 31
4.3 POWER ON 31
5. CHARGE/STOP CHARGE.....28
5.1 PLUG&CHARGE(*optional).....28
5.2 APP CHARGE 32
5.3 STOP CHARGE.....
6. EMERGENCY OPERATION 36
6.1 EMERGENCY STOP FUNCTION 36
6.2 EMERGENCY STOP BUTTON 37
7. COMPLETION INFORMATION 37
APPENDIX 1 37
APPENDIX 2 39
APPENDIX 3 40

1.General Outline

1.1 Purpose

This document is intended to guide construction personnel through the field installation of AC003P AC chargers.

1.2 Application Scope

1.2.1 Applicable equipment type

AC003P AC chargers.

1.2.2 Applicable people

AC003P AC charger installer.

1.3 Warning Symbol Definition

Serial Number	Symbol	Implication
1		Indicates that extreme caution must be exercised or a situation involving hazardous voltage.
2		This is important safety information and must be handled with extreme caution or in situations.
3		Indicates a burn hazard arising from hot areas or areas with high component temperatures.
4		Protective earth connection
5		AC electricity
6		Indicates that the said action must be performed using clothing and/or personal protective equipment provided by the employer.

Sheet 1 Warning symbol definition

1.4 Safety Precautions

For Both FCC & IC application:

This device complies with Part 15 of the FCC Rules / Industry Canada licence-exempt

RSS standard(s). Operation is subject to the following two conditions: (1) this device may not cause harmful interference, and (2) this device must accept any interference received, including interference that may cause undesired operation.

Le présent appareil est conforme aux CNR d'Industrie Canada applicables aux appareils radio exempts de licence. L'exploitation est autorisée aux deux conditions suivantes : (1) l'appareil ne doit pas produire de brouillage, et (2) l'utilisateur de l'appareil doit accepter tout brouillage radioélectrique subi, même si le brouillage est

susceptible d'en compromettre le fonctionnement.

Changes or modifications not expressly approved by the party responsible for compliance could void the user's authority to operate the equipment.

This equipment has been tested and found to comply with the limits for a Class A digital device, pursuant to part 15 of the FCC Rules. These limits are designed to provide reasonable protection against harmful interference when the equipment is operated in a commercial environment. This equipment generates, uses, and can radiate radio frequency energy and, if not installed and used in accordance with the instruction manual, may cause harmful interference to radio communications. Operation of this equipment in a residential area is likely to cause harmful interference in which case the user will be required to correct the interference at his own expense.

Les modifications ou modifications non expressément approuvées par la partie responsable de la conformité pourraient annuler l'autorisation de l'utilisateur de faire fonctionner l'équipement.

Cet équipement a été testé et jugé conforme aux limites pour un appareil numérique de classe a, conformément à la partie 15 des règles de la FCC. Ces limites sont conçues pour fournir une protection raisonnable contre les interférences nuisibles lorsque l'équipement est utilisé dans un environnement commercial. Cet é

quipement génère, utilise et peut émettre de l’énergie de radiofréquence et, s’il n’est pas installé et utilisé conformément au manuel d’instructions, il peut causer des interférences nuisibles aux communications radio. Le fonctionnement de cet équipement dans une zone résidentielle est susceptible de provoquer des interférences nuisibles, auquel cas l’utilisateur sera tenu de corriger ces interférences à ses propres frais.

MPE Requirements

To satisfy FCC / IC RF exposure requirements, a separation distance of 20 cm or more should be maintained between the antenna of this device and persons during device operation.

To ensure compliance, operations at closer than this distance is not recommended.

Les antennes installées doivent être situées de facon à ce que la population ne puisse y être exposée à une distance de moin de 20 cm. Installer les antennes de facon à ce que le personnel ne puisse approcher à 20 cm ou moins de la position centrale de l’ antenne.

La FCC des éltats-unis stipule que cet appareil doit être en tout temps éloigné d’au moins 20 cm des personnes pendant son functionnement.

Before starting operation, please read the operating instructions and precautions carefully to reduce the occurrence of accidents. The "Caution, Caution, Warning, Danger" items in the product and product manuals do not represent all the safety items to be observed, but are intended to supplement the various operational safety precautions.

When performing various operations of our products and equipment, we must comply with the safety codes of the relevant industries and strictly observe the relevant equipment precautions and special safety instructions provided by our company.

Avant de commencer l’opération, veuillez lire attentivement les instructions d’utilisation et les précautions pour réduire la survenance d’accidents. Les articles «attention, attention, avertissement, Danger» du produit et des manuels du produit ne représentent pas tous les éléments de sécurité à observer, mais sont destinés à compléter les diverses mesures de sécurité opérationnelles.

Lorsque nous effectuons diverses opérations de nos produits et équipements, nous devons nous conformer aux codes de sécurité des industries concernées et observer strictement les précautions d'équipement pertinentes et les instructions de sécurité spéciales fournies par notre société.

Security instructions

The internal working voltage of the charging system is high and the current is large. In order to ensure personal safety, the following regulations should be observed at all times:

1. Only personnel who have received training and sufficient knowledge of charging systems may install charging systems. During installation, always follow the safety precautions at the end of the catalog and local safety regulations.

2. To work inside the charging system, make sure the charging system is not live. The mains input of the charging system must be disconnected.

3. Power distribution cables should be properly routed and protected to avoid accidental contact when operating power supply equipment.

4. It is strictly forbidden to wear a watch on the wrist.

La tension de fonctionnement interne du système de charge est élevée et le courant est important. Afin d'assurer la sécurité personnelle, les règles suivantes doivent être respectées en tout temps:

1. Seul le personnel ayant reçu une formation et une connaissance suffisante des systèmes de recharge peut installer des systèmes de recharge. Lors de l'installation, suivez toujours les précautions de sécurité à la fin du catalogue et les règles de sécurité locales.

2. Pour travailler à l'intérieur du système de charge, assurez-vous que le système de charge n'est pas en direct. L'entrée secteur du système de charge doit être déconnectée.

3. Les câbles de distribution d'énergie devraient être correctement acheminés et protégés pour éviter tout contact accidentel lors du fonctionnement de l'équipement d'alimentation électrique.

4. Il est strictement interdit de porter une montre au poignet.

High voltage

Danger Danger	When the power supply system is running, some components have high voltage, direct contact or indirect contact with these components through non-insulating objects will bring fatal danger. Lorsque le système d'alimentation est en marche, certains composants ont une haute tension, un contact direct ou un contact indirect avec ces composants par des objets non isolants apportera un danger fatal.
Danger Danger	Construction operations on high-voltage lines may cause fire or electric shock accidents. AC cables must be erected and routed in accordance with the local regulations and specifications. Only personnel qualified for high-voltage and alternating current operations can perform various high-voltage operations. Les travaux de Construction sur des lignes à haute tension peuvent causer des accidents d'incendie ou de choc électrique. Les câbles ca doivent être montés et acheminés conformément aux réglementations et aux spécifications locales. Seul le personnel qualifié pour les opérations à haute tension et à courant alternatif peut effectuer diverses opérations à haute tension.
Warning Avertisse-ment	Improper connection of the equipment-grounding conductor is able to result in a risk of electric shock. Check with a qualified electrician or serviceman if you are in doubt as to whether the product is properly grounded. Do not modify the plug provided with the product – if it will not fit the outlet,have a proper outlet installed by a qualified electrician. Une mauvaise connexion du conducteur de mise à la terre de l'équipement peut entraîner un risque de décharge électrique. Vérifiez avec un électricien ou un technicien qualifié si vous avez des doutes quant à savoir si le produit est correctement mis à la terre. Ne modifiez pas la prise fournie avec le produit - si elle ne s'adapte pas à la prise, ayez une prise appropriée installée par un électricien qualifié.

- The installation of AC power equipment must comply with the safety regulations of the relevant industry, and the personnel who install the AC equipment must be qualified for high voltage, alternating current and other operations. (L’installation d’un équipement d’alimentation en courant alternatif doit être conforme aux règles de sécurité de l’industrie concernée, et le personnel qui installe l’équipement en courant alternatif doit être qualifié pour la haute tension, le courant alternatif et d’autres opérations.)

- It is strictly forbidden to wear watches, bracelets, rings and other conductive objects on the wrist during operation. (Il est strictement interdit de porter des montres, des bracelets, des bagues et d’autres objets conducteurs sur le poignet pendant le fonctionnement.)

- When the cabinet is found to be wet or wet, please turn off the power immediately. When operating in a humid environment, moisture should be strictly prevented from entering the equipment. (Quand l’armoire est trouvée mouillée ou mouillée, éteignez SVP l’alimentation immédiatement. En travaillant dans un environnement humide, l’humidité devrait être strictement empêchée d’entrer dans l’équipement.)

- On the switches and buttons that are not allowed to be operated during the installation process, the prohibition of operation signs must be hung up. (Sur les interrupteurs et les boutons qui ne sont pas autorisés à fonctionner pendant le processus d’installation, les panneaux d’interdiction de fonctionnement doivent être raccrochés.)

Tools

Warning	When performing various operations of high voltage and AC power, special tools must be used.
Avertisse-ment	Lors de diverses opérations de haute tension et de courant alternatif, des outils spéciaux doivent être utilisés.

Thunderstorm

Danger	It is strictly prohibited to use high voltage and AC power in thunderstorms.
Danger	Il est strictement interdit d’utiliser la haute tension et le courant alternatif dans les orages.

In a thunderstorm, strong electromagnetic fields are generated in the atmosphere. Therefore, in order to avoid lightning damage to equipment, good grounding of equipment should be done in time. (Dans un orage, de forts champs électromagnétiques sont générés dans l’atmosphère. Par conséquent, afin d’éviter les dommages causés par la foudre aux équipements, une bonne mise à la terre des équipements doit être effectuée à temps.)

Static electricity

Attention	Static electricity generated by the human body can damage electrostatic sensitive components on the circuit board, such as large-scale integrated circuits (IC), etc.. In contact with the equipment, hand holding the plug board, circuit boards, IC chips, etc., in order to prevent human electrostatic damage to sensitive components, you must wear an anti-static hand ring, and the other end of the anti-static hand ring well grounded.
Attention	L’électricité statique générée par le corps humain peut endommager les composants électrostatiques sensibles sur la carte de circuit, tels que les circuits intégrés à grande échelle (IC), etc. En contact avec l’équipement, la main tenant la fiche, les cartes de circuits imprimés, les puces de circuits intégrés, etc., afin d’empêcher les dommages électrostatiques humains aux composants sensibles, vous devez porter un anneau de main antistatique, et l’autre extrémité de l’anneau de main antistatique bien mis à la terre.

Short circuit

Danger	It is strictly forbidden to short-circuit the non-grounding pole to ground during operation. A short circuit will cause equipment burnout and personal safety hazards.
Danger	Il est strictement interdit de court-circuiter le poteau non-terre à la terre pendant le fonctionnement. Un court-circuit entraîne un épuisement de l'équipement et des risques pour la sécurité personnelle.

- The polarity of cables and interface terminals must be strictly checked when conducting live operations. (La polarité des câbles et des terminaux d'interface doit être strictement vérifiée lors des opérations en direct.)
- The power distribution operation space is compact, so please pay attention to select the operation space before any operation. (L'espace d'opération de distribution d'énergie est compact, satisfont ainsi l'attention de choisir l'espace d'opération avant n'importe quelle opération.)
- Operation must use insulated tools. (Le fonctionnement doit utiliser des outils isolés.)
- When operating with electricity, you must pay attention to keeping your hands, wrists, and arms in a tense state, so as to prevent accidents caused by too much movement of the tool or human body when the tool slips. (Lorsque vous utilisez l'électricité, vous devez faire attention à garder vos mains, poignets et bras dans un état tendu, afin d'éviter les accidents causés par un mouvement trop important de l'outil ou du corps humain lorsque l'outil glisse.)

Others

Sharp corners of objects

Warning Warning	When carrying equipment by hand, protective gloves should be worn to prevent being cut by sharp objects. Lorsque vous transportez de l'équipement à la main, des gants de protection doivent être portés pour éviter d'être coupé par des objets tranchants.

Power cable

Attention Attention	Before connecting the cables, verify that the cable labels are correct. Avant de connecter les câbles, vérifiez que les étiquettes des câbles sont correctes.

Signal Cable

Attention Attention	The signal cable should be tied separately from the power cable, and the spacing between the ties should be at least 15mm. Le câble de signal devrait être attaché séparément du câble d'alimentation, et l'espacement entre les traverses devrait être d'au moins 15mm.
Warning Warning	Special tools must be used when carrying out various operations with high voltage and alternating current. Des outils spéciaux doivent être utilisés lors de diverses opérations avec haute tension et courant alternatif.

Warning Warning	Do not install or use this product near flammable, explosive, coarse or combustible materials, chemicals or vapors. Ne pas installer ou utiliser ce produit près de matériaux inflammables, explosifs, grossiers ou combustibles, de produits chimiques ou de vapeurs.

Warning Warning	Before installing or cleaning this product, please turn off the power. Avant d’installer ou de nettoyer ce produit, veuillez éteindre l’alimentation.
Warning Warning	Do not use the device in areas where children are present. Ne pas utiliser l’appareil dans les zones où des enfants sont présents.
Warning Warning	Please use this product in accordance with the specified operating parameters. Veuillez utiliser ce produit selon les paramètres de fonctionnement spécifiés.
Warning Warning	Do not spray water or other liquids directly on the wall-mounted case. Do not spray water or immerse the charging gun in liquid. Please put the rechargeable gun into the protective holder to avoid accidents. Ne vaporisez pas d’eau ou d’autres liquides directement sur le boîtier mural. Ne vaporisez pas d’eau et ne plongez pas le pistolet de charge dans un liquide. Veuillez mettre le pistolet rechargeable dans le support de protection pour éviter les accidents.
Warning Warning	If this product is cracked, worn, broken or otherwise damaged, or does not work properly, stop using it. Si ce produit est fissuré, usé, cassé ou autrement endommagé, ou ne fonctionne pas correctement, arrêtez de l’utiliser.
Warning Warning	If the flexible power cord or EV cable is worn, broken or otherwise damaged or does not work properly, discontinue use. Si le cordon d’alimentation flexible ou le câble électrique est usé, cassé, endommagé ou ne fonctionne pas correctement, cesser l’utilisation.
Warning	Do not attempt to disassemble, repair, tamper with or modify this product. This product is not user-repairable equipment. For repair or modification, please contact your dealer.

⚠ Warning	N’essayez pas de démonter, réparer, altérer ou modifier ce produit. Ce produit n’est pas un équipement réparable par l’utilisateur. Pour réparation ou modification, veuillez contacter votre concessionnaire.
⚠ Warning ⚠ Warning	Please use caution when transporting this product. To prevent damage to the connector or its components, do not expose the connector to force or impact, do not pull, twist, tangle, drag, or step on. Veuillez être prudent lors du transport de ce produit. Pour éviter d’endommager le connecteur ou ses composants, ne pas exposer le connecteur à la force ou à l’impact, ne pas tirer, tordre, enchevêtrer, traîner, ou marcher dessus.
⚠ Warning ⚠ Warning	Do not touch the end of this product with your fingers or sharp metal objects (such as wires, tools or needles). Ne touchez pas l’extrémité de ce produit avec vos doigts ou des objets métalliques tranchants (tels que des fils, des outils ou des aiguilles).
⚠ Warning ⚠ Warning	Do not insert fingers or foreign objects into any part of this product. N’insérez pas de doigts ou de corps étrangers dans aucune partie de ce produit.
⚠ Warning ⚠ Warning	Do not fold or press any part of the product or damage the product with sharp objects. Do not fold or press any part of this product, or damage this product with sharp objects. Ne pas plier ou appuyer sur une partie du produit ou endommager le produit avec des objets pointus. Ne pliez ni n’appuyez sur aucune partie de ce produit, ni n’endommagez ce produit avec des objets pointus.
⚠ Warning ⚠ Warning	Special tools must be used when performing various operations under high-voltage, AC power conditions. Des outils spéciaux doivent être utilisés lors de diverses opérations dans des conditions de courant alternatif à haute tension.

with the safety codes of the relevant industries and strictly observe the relevant equipment precautions and special safety instructions provided by our company.

Security instructions

The internal working voltage of the charging system is high and the current is large. In order to ensure personal safety, the following regulations should be observed at all times:

1. Only personnel who have received training and sufficient knowledge of charging systems may install charging systems. During installation, always follow the safety precautions at the end of the catalog and local safety regulations.

2. To work inside the charging system, make sure the charging system is not live. The mains input of the charging system must be disconnected.

3. Power distribution cables should be properly routed and protected to avoid accidental contact when operating power supply equipment.

4. It is strictly forbidden to wear a watch on the wrist.

High voltage

Danger	When the power supply system is running, some components have high voltage, direct contact or indirect contact with these components through non-insulating objects will bring fatal danger.

Danger	Construction operations on high-voltage lines may cause fire or electric shock accidents. AC cables must be erected and routed in accordance with the local regulations and specifications. Only personnel qualified for high-voltage and alternating current operations can perform various high-voltage operations.

⚠ Warning	Improper connection of the equipment-grounding conductor is able to result in a risk of electric shock. Check with a qualified electrician or serviceman if you are in doubt as to whether the product is properly grounded. Do not modify the plug provided with the product – if it will not fit the outlet,have a proper outlet installed by a qualified electrician.

- The installation of AC power equipment must comply with the safety regulations of the relevant industry, and the personnel who install the AC equipment must be qualified for high voltage, alternating current and other operations.
- It is strictly forbidden to wear watches, bracelets, rings and other conductive objects on the wrist during operation.
- When the cabinet is found to be wet or wet, please turn off the power immediately. When operating in a humid environment, moisture should be strictly prevented from entering the equipment.
- On the switches and buttons that are not allowed to be operated during the installation process, the prohibition of operation signs must be hung up.

Tools

⚠ Warning	When performing various operations of high voltage and AC power, special tools must be used.

Thunderstorm

⚠ Danger	It is strictly prohibited to use high voltage and AC power in thunderstorms.

In a thunderstorm, strong electromagnetic fields are generated in the atmosphere. Therefore, in order to avoid lightning damage to equipment, good grounding of equipment should be done in time.

Static electricity

Attention	Static electricity generated by the human body can damage electrostatic sensitive components on the circuit board, such as large-scale integrated circuits (IC), etc.. In contact with the equipment, hand holding the plug board, circuit boards, IC chips, etc., in order to prevent human electrostatic damage to sensitive components, you must wear an anti-static hand ring, and the other end of the anti-static hand ring well grounded.

Short circuit

Danger	It is strictly forbidden to short-circuit the non-grounding pole to ground during operation. A short circuit will cause equipment burnout and personal safety hazards.

- The polarity of cables and interface terminals must be strictly checked when conducting live operations.
- The power distribution operation space is compact, so please pay attention to select the operation space before any operation.
- Operation must use insulated tools.
- When operating with electricity, you must pay attention to keeping your hands, wrists, and arms in a tense state, so as to prevent accidents caused by too much movement of the tool or human body when the tool slips.

Others

Sharp corners of objects

Warning	When carrying equipment by hand, protective gloves should be worn to prevent being cut by sharp objects.

Power cable

Attention	Before connecting the cables, verify that the cable labels are correct.

Signal Cable

Attention	The signal cable should be tied separately from the power cable, and the spacing between the ties should be at least 15mm.
Warning	Special tools must be used when carrying out various operations with high voltage and alternating current.

Warning	Do not install or use this product near flammable, explosive, coarse or combustible materials, chemicals or vapors.
Warning	Before installing or cleaning this product, please turn off the power.
Warning	Do not use the device in areas where children are present.
Warning	Please use this product in accordance with the specified operating parameters.
Warning	Do not spray water or other liquids directly on the wall-mounted case. Do not spray water or immerse the charging gun in liquid. Please put the rechargeable gun into the protective holder to avoid accidents.
Warning	If this product is cracked, worn, broken or otherwise damaged, or does not work properly, stop using it.
Warning	If the flexible power cord or EV cable is worn, broken or otherwise damaged or does not work properly, discontinue use.
Warning	Do not attempt to disassemble, repair, tamper with or modify this product. This product is not user-repairable equipment. For repair or modification, please contact your dealer.
Warning	Please use caution when transporting this product. To prevent damage to the connector or its components, do not expose the connector to force or impact, do not pull, twist, tangle, drag, or step on.

Warning	Do not touch the end of this product with your fingers or sharp metal objects (such as wires, tools or needles).
Warning	Do not insert fingers or foreign objects into any part of this product.
Warning	Do not fold or press any part of the product or damage the product with sharp objects. Do not fold or press any part of this product, or damage this product with sharp objects.
Warning	Special tools must be used when performing various operations under high-voltage, AC power conditions.

2. Preparation before installation

2.1 Installation site

The environmental conditions listed in the table below need to be considered when selecting charging equipment.

Environmental conditions	Recommended range
Ambient temperature	-30℃～ + 55℃
Altitude	＜2000m
Humidity	5%～95%RH, no condensation inside the product;
Dustiness	≤1mg/m^3
Corrosive substances	No pollutants, such as salt, acid, smoke, etc.
Vibration	≤1.5mm/s
Insects,pests, vermin beasts, termites	None
Mildew	None

Sheet 2 Installation environment confirmation

·Do not install in areas prone to water immersion

·Please avoid the place where cars collide to install

2.2 General construction tools

Serial Number	Type	Name	Application	Picture
1	Wire preparation tools	Electrician's knife	Stripping of insulation sheath	
2	Installation tools	Wire stripping pliers	Stripping of the insulation layer	
3	Installation tools	Crimping pliers	Terminal crimping	
4	Installation tools	Impact Drill	Component card installation	
5	Installation tools	Electric wind-axe machine	Slotting	
6	Installation tools	Cutting machine	Tube cutting	
7	Installation tools	Hot air gun	Heat shrinkage of insulating material	
8	Installation Tools	Hot melt machine	Welding PE water pipe	
9	Installation tools	Allen wrench (full set)	Installation and removal of screws	
10	Installation Tools	Open-end wrenches (full set	Installation and removal of nuts	

11	Installation tools	Angle grinder	Grinding of materials	
12	Installation Tools	Phillips screwdriver (full	Removal and installation of	
13	Measuring Instruments	Laser level	Level measurement	
14	Measuring Instruments	Leveling tape	Level measurement	
15	Measuring Instruments	Multimeter	Measurement of voltage, current, etc.	
16	Measuring instruments	Megohmmeter	Measurement of insulation resistance	
17	Auxiliary apparatus	Insulation floor mat	Placement of disassembled parts	
18	Lifting tools	Manual crane	Lifting of equipment	

Sheet 3 General construction tools

Note: The above tools need to be selected according to the actual situation on site.

2.3 Construction materials

2.3.1 Cable wires

Refer to the following table, according to the different wire diameter, choose the corresponding terminal block.

Wire diameter	Terminal model
8AWG（8.37mm^2）	E10-12
10AWG（5.26mm^2）	VE6012

16AWG（1.31mm²）	VE1508

Sheet 4 Cable diameter cross reference terminal table

Note: Equipment field-wiring terminals shall be marked: "Use Copper Conductors Only" when the terminal is intended only for connections to copper wire.

Note: The torque value of the equipment circuit breaker is 2Nm（17.5lbf-in）.

2.3.2 Network cable

For Ethernet communication, it is recommended to use Super Category 6 shielded twisted pair cable (cat6a) and RJ45 crystal head. The length of network cable should not exceed 75m, more than 75m, the customer needs to customize the construction plan according to the site conditions.

2.3.3 Other material

Auxiliary materials such as heat-shrinkable tubes and insulating tapes required for making cables.

2.4 Installer requirements

(1) Entering the construction site should comply with the construction site safety management regulations.

(2) Entering the construction site, you must correctly wear a helmet (tie the jaw belt, helmet intact), do not wear wide clothing, slippers and other unsafe attire, alcohol is strictly prohibited to work, smoking in the construction site is strictly prohibited.

(3) If the site is dusty or spray paint work, you must wear a protective mask.

(4) Try to stay away from various machinery and equipment, electrical lines to prevent mechanical and electrical injuries.

(5) the use of mobile power tools must master its use of skills and precautions, to try to wear insulated shoes, with insulated gloves, metal outer

(6) The site temporary electricity, the electrical box to keep intact, damage to the electrical components must be replaced in a timely manner.

(7) Do not plug the wire directly into the socket.

(8) Try to avoid working with electricity.

(9) When entering the pit, roof and other sides or various holes, you should concentrate on preventing falling from high places.

(10) Pay attention to the condition of the ground environment such as iron nails and steel bars to prevent other injuries such as sticking, touching, hanging and falling.

(11) Site construction protection facilities, safety signs, warning signs, etc. can not be removed without authorization.

(12) Construction equipment to strengthen the maintenance of the site, to keep intact.

2.5 Construction drawing confirmation

When the installers arrive at the site, they first check the drawings of the installation location of the equipment and check to make sure that the cables of each equipment meet the requirements.

2.6 Equipment spacing requirements

To ensure safe and reliable operation of equipment, ventilation and maintenance requirements, sufficient installation space and installation height should be reserved.

2.6.1 Installation space requirements

Requirements 550 x 720 mm, space calculation as follows .

• The front side of the reserved distance ≥ 400mm (to ensure the normal opening and closing of the front door and the smooth operation)

• The lower side of the reserved distance ≥ 200mm (to ensure that the incoming and outgoing lines are smooth)

• The right side of the reserved distance ≥ 500mm (to ensure that the gun seat inserted into the gun smoothly)

2.6.2 Installation height requirements

Recommended to install according to the height marked in the figure below, the product height from the ground 800mm. example Figure 1

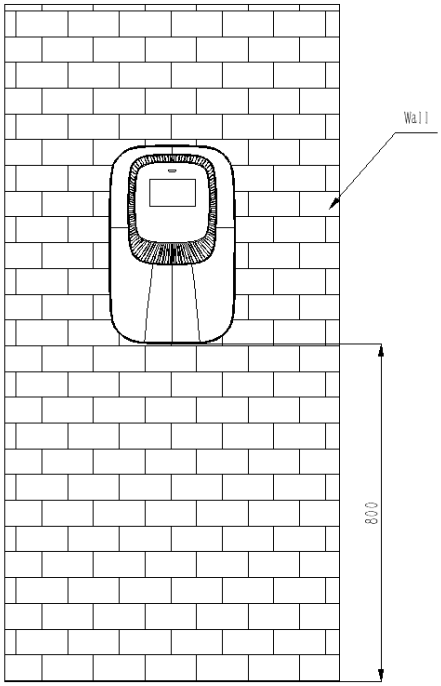

Figure 1 Installation height requirement

2.6.3 Car parking distance requirement

When the charging post is installed in the middle of a parking space or back-to-back parking spaces, it is recommended to leave a space of 800mm between the car wheel block and the charging post to facilitate the use of the charging post, as illustrated in Figure 2:：

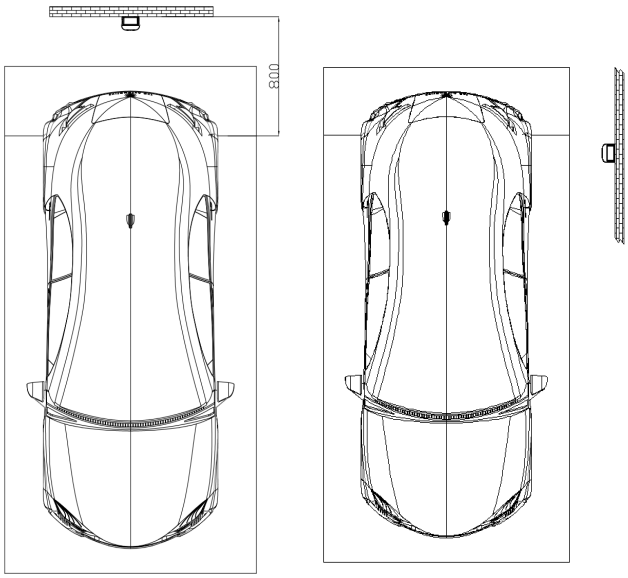

Figure 2 Installation distance requirement

2.7 Power cable recommendations

AC003P AC chargers are recommended to use cables with 400V or higher voltage rating, and the cables should have at least 90°C temperature resistance level. The installer should confirm whether shielding is required according to local laws or terms and conditions, and if shielding is available, both ends of the shield should be connected to the PE wire.

The power distribution input wire diameter of the charging pile is recommended to be no less than the following recommended values. If this wire diameter is not in accordance with laws and regulations, please refer to local laws and regulations requirements.

Phase sequence/color	L1 Brown	L2 Black	PE yellow-green	Noted
AC003PT17 two-phase 32A	8AWG（8.37mm^2）	8AWG（8.37mm^2）	10AWG（5.26mm^2）	US
AC003PT19 two-phase 40A	8AWG（8.37mm^2）	8AWG（8.37mm^2）	10AWG（5.26mm^2）	US
AC003PT111two-phase 48A	8AWG（8.37mm^2）	8AWG（8.37mm^2）	10AWG（5.26mm^2）	US

Sheet 5 Wire diameter selection table

2.8 Current & distribution capacity requirements

Please confirm the information requirements of the distribution network in accordance with the following table and select the circuit breaker according to the recommended selection requirements.

Note: When installing the charging pile, the charging pile power supply line should be equipped with an independent circuit breaker or leakage protection device, and B type leakage protection device is recommended.

Charger Specifications	Distribution Grid Voltage	Wiring Type	Grid capacity	Rated current	Circuit Breaker Selection	Noted
AC003PT17 two-phase 32A	240VAC,50/60Hz	L1+L2+PE	⩾8.75kVA	40A	Ue=400V,⩾40A,Thermomagnetic，Icu⩾Ics⩾40kA,2P	US
AC003PT19 two-phase 40A	240VAC,50/60Hz	L1+L2+PE	⩾11.25kVA	50A	Ue=400V,⩾50A,Thermomagnetic，Icu⩾Ics⩾40kA,2P	US
AC003PT111two-phase 48A	240VAC,50/60Hz	L1+L2+PE	⩾13.75kVA	60A	Ue=400V,⩾60A,Thermomagnetic，Icu⩾Ics⩾40kA,2P	US

Sheet 6　Distribution network requirements and circuit breaker selection

2.9 Requirements for fixed foundation

When the backplane is used for wall mounting, it should be installed on solid brick, concrete or its strength equivalent with a certain flatness of the installation surface. The load-bearing capacity should be more than 100 kg/m^2. The product should not be installed on sandy walls, plasterboard, marble, glass panels or steel plates.

2.10 Grounding/insulation resistance requirements

(1) Check the civil grounding resistance test report to ensure that the resistance value of the grounding network made on site needs to be ≤ 4Ω.

(2) Check the civil insulation resistance test report to ensure that the cable insulation resistance resistance value ≥ 10MΩ.

⚠Noted The above requirements are the minimum requirements for this equipment, and the specific standards are subject to local laws and regulations.

3. Installation Steps

3.1 Unpacking and unpacking inspection

3.1.1 Equipment packing list

Name	Packaging	Configuration	Random documents	Accessory List
Equipment body	Cardboard box	Standard	- Certificate of Conformity - Factory inspection report - Installation manual (electronic version)	RFID card (optional RFID function required) Expansion plug *3 Expansion screw ST4.8X40mm *4 Screw M4×12mm *4 (currently standard, for column installation)

Sheet 7 Equipment packing list

Attention:Moving, Transporting, and Storage Instructions

(1) If improper moving or storage of the device is able to result in damage to the product that couloresult in a risk of fire or electric shock during subseguent use, the instructions shall describe the propermoving and storage procedure, and shall be preceded by the heading "MOVING AND STORAGEINSTRUCTIONS" or the equivalent.

(2)

3.1.2 Unpacking and inspection

(1) Check the packing list number and equipment quantity.

(2) Check the equipment nameplate information.

(3) Check the completeness of the random documents.

(4) Check whether the spare parts and accessories are complete.

(5) Check the factory inspection report and certificate of conformity.

(6) Check whether the equipment appearance is good, whether there is deformation, bump, stain, etc.

3.1.3 Unpacking notes

(1) The installer shall unpack the equipment in the presence of the owner and fill in the unpacking record in detail.

(2) After unpacking and checking, the owner's representative should be asked to confirm the signature on the equipment unpacking record sheet.

(3) Equipment unpacking and acceptance process found problems, in addition to making records, waiting for the owner to negotiate with the supplier.

3.1.4 Product parts introduction

The parts of the product facade are shown in Figure 3, and the internal parts are shown in Figure 4.

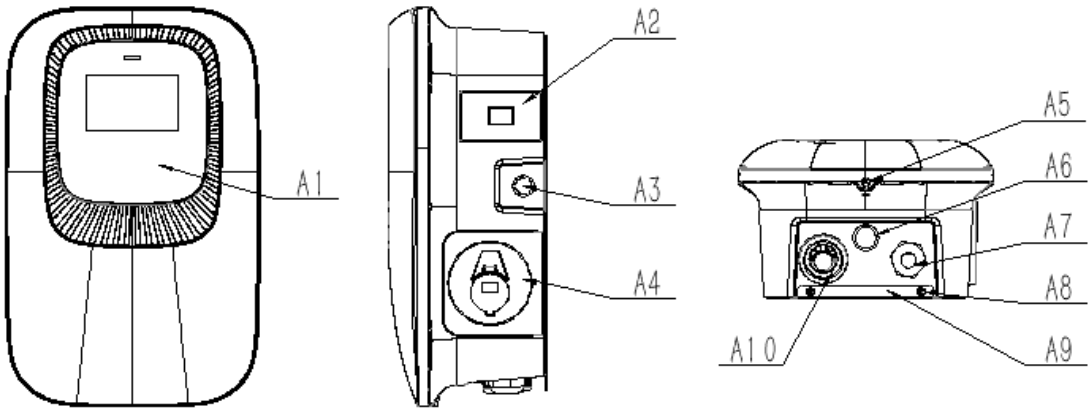

Figure 3 Product component diagram

A1	Screen Tempered Glass	A2	Tempered Glass For Electricity Meter	A3	Emergency Stop Switch	A4	Socket

A5	M4 countersunk Head Security Screws	A6	Network Cable Interface	A7	Glan Head	A8	M4 Anti-theft Combination screw
A9	Wall Mount Bracket	A10	Bellows Connector				

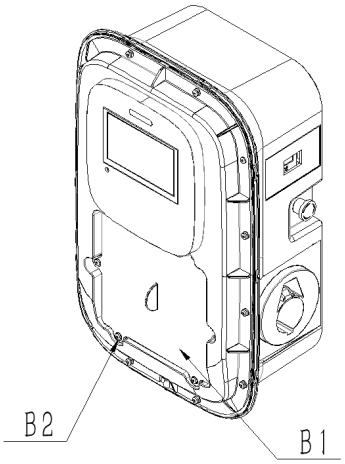

B1	Maintenance Cover	B2	M4 Anti-theft Combination Screws			B1	Maintenance Cover

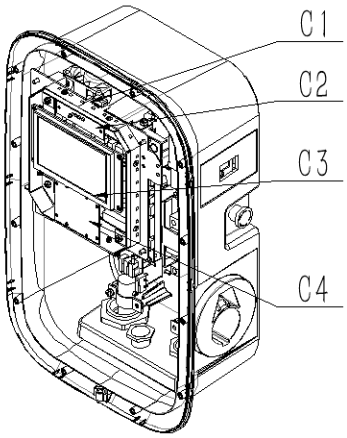

C1	Ambient Light	C2	Indicator Light	C3	Screen	C4	Card Reader

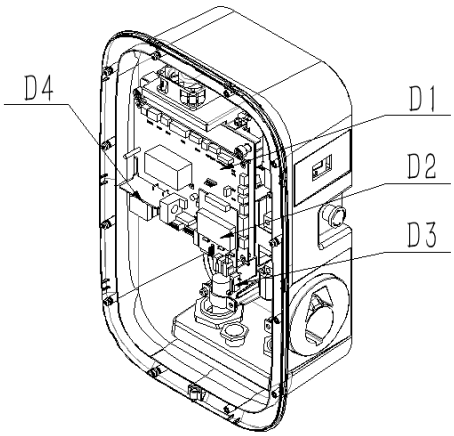

D1	Main Board	D2	OCPP	D3	Access Control Switch	D4	Lightning Protection Board

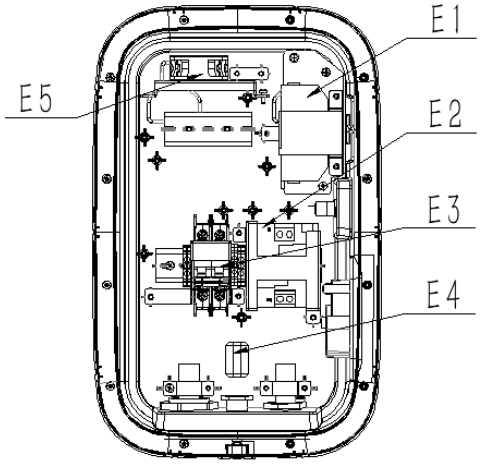

E1	Meters	E2	AC Contactor	E3	Breaker	E4	Magnetic Rings
E5	Fan						

Figure 4 Internal components

3.2 Equipment installation

3.2.1 Installation size

Equipment installation size: 196 mm × 350 mm × 140 mm, the external dimensions are shown in Figure 5.

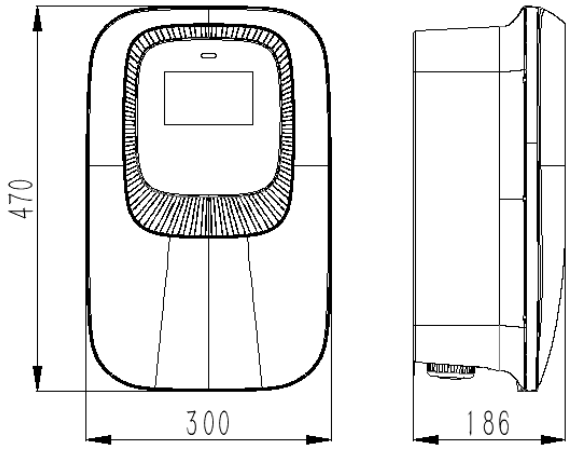

Figure 5 Schematic diagram of product size

3.2.2 Unpacking

Open the outer box and remove the screw accessory kit, the charging post body, the opening template and the wall mounting bracket.

Attention:

The device is not to be lifted or carried by either the flexible cord or the EV cable.

If improper moving or storage of the device is able to result in damage to the product that could result in a risk of fire or electric shock during subsequent use.

3.2.3 Installation

Attention: It is necessary to strictly follow the installation steps to install in order to ensure the protection level of final use.

(1) Use ruler and marker to mark the wall according to the size below.

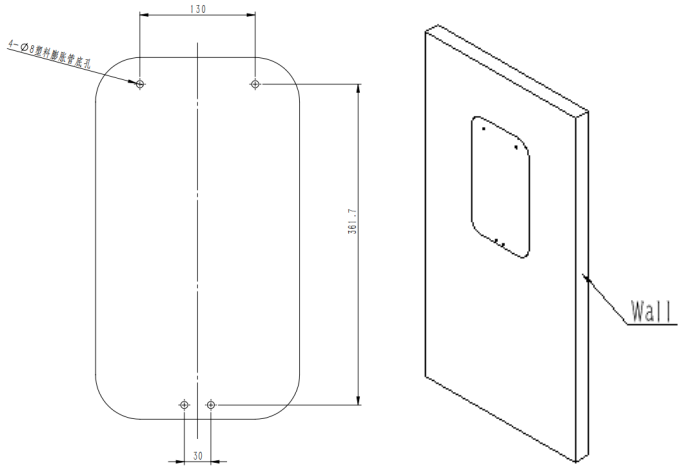

Figure 6 Schematic diagram of leveling and opening template

(2) Mark the four mounting holes below with a marker, and then drill four holes with a φ8 drill bit (hole depth 5 cm).

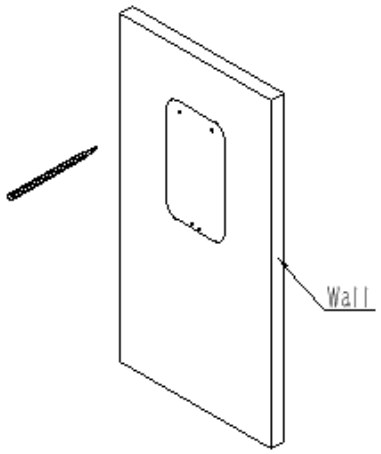

Figure 7 Diagram of mounting hole positioning

(3) Insert four 8mm diameter expansion plugs into the mounting holes below.

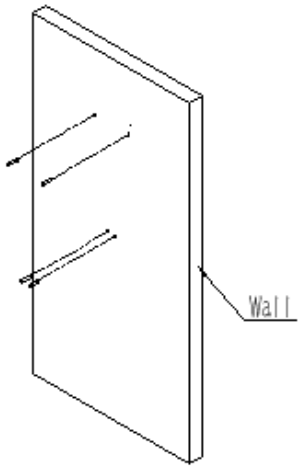

Figure 8 Diagram of placing expansion plug

(4) 7Insert two ST4.8×40mm screws into the mounting holes below, making sure the screws stick out of the wall 11mm from the head.

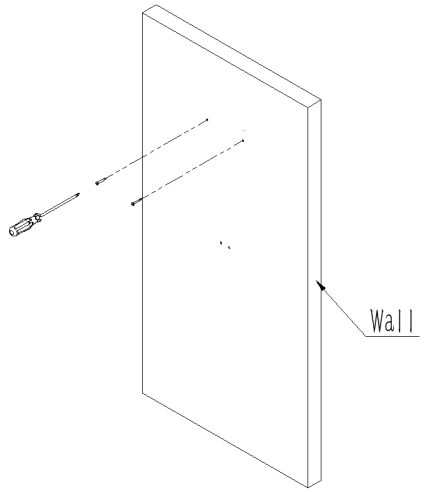

Figure 9 Screw mounting schematic

(5) Secure the wall bracket to the charging post using M4 anti-theft screws.

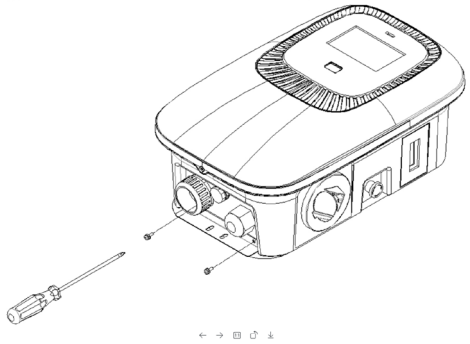

Figure 10 Wall bracket mounting schematic

(6) Use two ST4.8 x 40mm screws through the two holes on the wall bracket to fix with the remaining 2 expansion plugs on the wall.

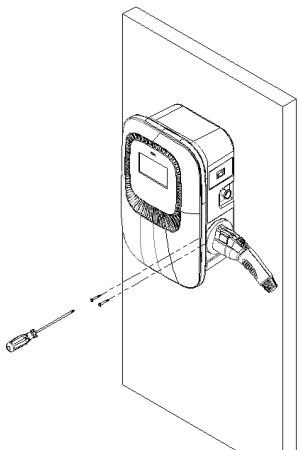

Figure 11 Charger installation schematic

3.2.4 Connect Ethernet cable

The charging post supports Ethernet connection, when using Ethernet cable connection, insert the Ethernet RJ45 plug into the RJ45 connector (H) at the bottom of the charging post.

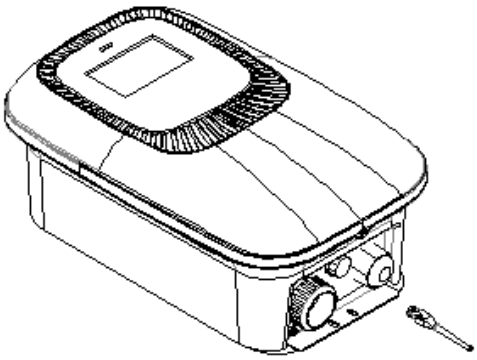

Figure 12 Schematic diagram of connecting the Ethernet cable

3.2.5 Wiring

Attention！The AC input cable is routed from the customer's distribution switch and is only connected to the output terminal of the customer's switch when it is finally ready to be energized.

Step 1: Remove the decorative cover using the cocking tab.

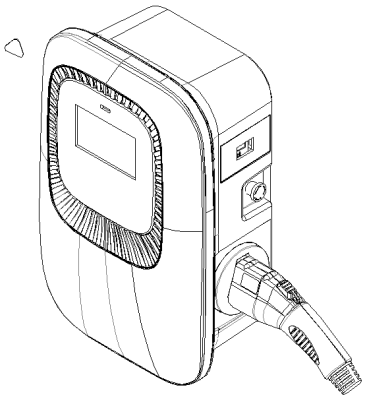

Figure 13 Remove the junction box cover

Step 2: Remove the maintenance cover (screw*6) using the inner plummer with hole screwdriver.

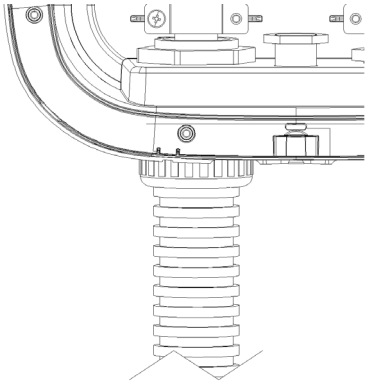

Figure 14 Remove maintenance cover

Step 3: Customer provides1 1/4"bellows and fixes them to the bellows joint. The length of the bellows shall be determined according to the site conditions. It is recommended to use nylon material for bellows, and the flame retardant grade UL94-V2.

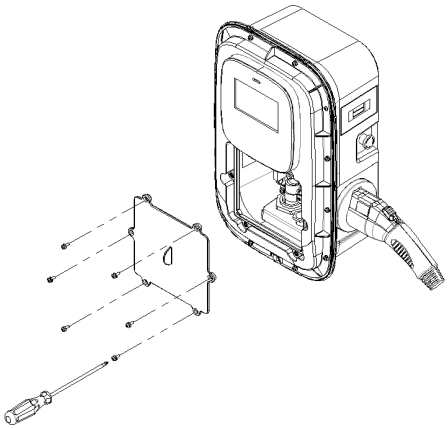

Figure 15 Bellows fixing diagram

Step 4: Thread the lead through the bellows (if any) and the connector. Then connect it to the corresponding wiring pair according to the L1/L2/L3/N/PE identifier, and tighten it.

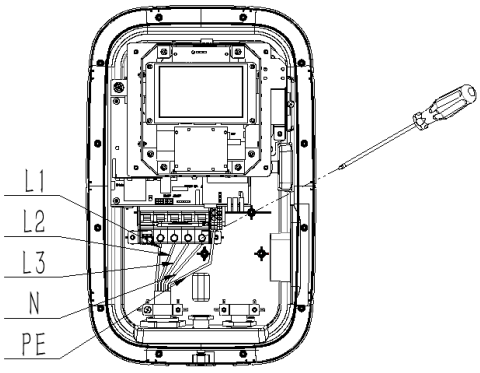

Figure 16 Wiring schematic

Step 5：**ATTENTION！** Check that the wiring is secure, the cable is not broken, damaged or scratched, and no metal debris remains in the junction box.

Step 6: Fix the maintenance cover on the pile and tighten it with 6 screws.

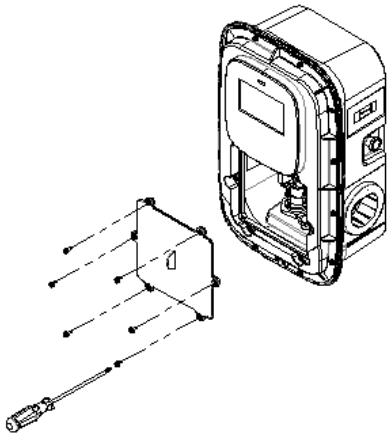

Figure 17 Installation of tightened junction box

Note: If the bellows are not used, the cable must be locked with a g ad to meet the waterproof requirements. The gran head is M40 a thread length does not exceed 15mm. The cable diameter ranges from 19 mm to 21mm.

Warning:

Must be performed in accordance with the specifications and the correct operating procedures, incorrect implementation may lead to personal injury or death, etc.

4. Post-Installation Inspection

4.1 Installation and wiring inspection

4.1.1 Equipment and equipment fixation inspection

(1) The appearance of the charging pile is neat and tidy, no bumping damage, and the position is in line with the hanging frame and fixed firmly without loosening.

(2) The orientation of the equipment meets the installation standards.

(3) There is no leakage of equipment installation accessories.

(4) Level meter measurement equipment book evaluation in line with the requirements.

4.1.2 Cable laying and connection inspection

(1) Check whether the cable insulation sheath is scratched and damaged.

(2) Check whether the power cable terminal is compliant and wired securely.

(3) Check that the communication cable terminals are correct and free from looseness.

(4) Check whether there is a hanging cable label.

(5) Check whether the bending radius of the cable meets the requirements.

(6) Check whether the electrical grounding is reliable.

4.2 Inspection before power on

After ensuring the above operations such as stable charging post installation and reliable wire wiring, the charging post can be powered on.

4.3 Power on

Turn on the main switch of the charging post external AC power. The indicator blue breathing light is on.

Indicator status	Definition
Green light is always on	Standby
Blue breathing light	Charging in progress
Blue light is always on	Charging complete
Red light is always on	Fault state

Sheet 8 Comparison table of charging pile status indicators

5.Charging/Stop Charging

5.1 Plug gun direct charging (need to set up)

Firstly, after taking the gun out of the gun holder and connecting the charging gun to the car, you can observe that the green light is always on, which is the standby mode. Swipe the card and click on the screen for fast charging, and it is now in charging mode; at this time, the light will turn into a blue breathing state; when the charging is over, the light will turn into a blue steady state, draw the gun after charging and put the gun back into the charging pile . (If the light turns red, it means there is a fault that needs to be checked)

5.2 Default Setting

1.Admin Login

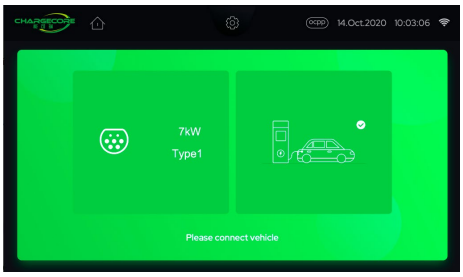

Figure 18 Home page "Settings"

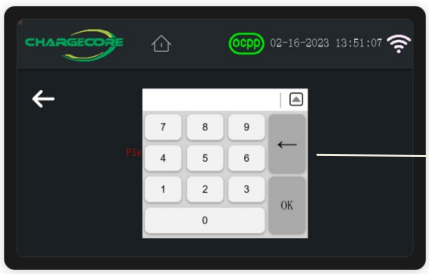

Figure 19 Password input

Description: How to change the password?

·Log in to the administrator interface, select "Basic Settings" and click the "Password" button

·Enter the six-digit old password, new password, and confirm the new password (Figure 21), click "Confirm" and the modification is successful

Figure 20 Basic Setting Diagram

Figure 21 Change Password

2. Network Configuration

-After entering the management interface, select "Network"

-Support WIFI, 4G, Ethernet

-The signal icon in the upper right corner of the screen is displayed as the corresponding networking mode (as shown in Figure 22), that is, the network connection is successful

Figure 22 Network configuration success signal icon

WIFI Set up

Step1：Select WIFI > Click Refresh

Step2：Enter WIFI password > Next step to confirm：

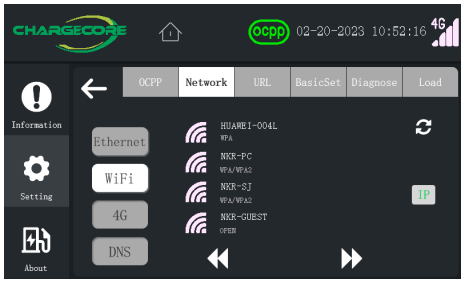

Figure 23 Select WIFI

Figure 24 Enter WIFI password

4G set up

Step1：Select 4G > Set corresponding parameters

Step2：Confirm to switch to 4G

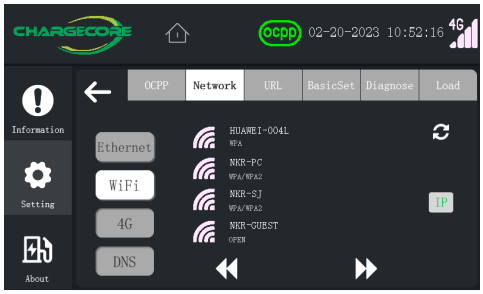

Figure 25 Select 4G network

Figure 26 Confirm switch network

Ethernet set up

Select Ethernet > Tick Obtain Automatically/Set IP Address Manually > Confirm Connection

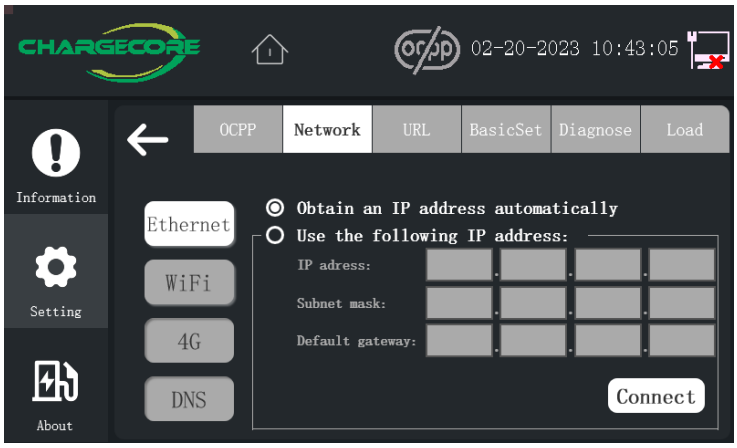

Figure 27 Select Ethernet

3.OCPP Platform Connection

After the charging pile network configuration is completed, it will automatically connect to the OCPP platform within 60s. After the connection is successful, the OCPP icon on the screen will light up (as shown in Figure 28）

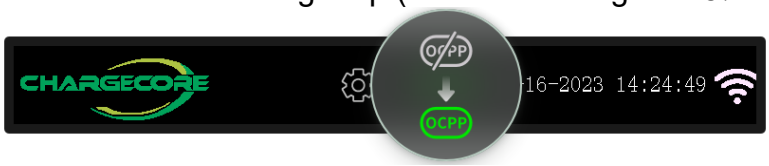

Figure 28 OCPP connection into

5.2 Charging Process

1. Take out the plug gun, insert the charging gun into the charging port of the vehicle, and the screen icon changes at this time (as shown in Figure 29 and Figure 30)

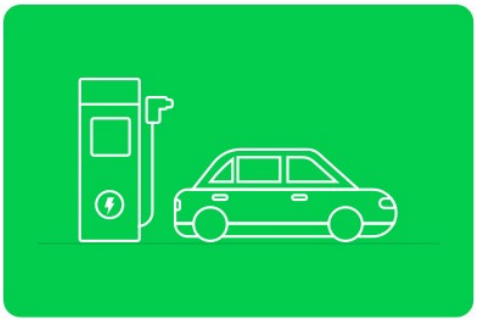

Figure 29 Unplugged state

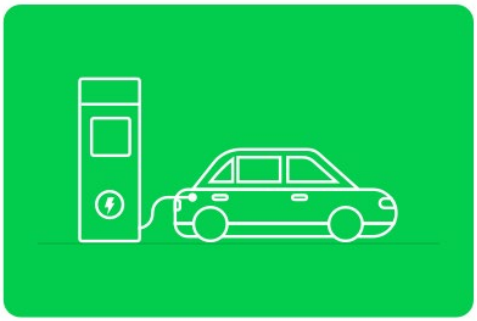

Figure 30 The gun is not inserted

2. After inserting the gun, click the "start" button and select the payment method.

Support RFID activation, APP scanning code activation, POS credit card activation (optional)

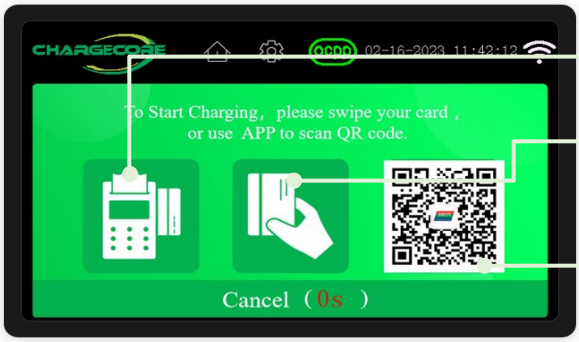

POS credit card (optional)

RFID

APP scan code (as shown in Figure 32)

Figure 31 payment method selection

interface

* App home page click“⛶”button to scan the QR code (Note: For details on how to use other functions of the APP, please refer to the APP instruction manual)

Figure 32 Chargecore interface

3 Select charging mode

Support SOC mode, time mode, power mode, fast charging mode.

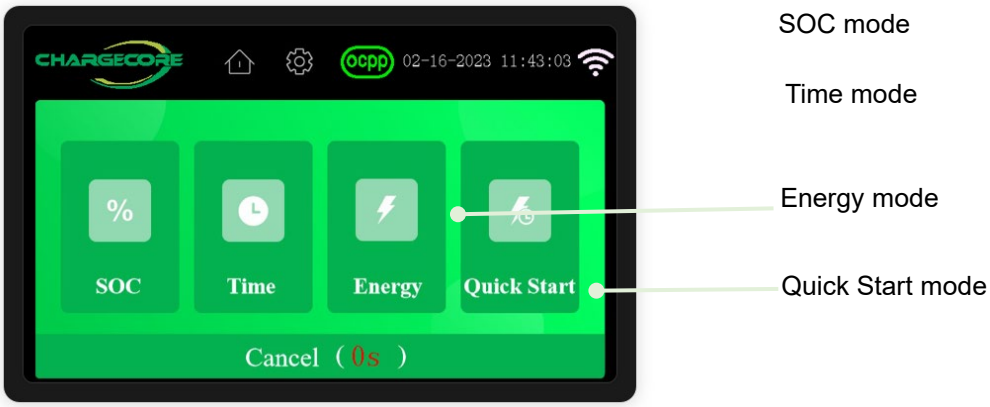

Figure 33 Charging mode selection - screen operation interface

* After the app scans the QR code, it enters the charging mode and payment method selection (note: please refer to the app instruction for detailed app usage)

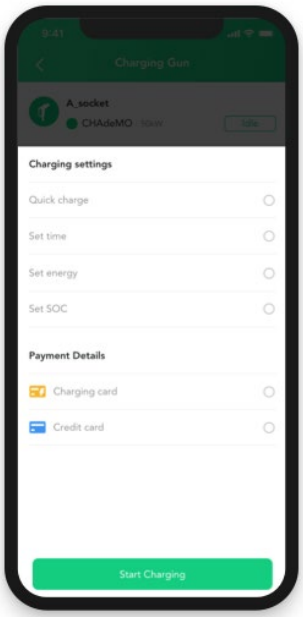

Figure 34 Charging mode selection - App operation interface

- Click to select SOC mode/time mode/power mode

  a. Enter the percentage of power required for this vehicle (%)/the required charging time for this time (min)/the required power for this charging (kwh) (as shown in Figure 35)

  b. Click to start charging

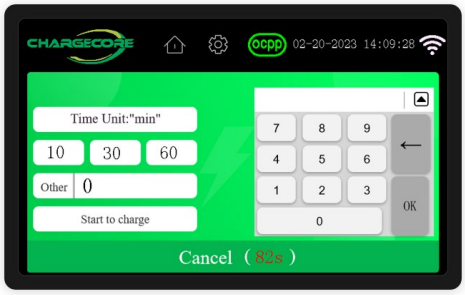

Figure 35 Time mode

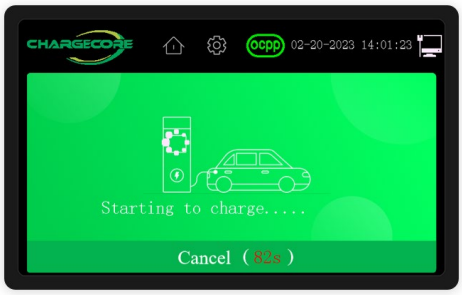

Figure 36 Initiating charging

- Click to select the fast charging mode to start charging immediately

4 Charging

·View vehicle charging details in real time (as shown in Figure 37)

·Charging will end automatically after it is fully charged / click the "STOP" button to end charging in advance

(Note: When using the App to charge, you need to operate the "STOP" button on the App)

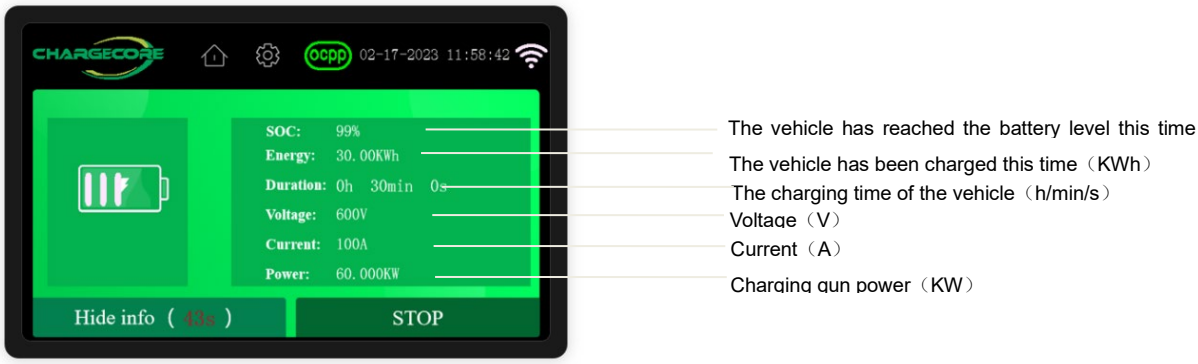

Figure 37 Charging interface

5. Pay for the order and view the order details.

When choosing an RFID card, you need to swipe the card again to pay (as shown in Figure 38)

When choosing an app, the payment will be automatically completed in the credit card/debit card bound to the app in the app

No need to operate when selecting the POS machine, the payment will be completed automatically after the charging stops

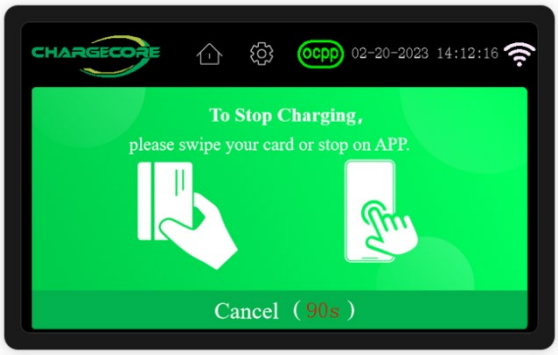

Figure 38 RFID card settlement interface

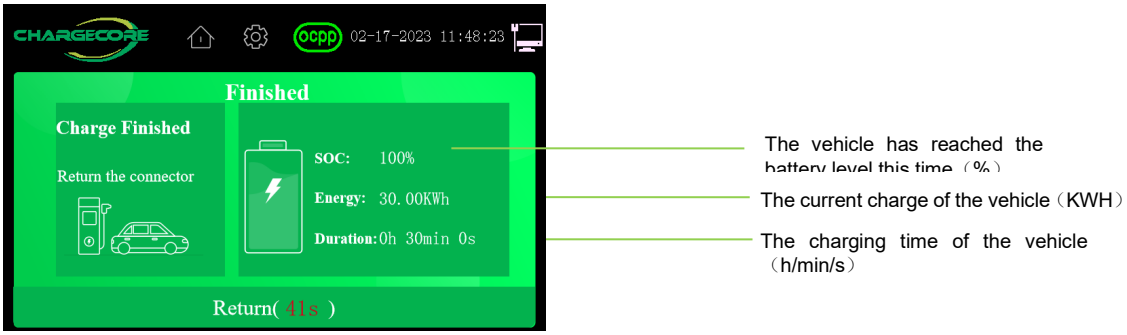

6. Emergency Operation

6.1 Emergency stop function

The emergency stop alarm is not part of the normal charging operation, only when there is an abnormality or misoperation, refer to this part. Do not use the "emergency stop button" for normal shutdown.

Emergency stop： Only in case of emergency, pressing the side "emergency stop button" system will cut off the output power. It can be reset by pressing the emergency stop button again.

6.2 Emergency stop button position

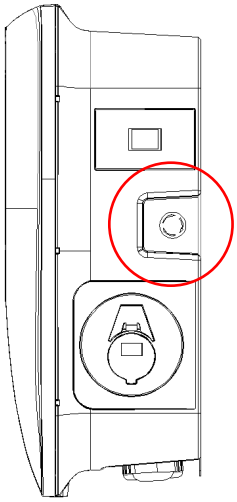

Figure 39 Emergency stop button

7. Completion Information

No.	Documentation name	Page	Document necessity
1	unpacking record sheet	1	√
2	Pre-Installation Checklist	1	√

Appendix 1

Unpacking record sheet						
Dealer name				Date		
No.	Item name	Goods	Qty	Certificate number	Condition	Remark
1						
2						
3						
4						
5						
6						
7						
8						
9						
10						
Unpacking conclusion						
signature column	Installation unit			Owner unit		

Appendix 2

Pre-Installation Checklist				
Project name:				
Civil construction unit:		Equipment installation unit:		
Sub-project	No.	Main acceptance items	Acceptance record	Treatment measures
Installation plan	1	Whether the on-site equipment installation conforms to the construction plan design drawings		
Distribution box circuit breaker	1	Meet equipment installation requirements (40A)		
Cable type	1	Refer to Table 5 in Chapter 2.7 to select the cable diameter and quantity according to the actual situation		
	2	Network cable cat6a (for Ethernet communication)		
wall mount foundation	1	Dimensions meet the requirements		
	2	The foundation bolts meet the requirements of chapter 2.9 in the installation manual		
Maintenance access	1	The inspection channel meets the equipment spacing requirements in Section 2.6		
in conclusion：				
Note: (1) Fill in "√" or "×" in the acceptance record according to the on-site situation; (2) Fill in "qualified" in the conclusion according to the on-site situation"needs rectification"				
Signature：_____ Year Month Date MMDDYY				

Appendix 3

Component Name	Toxic and hazardous substances or elements					
	Plumbum	Mercury	Cadmium	Hexavalent Chromium	Polybrominated Biphenyls	Polybrominated Diphenyl Ethers
	Pb	Hg	Cd	Cr6+	PBB	PBDE
PCB	○	○	○	○	○	○
Rubber Parts	○	○	○	○	○	○
Cable	○	○	○	○	○	○
Shell	○	○	○	○	○	○
Sheet Metal Parts	○	○	○	○	○	○

○：Indicates that the content of the toxic and hazardous substance in all homogeneous materials of the part is below the limit requirement stipulated in SJ/T-11363-2006

×：Indicates that the content of the toxic and hazardous substance in at least one homogeneous material of the part exceeds the limit requirement stipulated in SJ/T11363-2006

Note on the Environmental protection period: The environmental protection period of this product (marked on the product body) refers to the period from the date of production when the toxic and harmful substances or elements contained in this product will not cause serious impact on the environment, human life and property under normal conditions of use and in compliance with the safety precautions of this product.

Scope of application:Integrated AC charger.