BRAT

QUICK START GUIDE

VOLCON BRAT

Whether you want to explore the city, beach, or trails, either on road or off, the Brat empowers your adventure. The Brat's powerful electric motor lets you go further with less effort and enjoy the journey more. Full suspension front and rear along with wider tires creates a smooth and stable ride. If you are looking for alternate transportation or just want to cruise with friends, the Volcon Brat is the bike that does it all.

MODEL FEATURES

- Bluetooth Compatible to support app based vehicle controls
- USB Charger
- "Tank" Storage Compartment
- Headlight/Taillight
- Half Grip Throttle
- Chain Drive
- Pedal Assist
- 4" LED Color Display

GETTING FAMILIAR WITH YOUR BRAT

1. Display
2. Throttle
3. “Tank” Storage compartment
4. Headlight
5. Electronic Speed Controller (ESC)
6. Battery
7. Pedal
8. Crank set
9. Kickstand
10. Swingarm
11. Motor
12. Taillight

BRAT CONTROLS AND DISPLAY

The Brat's controls are laid out similarly to a standard bicycle, with the front brake lever on the left and the rear brake lever on the right. In addition, there is the D-pad, located on the left side of the handlebars for turning on the bike and cycling through the ride modes, the throttle to control the speed of the electric motor, and the LED display that provides important information about the status of your bike. Be sure to familiarize yourself with all of these before your first ride.

Always obey all local and federal traffic and safety laws. Always wear personal protective gear and a helmet.

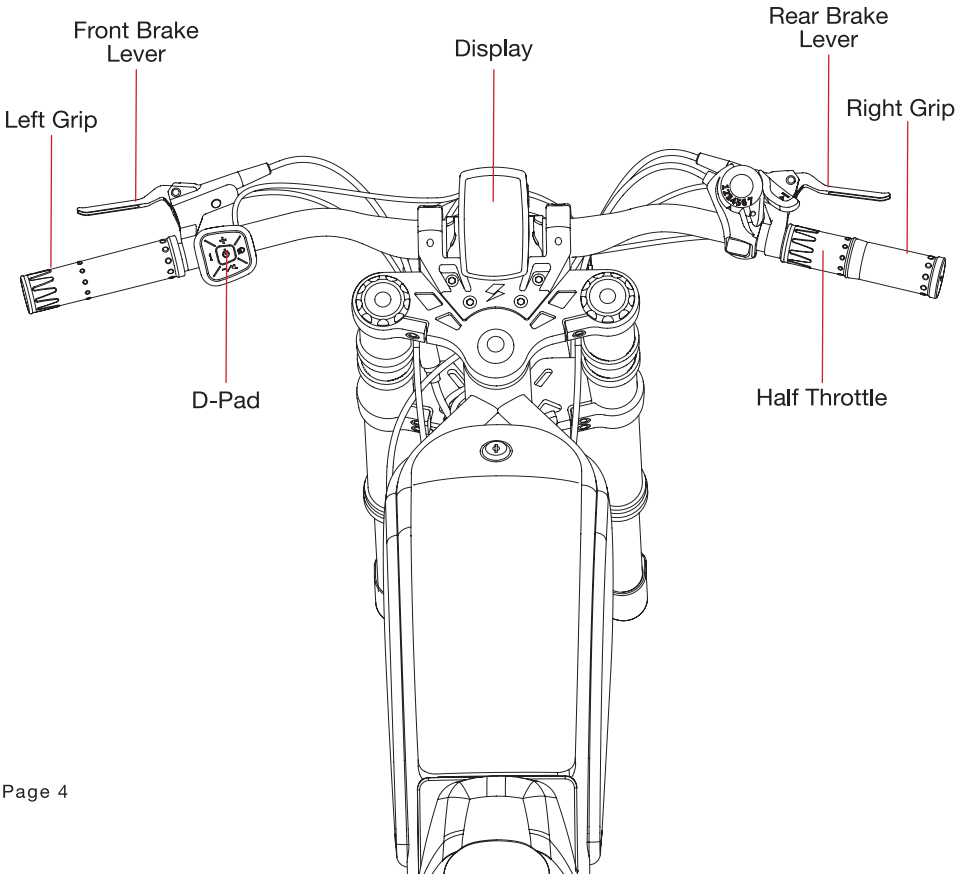

UNDERSTANDING THE DISPLAY

The Brat's display gives vital information about the status and performance of your bike. The D-Pad gives the rider access to all the functions of the Brat's display without ever needing to take their hand off the handlebar.

NOTE: Refer to your owner's manual for instructions on how to lock the display.

BATTERY AND CHARGER

CHARGER

The charger is a switched-mode power supply so it will work with 100v - 240v.

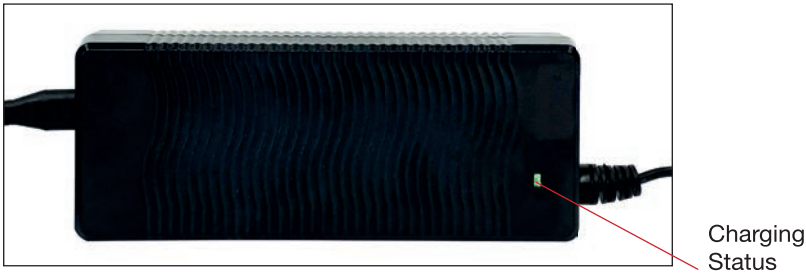

WHAT COMES IN THE BOX

If you have your Brat delivered directly to you it will come partially assembled. Below is a list of the parts that will need to be assembled as well as the tools and hardware that are included.

PARTS

1 x Handlebar set
2 x Pedals (one right, one left)
1 x Headlight
1 x Front Fender
1 x Rear Fender
1 x Kickstand
1 x Lithium Ion Battery
2 x Battery Lock Keys
2 x Storage Compartment Keys
1 x Charger

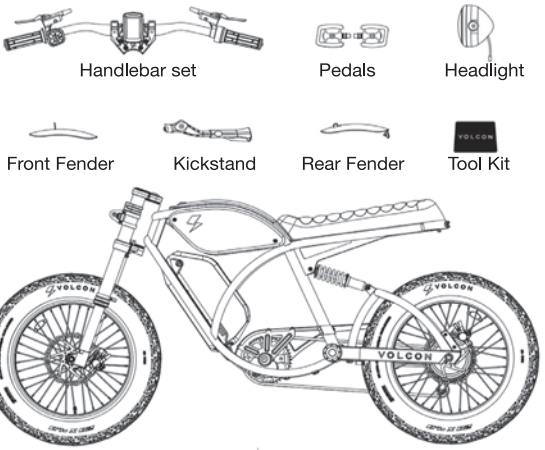

FASTENERS

4 x 5mm Allen bolts (Handlebars)
2 x 14mm Hex Head bolts (Headlight) (installed in the headlight)
3 x 3mm Allen bolts (Fenders)
1 x 8mm Allen bolts (kickstand)

TOOLS

2.5mm Allen Wrench
3mm Allen Wrench
4mm Allen Wrench
5mm Allen Wrench
8mm Allen Wrench
14mm/15mm Box Wrench
Phillips Head Screwdriver

IF YOUR VOLCON BRAT CAME ASSEMBLED SKIP TO PAGE 14

ASSEMBLY INSTRUCTIONS

Follow these step-by-step instructions for the complete assembly of your new Volcon Brat. Make sure assembly is complete and the battery is fully charged before your first ride!

- The first step is to leave your Brat in the base of the box for added support. This will allow you to install your kickstand first before fully removing your Brat from the box.
- Next remove the small box under the bike that contains the parts and tools needed to fully assemble your Brat. Open the box and remove all parts and the small tool kit that comes with your Brat.
- Follow Kickstand installation steps at the bottom of this page.
- Once the kickstand is installed, you can then fully remove the Brat from the box and lean it on the kickstand.
- Next make sure to remove all the protective foam and zip ties from all around the Brat before you continue on to the rest of the assembly process.

KICKSTAND INSTALLATION

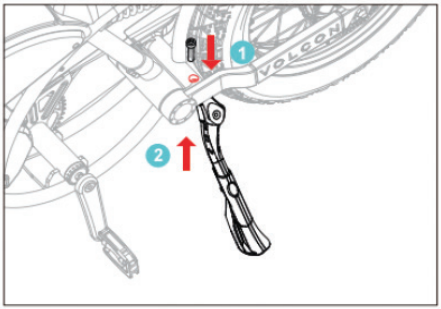

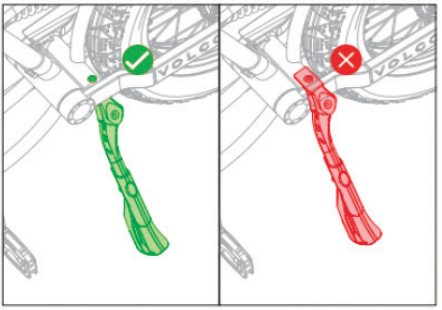

1. Find the kickstand bolt hole below the rear shock on the left side of the bike (non-chain side) the hole will have a small rubber plug, remove that plug.
2. Install the kickstand into the slot on the bottom of the swingarm.

- Then insert the 8mm Allen bolt into the screw hole from top to bottom.
- Use the 8mm Allen wrench to tighten the kickstand bolt.
- Reinstall the rubber plug over the kickstand bolt hole.
  Suggested Torque:
  10 Nm or 7.37 ft-lb

HANDLEBAR INSTALLATION

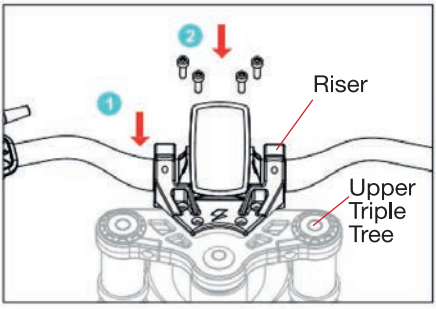

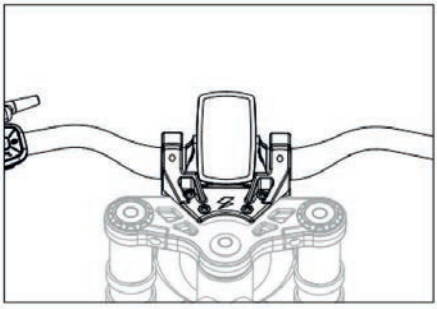

1. First attach the handlebar by puting the riser assembly into the mounting slot of the upper triple tree.

2. Then insert 4 x 5mm Allen bolts into the holes from the top.

- Use the 5mm Allen wrench to tighten the screws.
  Suggested Torque:
  10 Nm or 7.37 ft-lb

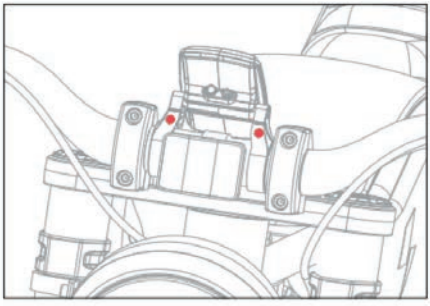

- After installing the handlebars, loosen the display bracket screws using the 2.5 mm Allen wrench. Adjust the position of the display to the rider's preference then tighten the screws on both sides.

FRONT AND REAR FENDER INSTALLATION

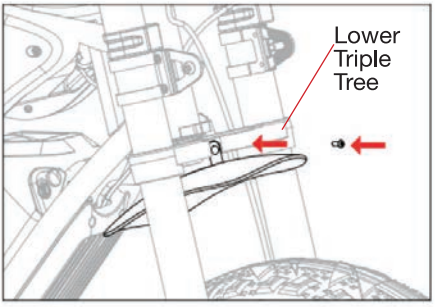

- Secure front fender bracket, with a 3mm screw to the lower triple tree, in the front of the lower triple tree.

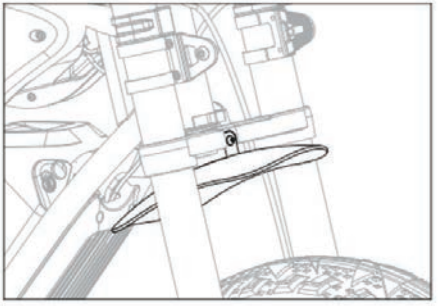

- Use the 3mm Allen wrench to tighten the screw.
  Suggested Torque:
  2 Nm or 1.47 ft-lb

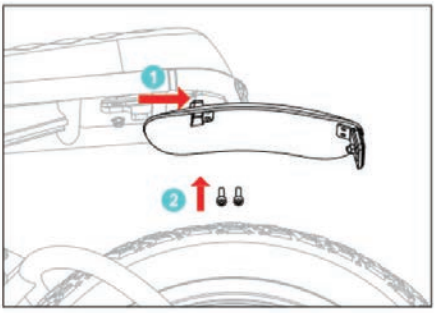

1. Locate the mounting site under the seat to the rear. Push the rear fender into the slot and pull the fender to the rear of the bike.
2. Align the holes and install 2 x 3mm bolts.

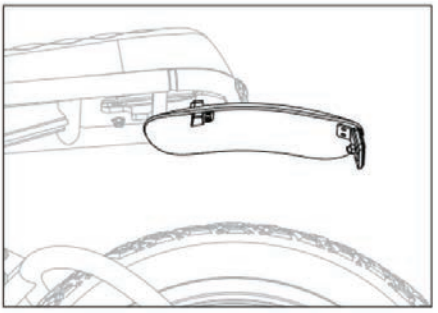

- Use the 3mm allen wrench to tighten the screws.
  Suggested Torque:
  2 Nm or 1.47 ft-lb

HEADLIGHT AND PEDAL INSTALLATION

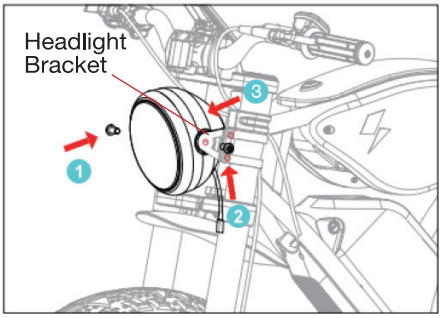

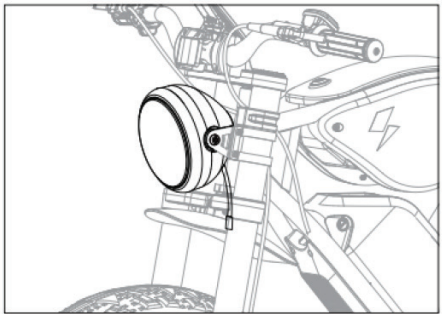

1. Remove the mounting bolts from the headlight using the 14mm box wrench.
2. Loosen the headlight bracket bolts using the 4 mm Allen wrench.
3. Slide the headlight in between the mounting brackets with the wire connection pointing down.

- Secure the headlight to the mounting brackets using the mounting bolts from the headlight. Plug the headlight plug into the wire harness.
- Tighten the headlight mounting bolts using the 14mm box wrench. **Suggested Torque: 10 Nm or 7.37 ft-lb**
- Then tighten the headlight bracket bolts using the 4mm Allen wrench.

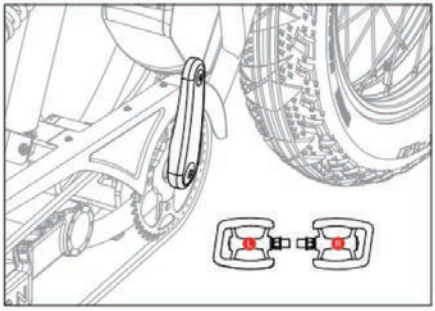

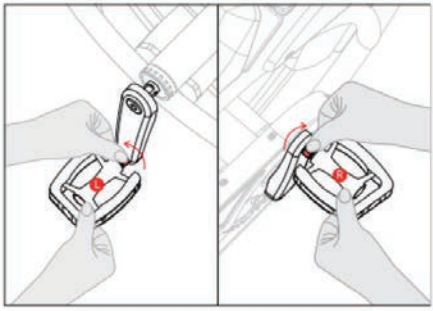

- First separate the left and right pedals.
- They are marked with a (R) for right and a (L) for left.

- Install the left pedal (non-chain side) by spinning it counter clockwise.
- Install the right pedal (chain side) by spinning it clockwise.
- Rotate the pedal slowly by hand first to avoid cross threading.
- Then tighten it with the 15mm box wrench.

TIRE INFLATION

The tires are only partially inflated when shipped from the factory. After completing the assembly steps, please refer to the following instructions to inflate your tires.

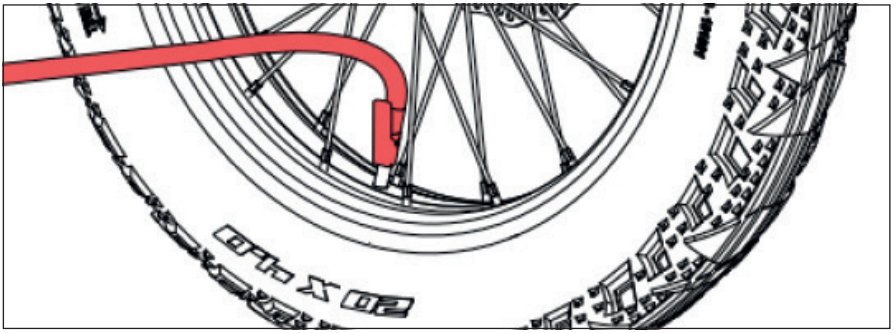

- Make sure the tire is properly centered and seated on the rim correctly.
- Make sure the valve stem is perpendicular to the rim and not leaning in one direction more than the other.
- Inflate both tires to the proper PSI
- PSI preference will change according to the rider's weight and the terrain.
- **Inflate to 20 PSI MAX.**

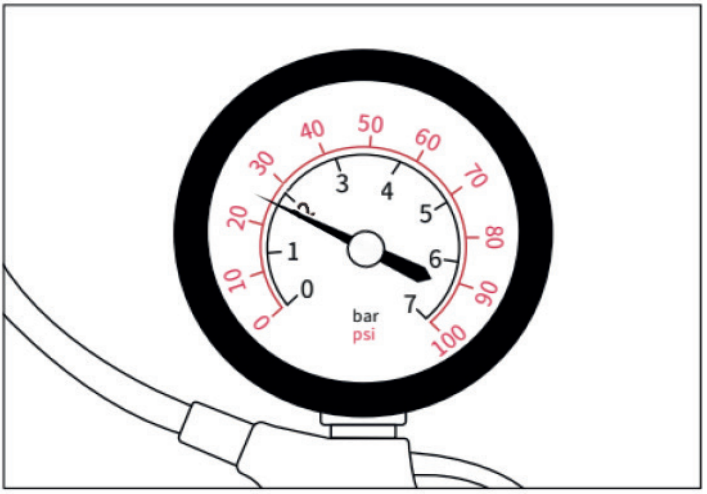

BATTERY

BEFORE YOUR FIRST RIDE!

- **Make sure your battery is fully charged.** Your Brat will arrive with a 20-30% charge level to conform with industry regulations for battery shipment. Charging your battery to **100%** will help maintain the overall life of the battery.
- **ALWAYS** turn off the power to both the bike and the battery before connecting or disconnecting the battery.
- Before use, please confirm that the battery is the original battery that come with your Brat. **DO NOT USE ANY OTHER BATTERY BRANDS OR OTHER MODELS.**
- Check that the battery is in good condition and ensure that there is no damage, leakage, or heat generation.
- Batteries that are inoperable or out of service should **NOT** be disassembled and should be recycled at an authorized recycling facility or returned to Volcon for recycling and disposal.

CHARGING THE BATTERY

You may either remove the battery from the bike or leave it in place while charging. Volcon recommends that you remove the battery from the bike whenever possible.

- To remove the battery from the bike, use the battery key to unlock the battery from the frame.
- Disconnect the battery from the battery holder by sliding the battery up and pulling away from the frame.
- To charge in place leave the battery connected to the bike.

CHARGING THE BATTERY CONTINUED

1. Plug the charger into a standard 2-prong US type A/B wall outlet. NOTE: The charger is a multi-power unit and can charge on either 110v and 240v.
2. Lift the small rubber charge port cover on the battery.
3. Plug the charger cable into the charge port.
4. The charger has an LED status indicator:
   GREEN light without battery connected
   = Ready To Charge
   RED light with battery connected
   = Battery Charging
   GREEN light with battery connected
   = Battery Fully Charged
5. When charging is complete, remove the charger from the battery.
6. Unplug the charger from power outlet and properly store it.
   ALWAYS ensure the battery charger is **UNPLUGGED** from the power source when not in use.

Only charge the battery between:
32°F - 113°F

Avoid submerging in water

Avoid close proximity to heat sources

For more information on battery storage and care please refer to your owner's manual

BEFORE EACH RIDE

- **First, make sure the bike is turned off.**
- Double check both the left and right brake levers by holding one brake lever and try to roll the bike back and forth. If it will not roll you know the brake is working properly. Then repeat the same step with the other brake lever.
- Check your chain to make sure it is clean and lubricated.
- Check the tire pressure to ensure your tires are inflated properly, 20psi MAX.
- Check your battery charge level.
- Make sure you wear personal protective gear, and always wear a helmet.
- Make sure you are mentally and physically able to operate an E-bike.

POWERING ON YOUR BIKE

Before powering on the Brat, always ensure that you are firmly seated on the bike, the kickstand is fully retracted parallel to the ground, and both hands are on the handlebar grips.

1. Ensure that your battery is fully seated and locked in the battery holder (remove battery key).
2. Flip the power switch to the on position, on the right side of the battery.
3. Press the power button on the D-pad until the display illuminates the Volcon name.
   Do not hold the brake levers down while turning on or an error code will appear on the screen.
   Do not hold the "+" down while turning on or the bike will be in a higher mode where the throttle is enabled.
4. After the display is powered on, it shows the real-time speed and the single trip mileage by default.
5. By pressing i on the D-pad, the display information switches between single mileage (Trip), Total mileage (ODO), maximum speed (MAX), and Average speed (AVG).

Power Button

Power Switch

OFF

ON

SELECTING A RIDE MODE

1. When you power on your Brat for the first time the bike will be in level 1 ride mode. (This mode is a pedal assist only mode and the throttle will not be activated when this mode is being used)
2. Press the + button on the D-pad to change up to the next ride mode (Press the - to go down a ride mode).
3. Repeat this process going all the way up to mode 4.

RIDE MODE	FUNCTIONALITY	PERFORMANCE LEVEL	TOP SPEED (MPH)
1	PEDAL ASSIST ONLY	NORMAL ACCELERATION	20
2	PEDAL ASSIST & THROTTLE ENABLED	NORMAL ACCELERATION	20
3	PEDAL ASSIST & THROTTLE ENABLED	ENHANCED ACCELERATION	20
4	PEDAL ASSIST & THROTTLE ENABLED	MAXIMUM ACCELERATION	20

NOTE: Refer to your owner's manual for instructions on how to unlock Off-Road Mode.

D-Pad

Display

VOLCON

Brat Quick Start Guide REV A

FCC Statement

This device complies with Part 15 of the FCC Rules. Operation is subject to the following two conditions:
(1)This device may not cause harmful interference.
(2)This device must accept any interference received, including interference that may cause undesired operation.
2. Changes or modifications not expressly approved by the party responsible for compliance could void the user's authority to operate the equipment.
Note:This equipment has been tested and found to comply with the limits for a class B digital device,pursuant to Part 15 of the FCC Rules. These limits are designed to provide reasonable protection against harmful interference in a residential installation.

This equipment generates uses and can radiate radio frequence energy and,if not installed and used in accordance with the instructions,may cause harmful interference to radio communications.However,there is no guarantee that interference will not occur in a particular installation.if this equipmemt does cause harmful interference to radio or television reception,which can be determined by turning the equipment off and on,the user is encouraged to try to correct the interference by one or more of the following measures:

- Reorient or relocate the receiving antenna.
- Increase the separation between the equipment and receiver.
- Connect the equipment into an autlet on a circuit different from that to which the receiver is connected.
- Consult the dealer or an experienced radio/TV technician for help.