Product safety instructions for

Portable Power Station

PE-1000

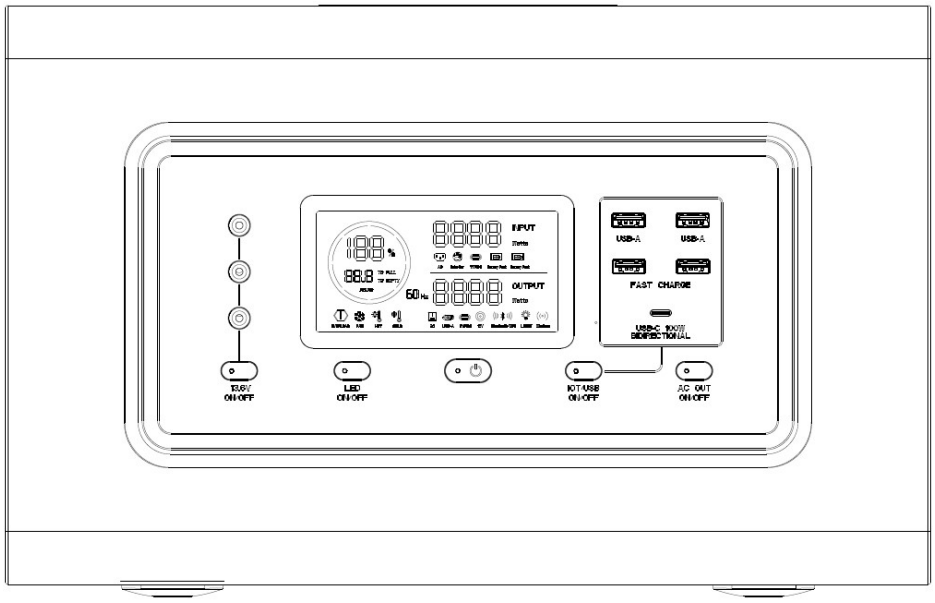

Directory

1. Disclaimer 2

2. Product introduction 2

2.1 Technical characteristics 2

3. Product specifications 3

3.1 The basic parameters 3

3.2 Ac output Specifications 3

3.3 Dc output Specifications 3

3.4 The input specifications 3

4. Packing list 4

5. Product appearance and usage introduction 4

5.1 Product Appearance Introduction 4

5.2 LCD Screen Introduction 5

6. Charging mode 7

6.1 Ac input 8

6.2 Solar energy input 8

6.3 Car charger input 8

6.4 USB - C input 9

7. Discharge (output) 9

7.1 Ac output port 9

7.2 Dc output port (see Section 5.1 for this output mode) 10

8. INSTALLATION INSTRUCTIONS 10

9. INSTRUCTIONS PERTAINING TO RISK OF FIRE, ELECTRIC SHOCK, OR INJURY TO PERSONS 10

10. OPERATING INSTRUCTIONS 13

11. STORAGE AND MAINTENANCE 13

12. HANDLING AND STORAGE 13

13. FCC Caution 13

14. Frequently Asked Questions 14

1. Disclaimer

First of all, thank you very much for your trust in our products, choose Songsheng Innovative portable energy storage power supply, in order to protect your rights and interests, before using our products, please carefully read the product safety instruction manual, to ensure that you fully understand the correct use. If the product is not operated correctly, it may cause serious injury to oneself or others, or cause damage to the product and property loss. If the damage is caused by non-compliance with the instructions, the warranty cannot be granted. The Company shall not be liable for any loss caused by force majeure such as fire, typhoon, flood and earthquake, or intentional negligence, misoperation or other abnormal circumstances of users. In addition, with the passage of time, the product specifications and appearance are subject to change without prior notice。

2. Product introduction

This product is the latest PE-1000 series portable energy storage power supply developed by the company, born from the ultimate innovation and mature technology. The company follows the national industry certification standards: UL2743, FCC, UN38.3. Equipped with a 1000W power inverter and 1008WH lithium iron phosphate battery pack, it uses 120V pure sine wave AC output. In addition, it supports ECO mode, where AC or DC output automatically turns off during low power consumption or no-load to save power consumption. The ergonomic design makes it easier to lift. Its appearance not only solves people's outdoor electricity problems, but also improves the quality of people's outdoor life. In general, this product is the best choice for portable energy storage, to meet your emergency backup and outdoor needs as much as possible。

2.1 Technical characteristics

- Car gauge level cell, Pure sine wave, which doesn't damage electrical appliances
- Long life: > 2500
- two-way inverse technology: fast charging, charging 80% < 1H
- ECO mode (APP version)
- BMS battery management system is 8-fold protected

- 4 ways to recharge
- 4 Re output mode
- 10 output ports
- The product is ergonomically designed to lift with less effort

3. Product specifications

3.1 The basic parameters

Model	PE-1000
The net weight	13kg
The gross weight	13.5kg
Size	360 x 186 x 226mm
Discharge temperature range	-20℃- +45℃ (-4℉- 113℉)
Charging temperature range	0℃- +45℃ (32℉- 113℉)
Storage temperature range	-20℃- +60℃ (-4℉- 140℉)
Working humidity	5-90%
Store humidity	5-95%
Work at an altitude of	2000m
The cooling way	Intelligent air cooling
Battery capacity	1008Wh, 22.4VDC, 45Ah
The battery type	LiFePO4
The IP rating	IP20

3.2 Ac output Specifications

The output power x 2	1000W (Total)
The output current x 2	10A (Total)
The output voltage	100-120VAC
The output frequency	50/60Hz

3.3 Dc output Specifications

DC5521 x 3	13.6VDC/5A x 3 (10A Total)
USB-A x 2	5VDC/2.4A x 2
USB-AQuick charge x 2	5VDC/3A x 2, 9VDC/2A x 2, 12VDC/1.5A x 2
USB-C x 1	5/9/12/15VDC,3A; 20VDC,5A

3.4 The input specifications

Ac rated input	100-120VAC, 50/60Hz, 10A, 1000W
Ac input range	90-140VAC, 47-63Hz
Solar / Car charger input	11-55VDC, 10A, 300W
USB-C input	9VDC/2A, 12VDC/1.5A, 20VDC/5A

4. Packing list

The name of the	The number of
Product body	1 PCS
Alternating current charging cable	1 PCS
The car charging cable	1 PCS
DC5521 switch cigarette lighter cable	1 PCS
Booster cable	1 PCS
Product warranty card	1 PCS
Product safety instructions（Read it before use and store it for future reference）	1 PCS

5. Product appearance and usage introduction

5.1 Product Appearance Introduction

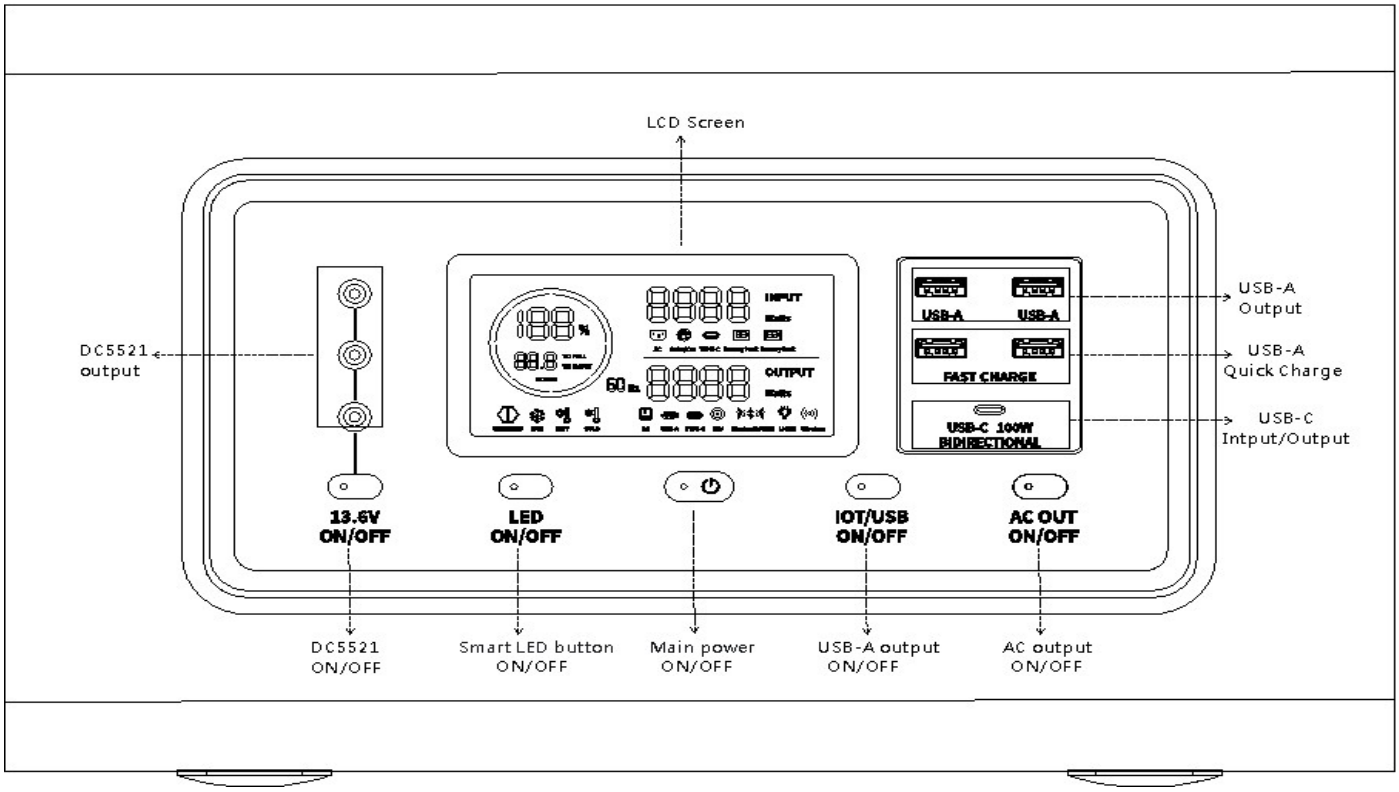

1) Main power on/off button: press the main power to turn on the product. After the product is turned on, the LCD screen will be lit and the main power indicator will enter the breathing mode. When this product holds After 5 minutes without any operation, the product will enter the hibernation state and the display screen will automatically turn off. When the product has operation or load change, the display screen will automatically light up. If you need to start or close the display screen, please press any switch. Long press the main power switch to

shut down the product. The standby time of the product is 8 hours. If other output power switches are not turned on and no load is connected to the product, the product will automatically shut down after 8 hours。

2) DC output button: Press this button to start output current for the first time and shut down output for the second time。

3) Intelligent LED light button: Short press this key, LED light is the brightest for the first time, ½ bright for the second time, ¼ bright for the third time, burst and flash for the fourth time, SOS(emergency call) for the fifth time, and off for the sixth time。

4) USB-A output button: Press this button for the first time to start current output, and for the second time to shut down output。

5) AC output button: Short press this button to start current output for the first time, and shut down output for the second time。(When the AC power is on, hold the AC power button for 10 seconds to switch the AC frequency)

6) USB-C output: Useful after ensuring the total power supply is on。

5.2 LCD Screen Introduction

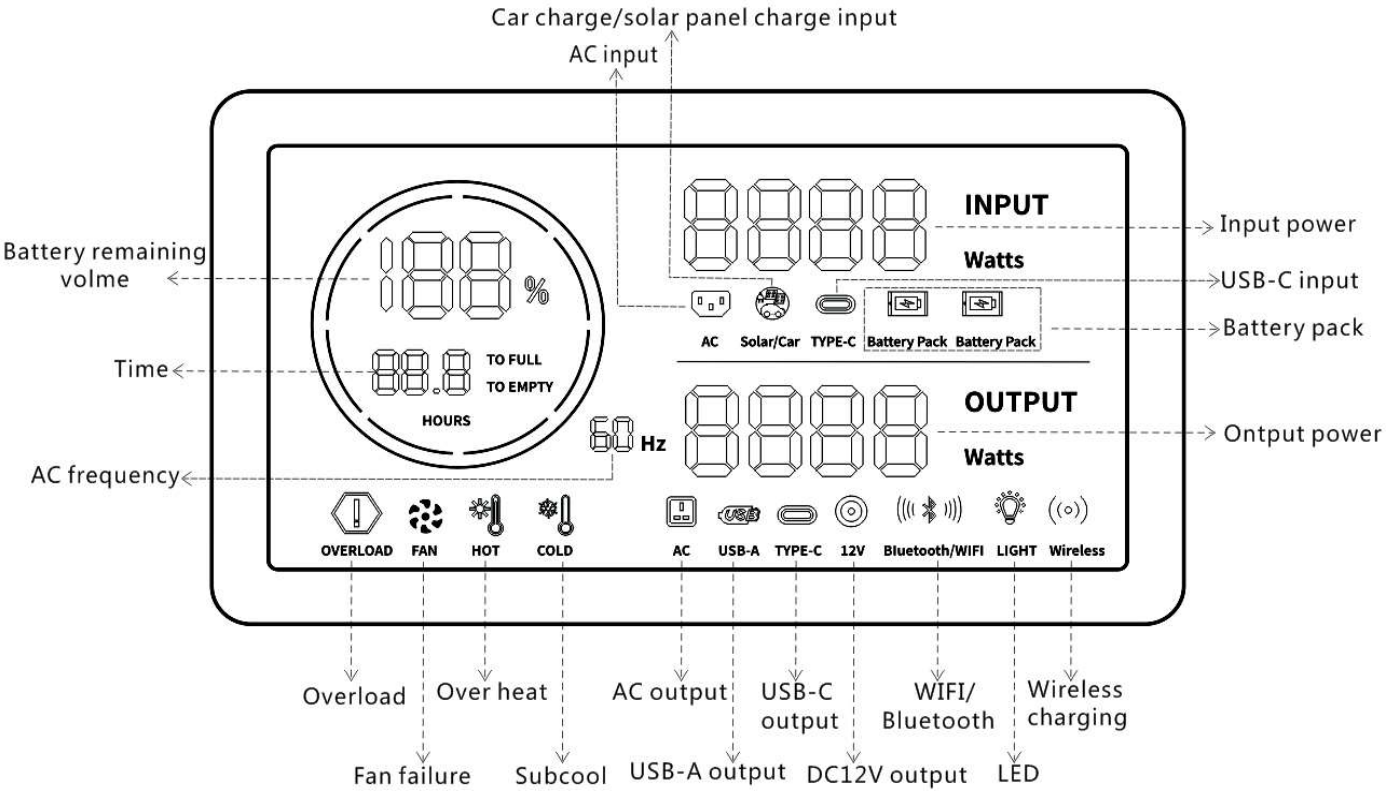

icon	The name of the icon	Icon Status Description
188 %	Power logo	Used to display electric quantity
TO FULL	Battery charging label	If this icon lights up, the power supply is charged
TO EMPTY	Battery discharge Label	If this icon is on, the power supply is discharging
88.8 HOURS	Time to identify	In charge state, the charging duration is displayed, and in discharge state, the discharging duration is displayed
OVERLOAD	Overload alarm identifier	If this icon lights up, the load is exceeded
FAN	Fan Fault Identification	If this icon is on, the fan is blocked
HOT	High temperature alarm mark	If this icon is on, the temperature is too high
COLD	Low temperature alarm mark	If this icon is on, the temperature is too low
8888 INPU Watts	Charging power	Used to display charging power

AC	AC Charging logo	If this icon is on, the power supply is in AC charging state
Solar/Car	On-board/PV panel charging identifier	If this icon lights up, the power supply is in the vehicle charging or photovoltaic panel charging
USB-C	USB-C Charge/discharge identifier	If this icon lights up, the power supply is in USB-C charging/discharging mode
Battery Pack	Power packet identifier	When this icon lights up, it indicates the power pack
8888 OUTPUT Watts	Discharge power	Displays the discharge power
AC	AC Discharge logo	If this icon is on, the power supply is in the AC discharge state
USB-A	USB Discharge logo	If this icon is on, the power supply is in the UCB discharge state
12V	Vehicular discharge mark	If this icon lights up, the power supply is in the on-board discharge state
Bluetooth/WiFi	Bluetooth/WiFi	If this icon is on, Bluetooth or WiFi is connected
LIGHT	The LED logo	If this icon is on, the LED light is on

6. Charging mode

This product supports four charging modes: AC input, solar input, car charging input, USB-C input。

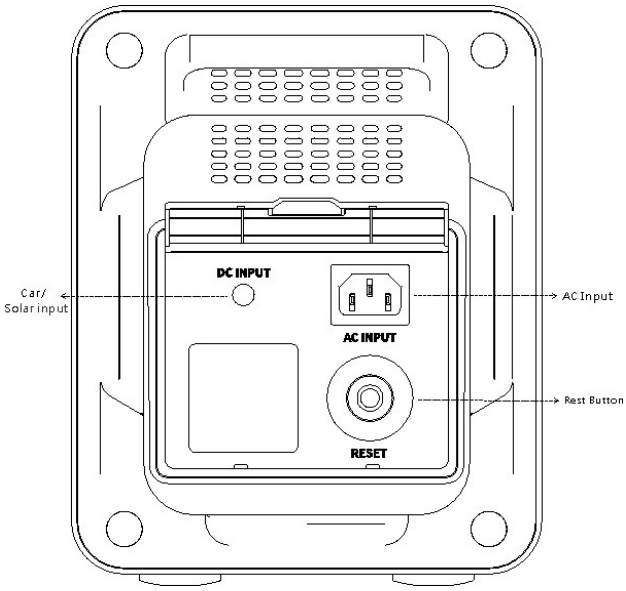

Reset button: In case of short circuit during input/output current, the device will automatically stop input/output to protect the device. In this case, you need to press switch button shortly, and the device will resume input/output current.

6.1 Ac input

Connect the input plug of AC power cable to the wall socket, and connect the other end to the AC charging input port of the product. Press the AC output button on the screen to start charging. The advanced control circuit is built into the device, and it will automatically stop charging after being fully charged (about 2-3 hours)。(Please operate according to the specifications)

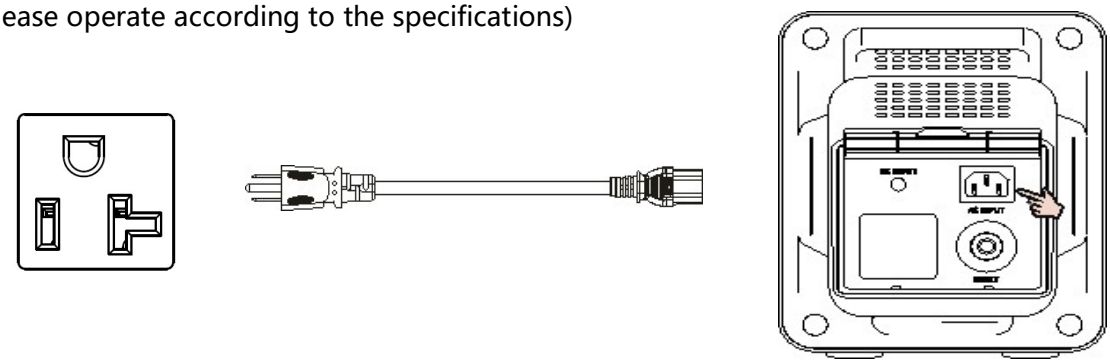

6.2 Solar energy input

Connect solar panels (in series or parallel). Before connecting solar panels, ensure that the output voltage of the solar panels is within the product specifications to avoid damage to the products. Open circuit voltage range: 11-55VDC, and then connect the solar panel to the solar input port through the solar charging cable to automatically charge, using the solar panel charging, the maximum input current and power are 10A and 300W, fully charged (about 3-4 hours) will automatically stop charging

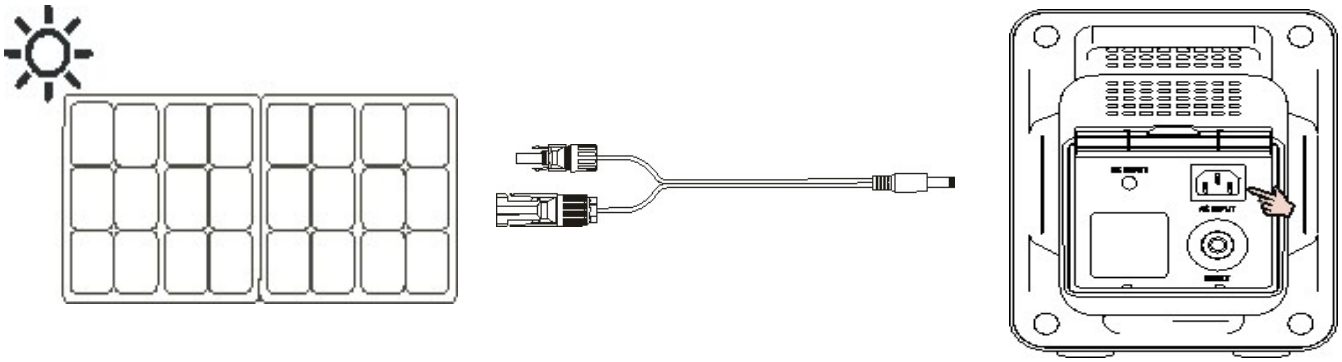

6.3 Car charger input

Connect the product to the car charge input port through the vehicle charging cable, and ensure that the car charge port is in good contact with the cigarette lighter of the car charge input cable. It is necessary to use the

car to charge after the car is ignited and started. When the device is fully charged (about 3-4 hours), it will automatically stop charging。 (Please operate according to the specifications)

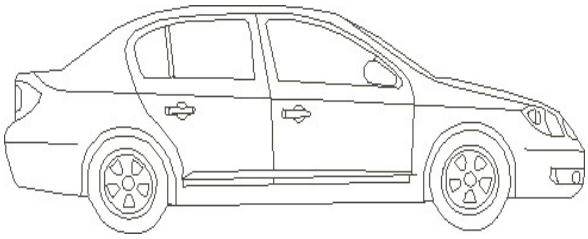

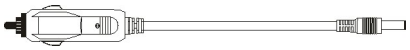

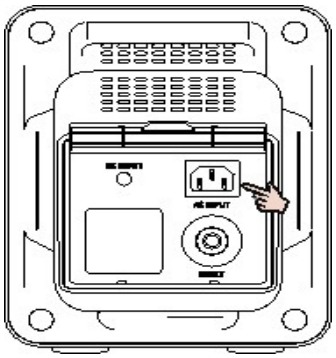

6.4 USB - C input

Connect the power adapter to the USB-C cable, and the input port will automatically start charging after connecting with the product. When the device is fully charged (about 10-12 hours), it will automatically stop charging。 (The output is done the same way)

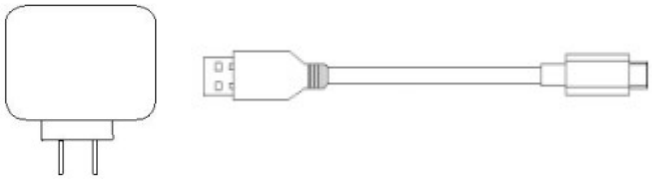

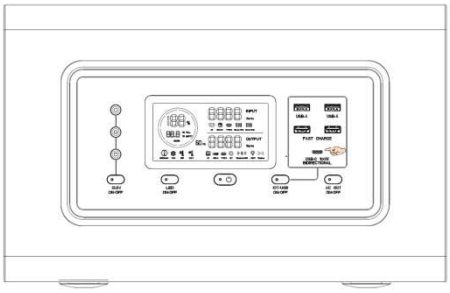

7. Discharge (output)

7.1 Ac output port

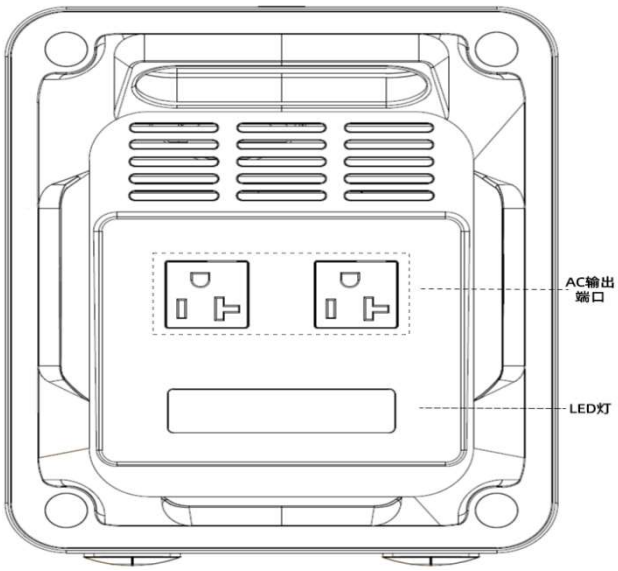

The maximum output power of this product is up to 1000W, and the instantaneous power is up to 1200W. Please ensure that the load power connected to the device does not exceed 1000W.After the main power supply is turned on, press the AC button to turn on the AC output port, and press the AC output port again to turn off the power supply port。

7.2 Dc output port (see Section 5.1 for this output mode)

- ✧ DC5521 Output port x3 (traditional port for routers/cameras and older laptops, etc.)
- ✧ USB-C Output port x1（PD100W）
- ✧ USB-A Output port x2
- ✧ USB-A Quick charge x2

8. INSTALLATION INSTRUCTIONS

When using AC ground charging, please use Songsheng Innovation official standard AC AC charging cable for charging. The plug of AC charging cable should be directly connected to the wall that supports more than 10A current. Songsheng Innovation will not take any responsibility for losses caused by using other unofficial charging cables or not following the standard operation。

9. INSTRUCTIONS PERTAINING TO RISK OF FIRE, ELECTRIC SHOCK, OR INJURY TO PERSONS

IMPORTANT SATETY INSTRUCTIONS and SAVE THESE INSTRUCTIONS:

WARNING – When using this product, basic precautions should always be followed, including the following：

a. Read all the instructions before using the product，Check all materials. If the device is damaged, cracked, creepage, or disconnected, stop using it immediately。

b. Keep this product out of reach of children and pets。To reduce the risk of injury, close supervision is necessary when the product is used near children。

c. Do not put fingers or hands into the product（e.g. AC or DC ports, Ventilation opening, etc）。

d. Use of an attachment not recommended or sold by power pack manufacturer may result in a risk of fire, electric shock, or injury to persons。

e. To reduce risk of damage to the electric plug and cord, pull the plug rather than the cord when disconnecting the power pack。

f. Do not use a battery pack or appliance that is damaged or modified. Damaged or modified batteries may exhibit unpredictable behavior resulting in fire, explosion or risk of injury。

g. Do not operate the power pack with a damage cord or plug, or a damaged output cable。

h. Do not disassemble or puncture the power pack in any way with sharp objects, take it to a qualified service person when service or repair is required. Incorrect reassembly may result in a risk of fire or electric shock。

i. To reduce the risk of electric shock, unplug the power pack form the outlet before attempting any instructed servicing。

j. When charging the internal battery, working in a well ventilated area and do not restrict ventilation in any way，Otherwise, the product will be permanently damaged。

k. Under abusive conditions, liquid may be ejected from the battery; avoid contact. If contact accidentally occurs, flush with water. If liquid contact eyes, additionally seek medical help. Liquid ejected from the battery may cause irritation or burns。

l. Before using this product, please strictly observe the ambient temperature in this manual，Do not expose a power pack to fire or excessive temperature. Exposure to fire or temperature above 130°C (265°F) may cause explosion。The temperature is too low, which may degrade the product performance and fail to meet the requirements of normal use。

m. Have servicing performed by a qualified repair person using only identical replacement parts. This will ensure that the safety of the product is maintained。

n. **GROUNDING INSTRUCTIONS:**

This product must be grounded. If it should malfunction or breakdown, grounding provides a path of least resistance for electric current to reduce the risk of electric shock. This product is equipped with a cord having

an equipment grounding conductor and a grounding plug. The plug must be plugged into an outlet that is properly installed and grounded in accordance with all local codes ordinances。

o. WARNING – Improper connection of the equipment grounding conductor is able to result in a risk of electric shock. Check with a qualified electrician if you are in doubt as to whether the product is properly grounded. Do not modify the plug provided with the product – if it will not fit the outlet, have a proper outlet installed by a qualified electrician。

p. Do not put the product near heat source and fire source. Do not place heavy objects on this product。

q. This product is strictly prohibited from contacting any liquid. If it is damp, please let the product completely dry and wipe it thoroughly with a dry cloth before use。

r. Do not use this product in rain or humidity, strong static electricity or strong magnetic field environment.

s. Please use cables designed specifically for the product and we do not accept any liability for damage caused by third party equipment, which may void your warranty。

t. **Warning -** Improper connection of the ground conductor may cause an electric shock hazard. If you are in doubt about whether the product is properly grounded, consult a qualified electrician. Do not modify the plug that comes with the product - if it does not fit into the socket, have a suitable socket installed by a qualified electrician。

u. **Warning**: Do not insert your finger or hand or any foreign object into any port (AC, DC or vent) of the product. This product can generate potentially lethal AC power and is as dangerous as a household wall outlet。

v. **Warning:** It is dangerous for anyone other than authorized personnel to perform any service or repair operation involving the replacement of internal batteries and other equipment components。

w. **Discard**: If conditions permit, please discharge the battery of the product thoroughly and put the product in the designated recycling bin. If the fault of the product causes the product to be unable to discharge completely, do not directly discard the battery in the battery recycling bin. Contact a professional battery recycling company

for disposal. This product contains batteries, which are dangerous chemicals and are strictly prohibited to be discarded in ordinary dustbins. For details, please follow the local laws and regulations on battery recycling and disposal。

10. OPERATING INSTRUCTIONS

- WARNING: Do not attempt to modify or repair the power pack。
- The device shall be used indoors only and no outdoor use in allowed under any conditions。
- The pack is not to be stored or kept in a vehicle。
- For other operations and applications of the product, please refer to Articles 4 to 10。

11. STORAGE AND MAINTENANCE

a. When storing or using the product, please keep away from heat sources, water sources and other metal objects。

b. If there is dirt on the interface of the product, please turn off all power buttons and use dry, soft and clean cloth or paper towel to clean and wipe the product. Do not use any resin with dissolving function such as gasoline, volatile oil, diluent and kerosene。

c. If the power of this product is less than 10% after use, please charge to 80% in storage, if in the case of serious shortage of power idle for a long time, will cause irreversible damage to the cell, which will reduce the service life of this product。

d. If the battery of the product is seriously insufficient and idle for a long time, the product will enter the deep sleep mode, and the product can be restored only after it is fully charged before being used again。

12. HANDLING AND STORAGE

a. Please place the product carefully during handling to prevent damage caused by dumping. The product cannot be moved during use, charging and discharging. It should be kept flat,。

b. Do not move the product in use. Please avoid external impact, falling, and sudden vibration, which may lead to poor connection of internal hardware。

c. If long-term storage is required, please charge and discharge the product once every 3 months (that is, discharge the product to 30% first and then charge it to 80%)。

d. To extend the battery life, do not store the product at below -10 ° C or higher than +45 ° C for a long time, and avoid direct sunlight。

13. FCC Caution

This device complies with part 15 of the FCC Rules. Operation is subject to the following two conditions: (1) This device may not cause harmful interference, and (2) this device must accept any interference received, including interference that may cause undesired operation.

Any Changes or modifications not expressly approved by the party responsible for compliance could void the user's authority to operate the equipment.

Note: This equipment has been tested and found to comply with the limits for a Class B digital device, pursuant to part 15 of the FCC Rules. These limits are designed to provide reasonable protection against harmful interference in a residential installation. This equipment generates uses and can radiate radio frequency energy and, if not installed and used in accordance with the instructions, may cause harmful interference to radio communications. However, there is no guarantee that interference will not occur in a particular installation. If this equipment does cause harmful interference to radio or television reception, which can be determined by turning the equipment off and on, the user is encouraged to try to correct the interference by one or more of the following measures:
-Reorient or relocate the receiving antenna.
-Increase the separation between the equipment and receiver.
-Connect the equipment into an outlet on a circuit different from that to which the receiver is connected.
-Consult the dealer or an experienced radio/TV technician for help.

The device has been evaluated to meet general RF exposure requirement. The device can be used in portable exposure condition without restriction.

14. Frequently Asked Questions

Q1: What devices can the product power/charge?

Answer: This product can solve the power supply problem of a variety of equipment, suitable for photography, camera, drone, mobile phone, computer, refrigerator, rice cooker, electric kettle, lighting and so on Electricity for

outdoor use. The maximum output power of the product is 1000W, so please ensure that the total power of your device does not exceed this power, and ensure that the sum of all load equipment power is less than the rated power。

Q2: Can you charge and discharge at the same time?

Answer: Yes, the product supports simultaneous charging and discharging. When you plug the power supply of this product into the wall socket, the electronic device inserted into it will be directly powered by the grid, not by the battery power supply of the product. If there is a power failure, the product will automatically switch to the battery power supply within 30 seconds。

Q3: How to estimate the operation time of the equipment? **(Note: The following are estimates and may vary by environment, usage, and firmware version)**

Answe: By using the power of the device to estimate the running time, product capacity Wh*DOD* conversion efficiency/device power = running time (hours)。For example, the portable power PE-1000 battery capacity is 1000Wh, 1000Wh*90%*90%/100≈8.1hours (Conversion efficiency=90%, DOD=80%-90%(It is determined by ambient temperature and discharge rate) , To prolong the battery life, the system sets the battery discharge depth to 90%. Only 90% of the battery capacity can be discharged, and 10% is reserved to prevent battery overdischarge.)

Q4: What does ECO mode mean?

Answe: In ECO mode (the default setting), the AC output is less than 10W or the DC output is less than 1W, lasting for 4 hours. The AC output or DC output is automatically turned off to save power consumption. We hope this design can benefit to our users。

Q5: Can I caryy this product on the plane?

Answe: No。

Q6: Can this product be connected to a home circuit breaker box?

Answe: No。