FOBOOST

Fiber Optical

Cell Signal Booster

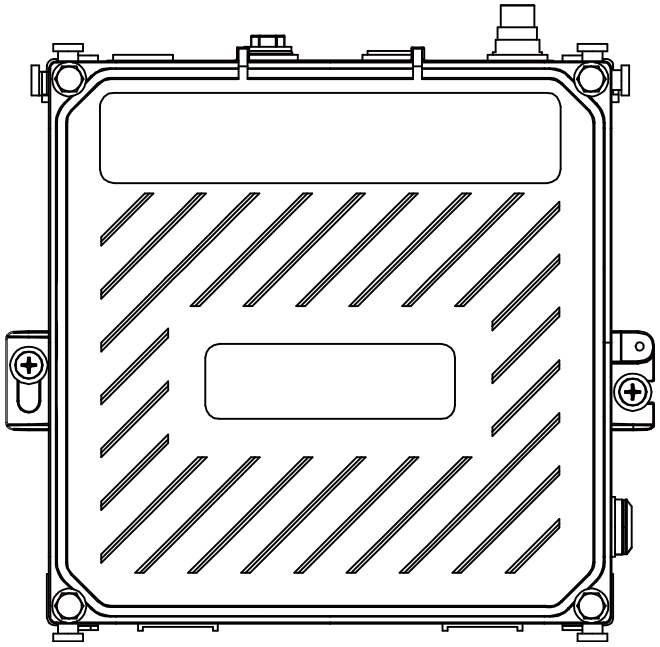

Installation Guide

NEED HELP ?

fddiboost@163.com

3-year manufacturer‘s warranty

CATALOG

Package Contents 1

Preparation 2

STEP 1: Master Unit and Remote Unit Placement 3

STEP 2: Mount Outside Antenna 4

STEP 3 : Route & Connect Outside Antenna To Master Unit 7

STEP 3 : Route & Connect Inside Antenna To Remote Unit 8

STEP 4: Connect Master Unit To Remote Unit 10

STEP 5: Power Up The Booster & Optimize The System 12

Measuring Booster Performance 13

Safety Guidelines 15

Specifications 16

Warranty 17

Package Contents

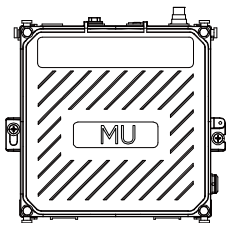

Master Unit (MU)

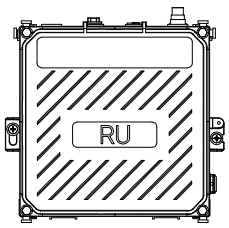

Remote Unit (RU)

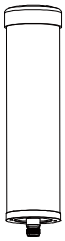

Outside Omni Antenna

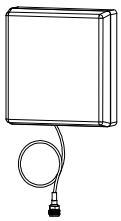

Inside Panel Antenna

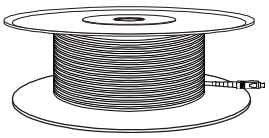

100ft Fiber Optic Cable

10ft Fiber Optic Jumper (×2)

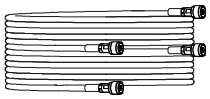

30ft LMR240 cable (×2)

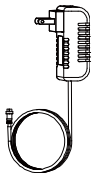

Power Supply (×2)

Protection box (×2)

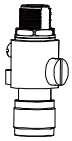

Lighting Surge Protector

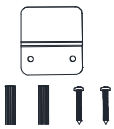

Wall Mount Bracket

Pole Mount Bracket

Preparation

You Will Need (tools not included)

Make sure the following materials are prepared and ready for your installation.

1 to 2 hours

2 people

- Ladder
- Drill (if routing cable through wall)
- 1”-3” diameter existing pole for mounting Outdoor Antenna (Pole Mount can be purchased separately if needed)
- Recommended: Power Strip with surge protection

NOTE: Please find the most optimal location for the Inside and Outside Antenna before permanently fixing it.

Step 1: Master Unit and Remote Unit Placement

Place the **Master Unit** and **Remote Unit** in your desired location.

NOTE: Do not connect booster to power until the system is fully installed.

Choose right position for the **Master Unit** and **Remote Unit**

- 1 feet away from any other metallic objects
- 3 feet away from any windows
- The distance between the **Master Unit** and the **Remote Unit** should be bigger than 100 feet. Because the length of fiber optic cable is 100ft.

NOTE: Please find the most optimal location for **Master Unit** and **Remote Unit** before permanently fixing it.

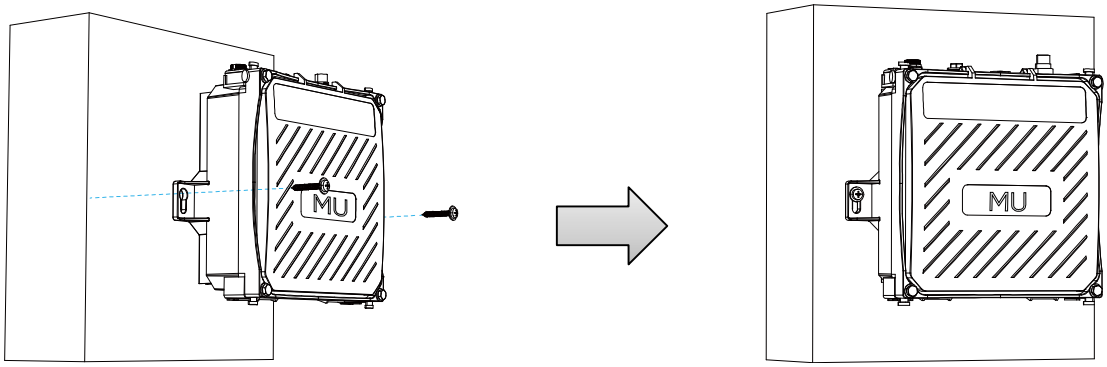

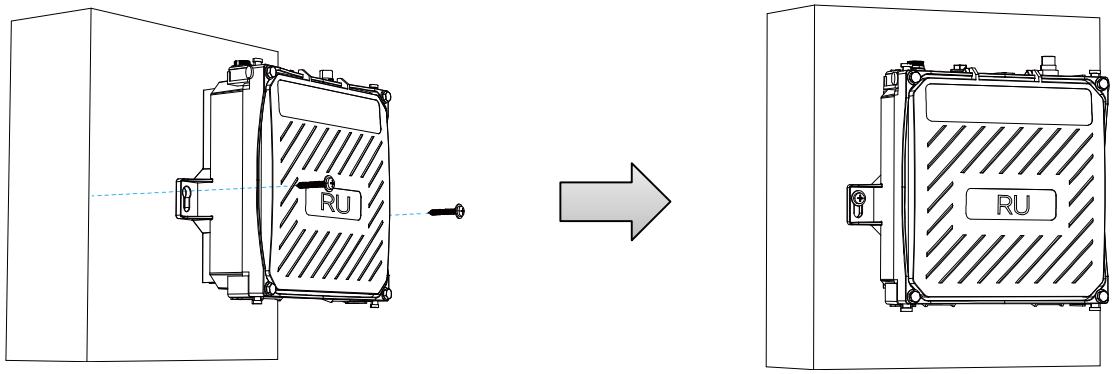

Step 2: Mount Outside Antenna

Pole mounting and wall mounting are included.

Attach the **Mount** to the Outside Antenna and use the **Bracket Clamps** to attach the Antenna to a pole or exhaust pipe.

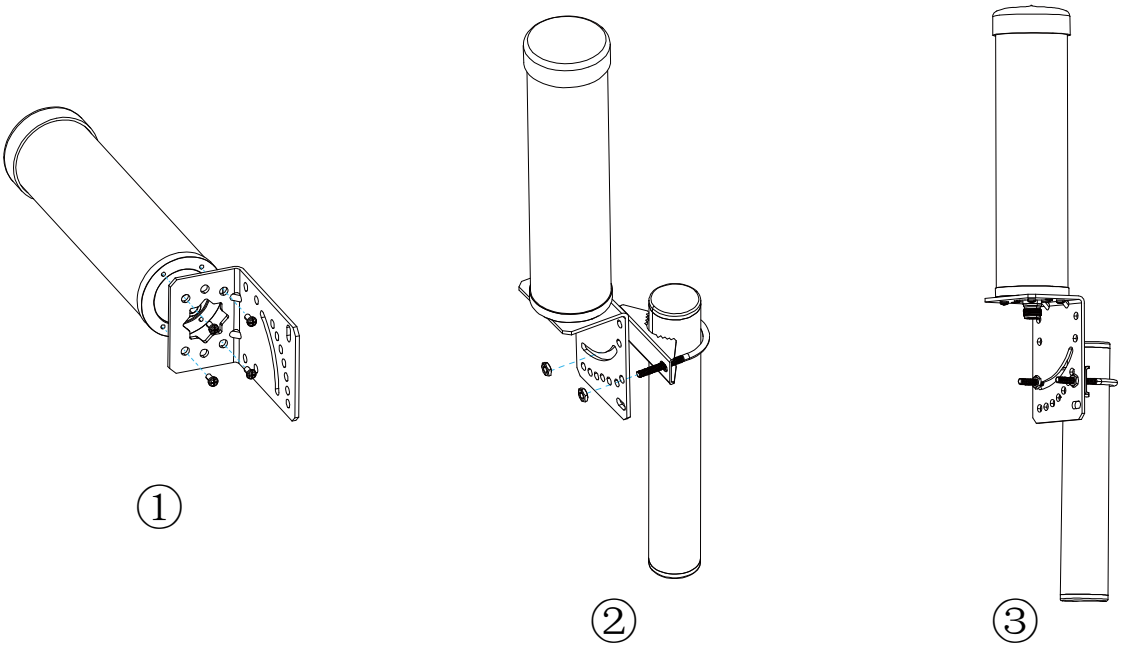

Make sure that the outside unit is mounted at least 3 feet away from any windows.
Outdoor antenna must be installed over the roof line.

NOTE: Mounting on existing roof exhaust pipe would be a good time-saver option. Watch out for power lines.

Install the **outside antenna** in the corner of the building and face it towards nearest cell phone tower. To find the nearest tower, use an app such as 'Open Signal'. **This is the most critical step of the installation process because it will determine the overall performance of the booster system.**

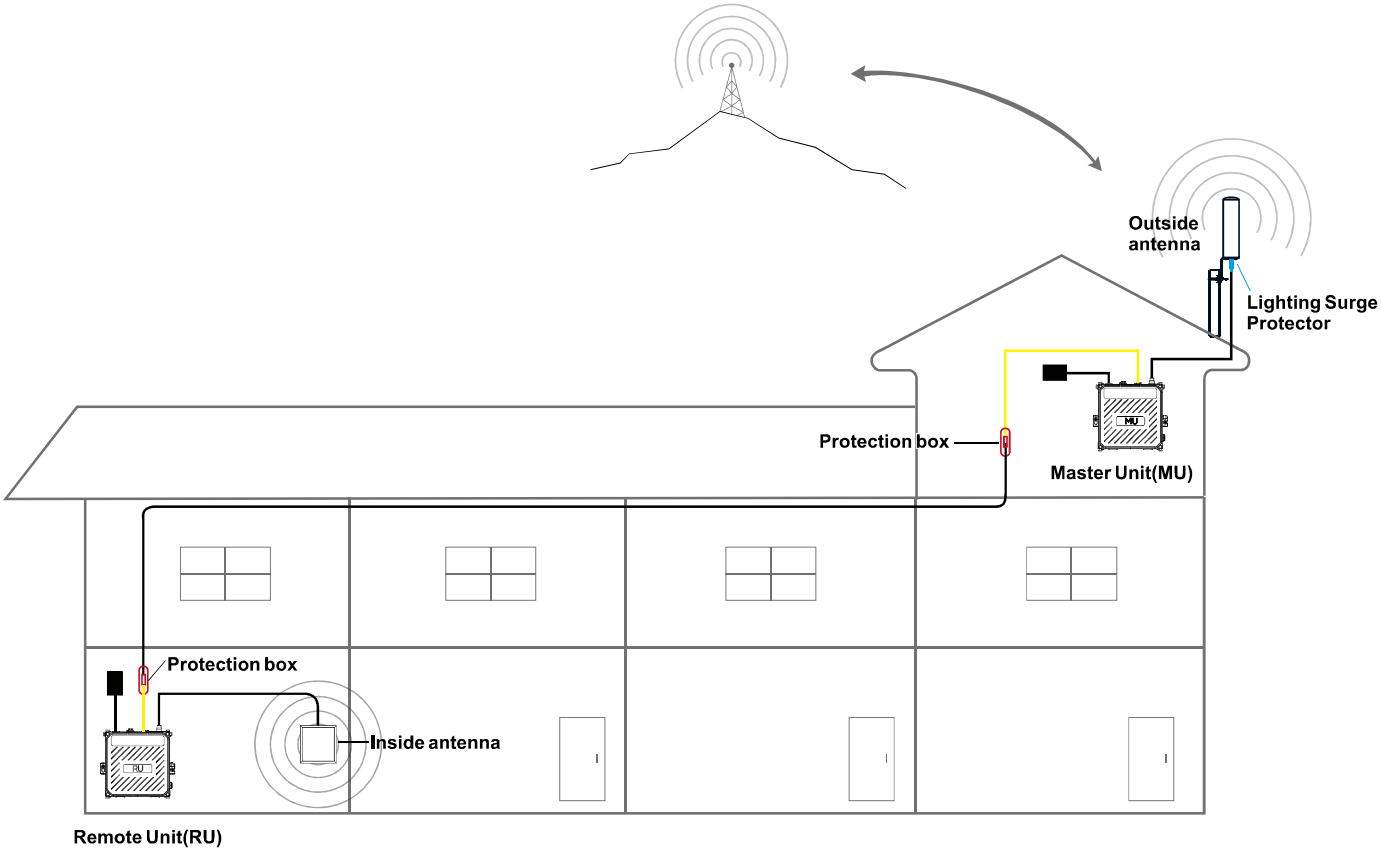

Keep enough distance between outside and inside antenna

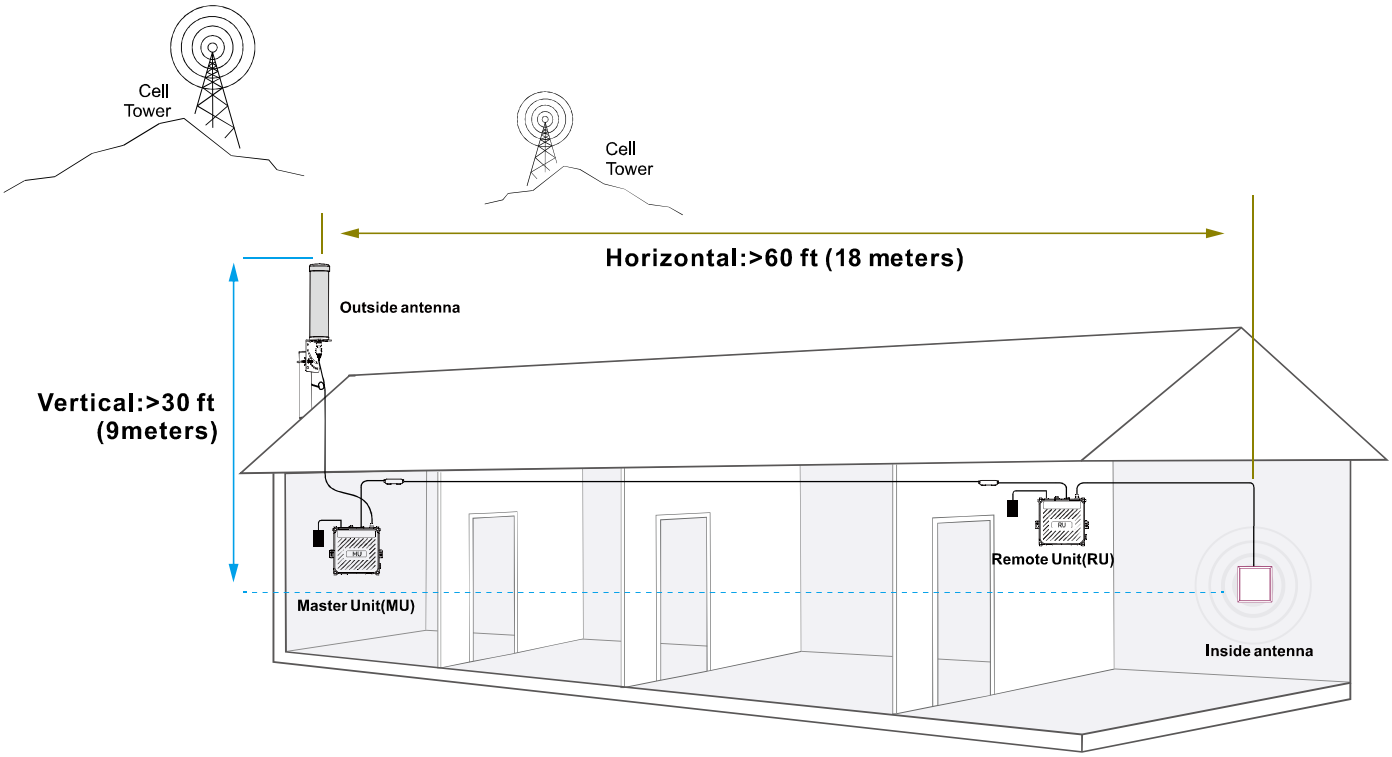

NOTE:
The Outside Antenna must be at least
60 feet (18 meters) **horizontal distance**
or
30 feet (9 meters) **vertical distance** from the Inside Antenna for best performance.

The greater the separation between the Inside and Outside Antennas, the better performance you will get from the booster.

Step 3: Route & Connect Outside Antenna To Master Unit

Connect the **30ft LMR240 cable** to **Outside Antenna** and route cable into the home, secure the cable near the antenna. All connections should be **finger tightened** only.

Route cable to the **MU** and connect to the port labeled '**OUTSIDE**'.

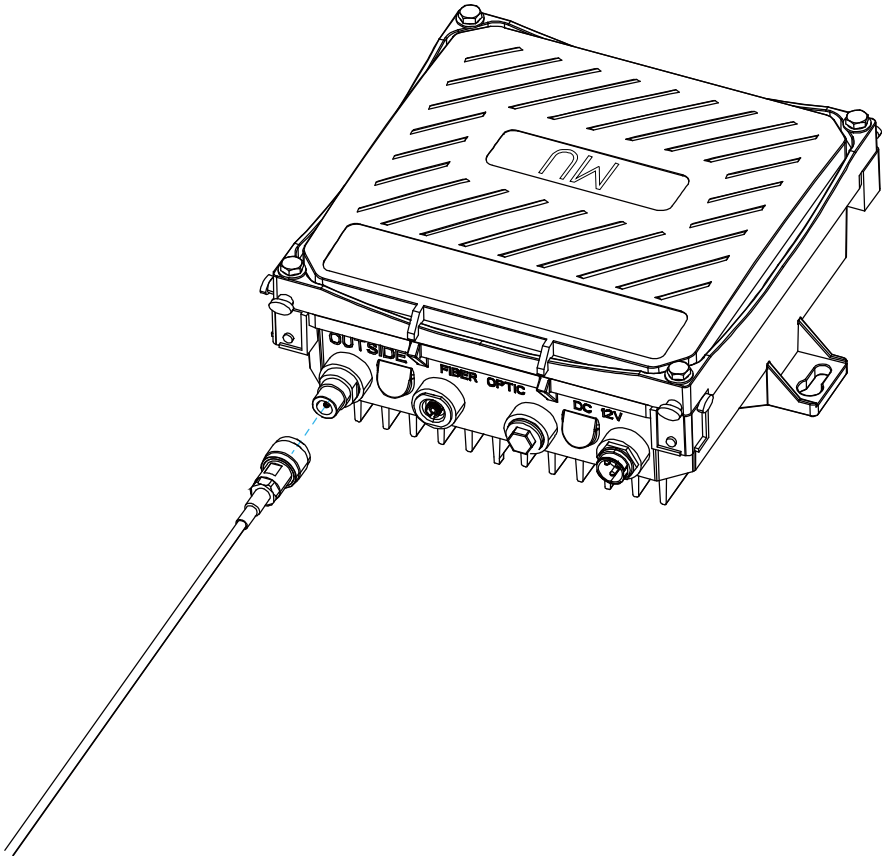

Step 3: Route & Connect Inside Antenna To Remote Unit

Connect the **30ft LMR240 cable** to **Inside Panel Antenna,** and connect the other end of the cable to the '**INSIDE**' port on the **RU**.

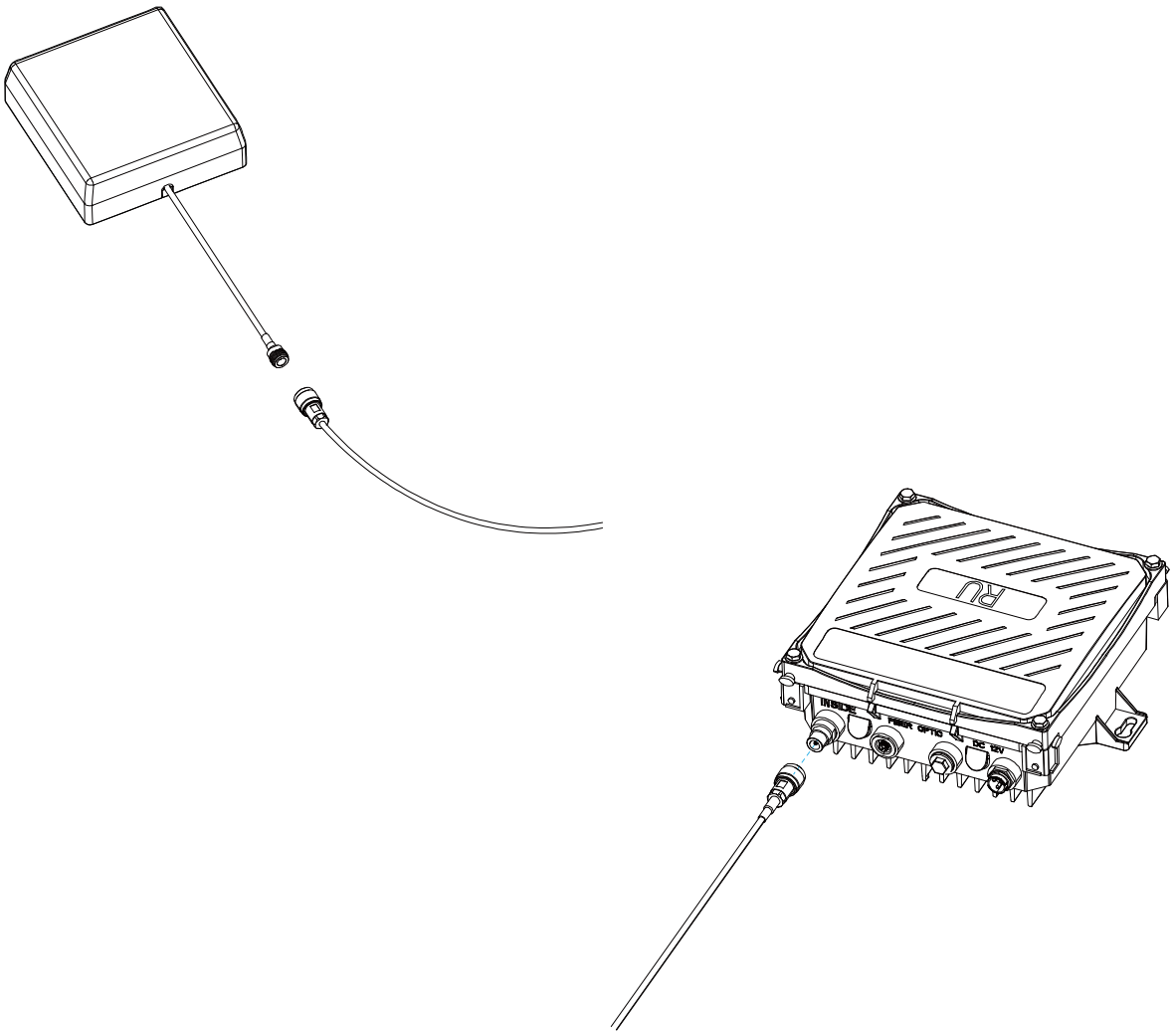

(STEP 3-A cont.)

Wall Mounting Option

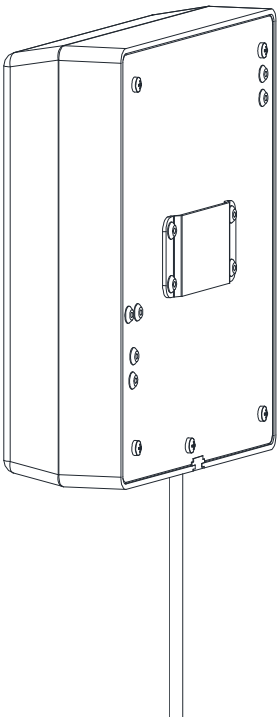

Fasten bracket to back of Inside Antenna

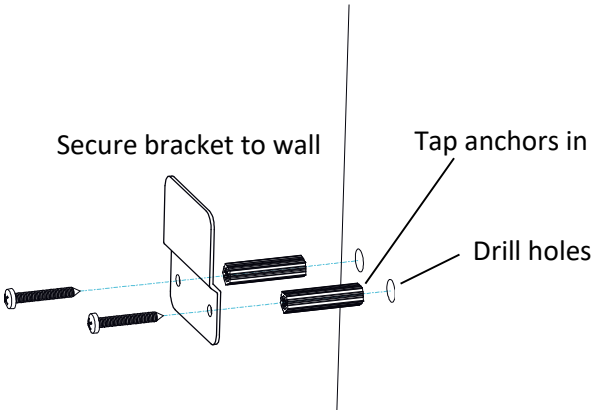

Note: Choosing a location facing all over your home will help to maximize your coverage area.

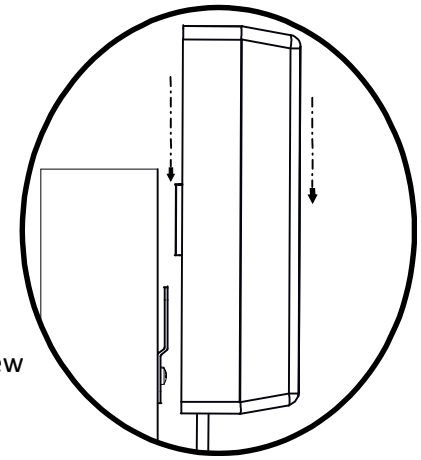

Step 4: Connect Master Unit To Remote Unit

Connect two 10ft **Fiber Optic Jumpers** to the ports labeled "**FIBER OPTIC**" on the **MU** and **RU** respectively.

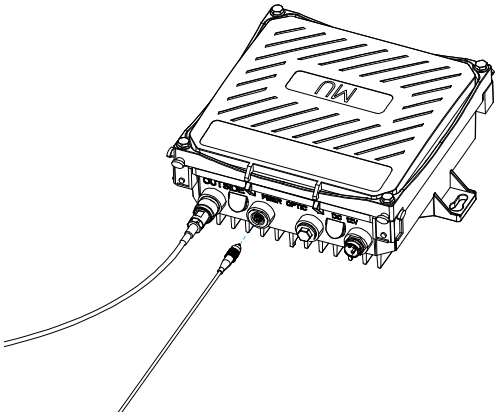

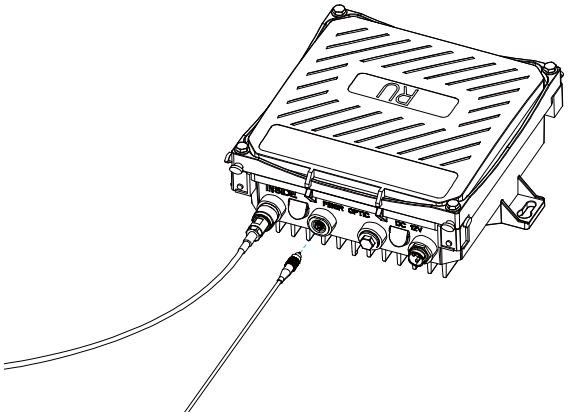

Insert the SC connector of the **fiber optic jumper** connecting the MU into the protective box. Snap the connector into one end of the protection box's SC-to-SC coupler.
Insert the100ft **fiber optic cable**'s SC connector into the opposite end of the protection box. Snap the connector into the other end of the SC-to-SC coupler.

Close the protection box, making sure both **fiber-optic cables** are threaded snuggly in the gaskets at the exit points.

Repeat steps with the the **fiber optic jumper** connecting the RU.

Step 5: Power Up The Booster & Optimize The System

Plug into the **power supplys** on **MU** and **RU** respectively, and connect them to the nearest power outlet.

NOTE: We strongly recommend using a power strip with surge protection.

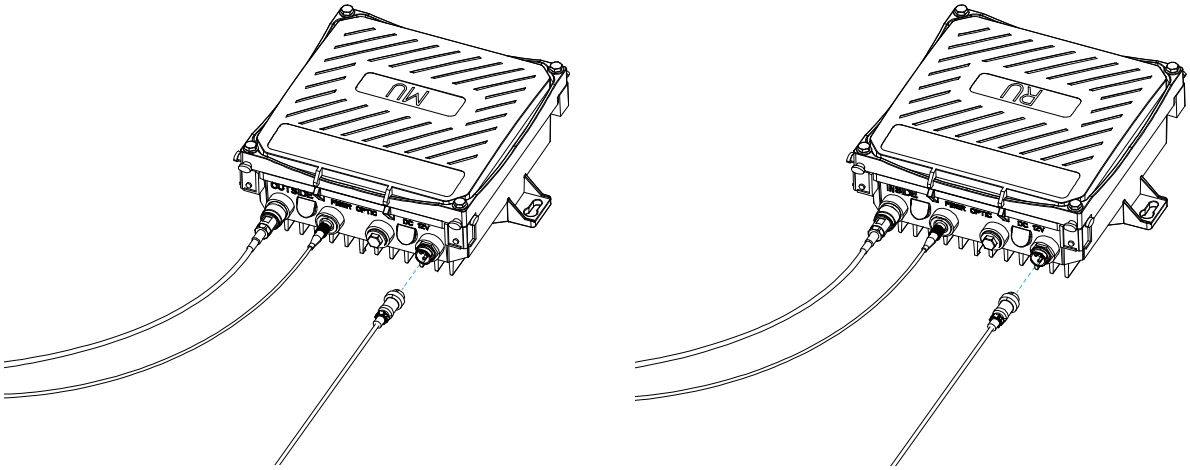

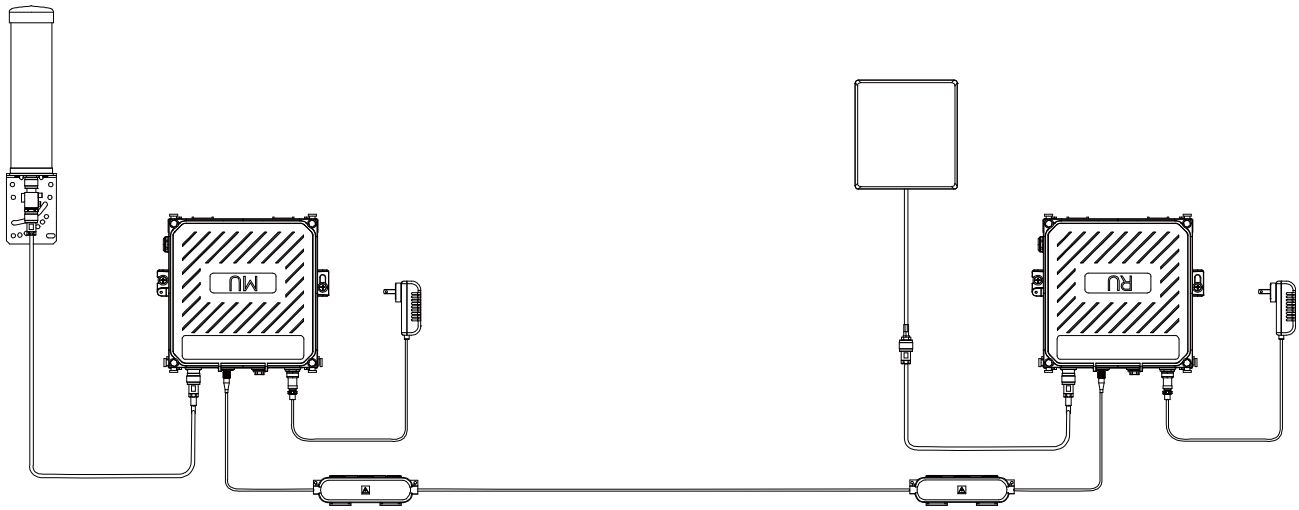

Measuring Booster Performance

How To Get Signal Strength As A Number

iPhone®

Dial *3001#12345#* then press Call.

1 Hold down power button until you see 'Slide to Power Off'.

2 Then release the power button.

3 Hold the Home button until your main screen appears.

If you want to check 3G/1x but your iPhone is picking up 4G/LTE signal, go to Settings>Cellular>Cellular Data Options>En_x0002_able .LTE>Select Off.

After you system is set up, you can go back to the dots signal by once again dialing *3001#12345#* then pressing call. When the menu comes back up, tap “phone” in the top left corner of your phone.

iPhone®
iOS 11 - current

iOS 11 and later no longer displays the decibel (dBm) reading in 'Field Test Mode'. Tip: Using the dot signal strength indicator on your cell phone can assist you in finding the strongest signal direction as well as placing calls in different locations.

Android™

Settings > About Phone > Status or Network > Signal Strength or Network Type and Strength (exact options/wording depends on phone model).

Android: download third part APP-LTE Discovery

iPhone is a registered trademark of Apple Inc. Android is a trademark of Google Inc.

How To Confirm That Your Installation Is Correct And Effective?

Having an accurate measurement of signal strength in decibels (dBm) is crucial when installing your system. Decibels accurately measure the signal strength you are receiving.

(MEASURING BOOSTER PERFORMANCE cont.)

Signal strength at 6 feet from inside antenna

Note here: _____ dBm

Signal strength at 6 feet from outside antenna

Note here: _____ dBm

Compare Results

If the signal strength in decibels (dBm) at 6 feet from the indoor antenna is 15-20dB higher than the signal strength at 6 feet from the outdoor antenna, then your system has achieved the optimum results. Note: Since it is a negative number, the smaller the number, the greater the signal strength.

DID YOU KNOW a signal increase of just 3dB is 2 times the power and signal amplification!

Safety Guidelines

To uphold compliance with network protection standards, all active cellular devices must maintain at least six feet of separation distance from inside unit antenna and outside unit antenna and at least four feet of separation distance from inside unit.

Use only the power supply provided in this package. Use of a non-FOBOOST product may damage your equipment.

The Signal Booster unit is designed for use in an indoor, temperature-controlled environment (less than 100 degrees Fahrenheit). It is not intended for use in attics or similar locations subject to temperatures in excess of that range.

RF Safety Warning: Any antenna used with this device must be located at least 8 inches from all persons.

This is a CONSUMER device

BEFORE USE, you **MUST REGISTER THIS DEVICE** with your wireless provider and have your provider's consent .Most wireless provider consent to the use of signal boosters .Some providers may not consent to the use of this device on their network .If you are unsure ,contact your provider.
In Canada,**BEFORE USE** you must meet all requirement set out ISED CPC-2-1-05.
You **MUST** operate this device with approved antenna and cables as specified by the manufacturer .Antennas **MUST** be installed at least 20cm (8inches) from(i.e.,**MUST NOT** be installed within 20 cm of) any person.
You **MUST** cease operating this device immediately if requested by the FCC(or ISED in Canada) or a licensed wireless service provider.
WARNING.E911 location information may not be provided or may be inaccurate for calls served by using this device.
This device may be operated ONLY in a fixed location(i.e.,may operae in a fixed location only) for in-building use.

FOR MORE INFORMATION ON REGISTERING YOUR SIGNAL BOOSTER WITH YOUR WIRELESS PROVIDER, PLEASE SEE BELOW:

Sprint:	http://www.sprint.com/legal/fcc_boosters.html
T-Mobile/MetroPCS:	https://support.t-mobile.com/docs/DOC-9827
Verizon Wireless:	http://www.verizonwireless.com/wcms/consumer/register-signal-booster.html
AT&T:	https://securec45.securewebsession.com/attsignalbooster.com/
U.S. Cellular:	http://www.uscellular.com/uscellular/support/fcc-booster-registration.jsp

Specifications

Model Number	Fiber-Optical Booster				
FCC					
Connectors	F-Female on the inside Antenna / F-Female on the Outside Antenna				
Noise figure	5 dB nominal				
Antenna Impedance	75 Ohms / 75 Ohms				
Weight	2.3Kg				
Frequency(Uplink)	698-716MHz	776-787MHz	824-849MHz	1850-1915MHz	1710-1755MHz
Frequency Band	Band12	Band13	Band5	Band2	Band4
Gain(Max)	62	62	62	68	68
OutputPower（dBm）	17dBm~23dBm				
Frequency(Downlink)	728-746MHz	746-757MHz	869-894MHz	1930-1995MHz	2110-2155MHz
Frequency Band	Band12	Band13	Band5	Band2	Band4
Gain(Max)	62	62	62	71	71
OutputPower（dBm）	2dBm~8dBm				
EIRP	1W Max				
Operating temperature	5℉ to 140℉ (-15℃~60 ℃)				
Isolation	>110 dB				
Power Requirements	AC / DC 12V,1.5A, w/3 pin aviation connector				

This device complies with Part 15 of FCC rules. Operation is subject to two conditions: (1) This device may not cause harmful interference, and (2) this device must accept any interference received, including interference that may cause undesired operation. Changes or modifications not expressly approved by FOBOOST could void the authority to operate this equipment.

CPC-2-1-05 — Zone Enhancers - Spectrum management and telecommunications

http://www.ic.gc.ca/eic/site/smt-gst.nsf/eng/sf08942.html

Warning:Unauthorized antennas/cables and/or coupling devices are prohibited by FCC rules. Please contact FCC for details: 1-888-CALL-FCC

NEED HELP ?

fddiboost@163.com

(EN) This device complies with Industry Canada license-exempt RSS standard(s). Operation is subject to the following two conditions: (1) this device may not cause interference, and (2) this device must accept any interference, including interference that may cause undesired operation of the device.
(FR) Le présent appareil est conforme aux CNR d'Industrie Canada applicables aux appareils radio dispense de permis. L'exploitation est autorisée aux deux conditions suivantes : (1) l'appareil ne doit pas produire de brouillage, et (2) l'utilisateur de l'appareil doit accepter tout brouillge radioelectrique subi, meme si le brouillge est susceptible d'en compromettre le fonctionnement.

Booster transmitting in 1710-1755 MHz should be install/operate in one of two ways:
(i) the antenna for the device must be installed to comply with the 10 meter above ground maximum antenna height limitation OR
(ii) the antenna for the device has a 10 meter above ground maximum antenna height limitation when the device is used with a handset that covers the 1710-1755 MHz band

3 YEAR WARRANTY

The Booster is covered under a three-year product warranty for failures or defects that result from craftsmanship and/or materials. Dated proof of purchase should be retained for use in warranty cases. Contact the retailer/reseller directly with any warranty issues, or alternatively contact the manufacturer in cases where the reseller is no longer available to handle warranty claims. In cases where the reseller is unavailable, the product may be returned to the manufacturer at the consumer's expense, with a dated proof of purchase and a return authorization letter which can be attained by contacting FOBOOST.

This warranty does not apply to any signal booster components determined by FOBOOST to have been subjected to misuse, abuse, neglect, tampering, or mishandling that result in damages to the physical or electronic properties of the product. Refurbished products that have been recertified to conform to product specifications may be used for product replacements.

DISCLAIMER: The information provided by FOBOOST is believed to be complete and accurate, to the best of our knowledge. However, no responsibility is assumed by FOBOOST for any business or personal losses arising from the use of the information herein contained, or for any infringements of patents or other rights of third parties that may result from its use.

NEED HELP ?

fddiboost@163.com

Antenna Kitting Information

Component	Type specification	Gain/Loss					Manufacturer
		LTE-707	LTE-781	800MHz	1900MHz	1700MHz\2100MHz	
Outside Cable	RG6FF 30Feet	1.5dB	1.6dB	1.7dB	2.6dB	2.2dB\2.8dB	Suirongcable
Outside Cable	SRLMR400-75NN	1.7dB	1.7dB	1.8dB	2.4dB	2.3dB\2.6dB	Suirongcable
Outside Cable	LMR240 30Feet	2dB	2.1dB	2.2dB	3.3dB	3.3\3.5 dB	Suirongcable
Inside Cable	SRLMR400-30NN	1.9dB	1.9dB	1.95dB	2.9dB	2.55dB\2.9dB	Suirongcable
Inside Cable	RG6FF 45Feet	2.2dB	2.3dB	2.5 dB	3.8 dB	3.3 dB\4.2dB	Suirongcable
Inside Cable	LMR240 30Feet	2dB	2.1dB	2.2dB	3.3dB	3.3\3.5 dB	Suirongcable
Inside Cable	LMR240 90Feet	5.85dB	6.3 dB	6.75 dB	9.9 dB	9.9dB\10.35dB	Suirongcable
Inside Cable	LMR240 60Feet	3.9dB	4.2dB	4.5dB	6.6dB	6.6 dB\6.9 dB	Suirongcable
Inside Cable	LMR240 45Feet	2.9dB	3.15dB	3.38dB	4.87dB	4.87dB\5.2dB	Suirongcable
Inside Cable	SRLMR400-30NN	1.9dB	1.9dB	1.95dB	2.9dB	2.55dB\2.9dB	Suirongcable
Inside Cable	SRG58-30FN 30Feet	4.5dB	4.5dB	4.9dB	7.6dB	7.2dB\8dB	Suirongcable
Inside Cable	SRLMR400-20NN	1.3dB	1.3dB	1.35dB	1.8dB	1.8dB\1.9dB	Suirongcable
Inside Cable	SRG58-15FN 15Feet	2.35dB	2.4dB	2.56dB	3.9dB	3.7dB\ 4.1dB	Suirongcable
Inside Cable	SRLMR400-30NN	1.9dB	1.9dB	1.95dB	2.8dB	2.55dB\2.9dB	Suirongcable
Outside Antenna	HYT050701	7dBi	7dBi	7dBi	10dBi	10dBi\10dBi	Shenzhen Langsheng Hengchi Trading Co., LTD
Outside Antenna	HYT010901	9dBi	9dBi	9dBi	9dBi	9dBi	Shenzhen Langsheng Hengchi Trading Co., LTD
Outside Antenna	HYT010701	9dBi	9dBi	9dBi	9dBi	9dBi	Shenzhen Langsheng Hengchi Trading Co., LTD
Outside Antenna	HYT060302	3dBi	3dBi	3dBi	3.5dBi	3.5dBi\3.5dBi	Shenzhen Langsheng Hengchi Trading Co., LTD
Outside Antenna	HYT030301	3dBi	3dBi	3dBi	3dBi	3dBi	Shenzhen Langsheng Hengchi Trading Co., LTD
Inside Antenna	HYT060302	3dBi	3dBi	3dBi	3.5dBi	3.5dBi\3.5dBi	Shenzhen Langsheng Hengchi Trading Co., LTD
Inside Antenna	HYT040301	3dBi	3dBi	3dBi	3dBi	3dBi	Shenzhen Langsheng Hengchi Trading Co., LTD
Inside Antenna	HYT080301	3dBi	3dBi	3dBi	3dBi	3dBi	Shenzhen Langsheng Hengchi Trading Co., LTD
Inside Antenna	HYT080302	3dBi	3dBi	3dBi	3dBi	3dBi	Shenzhen Langsheng Hengchi Trading Co., LTD
Inside Antenna	HYT080303	3dBi	3dBi	3dBi	3dBi	3dBi	Shenzhen Langsheng Hengchi Trading Co., LTD
Inside Antenna	HYT060301	3dBi	3dBi	3dBi	3dBi	3dBi	Shenzhen Langsheng Hengchi Trading Co., LTD
Inside Antenna	HYT060303	3dBi	3dBi	3dBi	3dBi	3dBi	Shenzhen Langsheng Hengchi Trading Co., LTD
Inside Antenna	HYT070101	1dBi	1dBi	1dBi	1dBi	1dBi	Shenzhen Langsheng Hengchi Trading Co., LTD
Inside Antenna	HYT21300100	3dBi	3dBi	3dBi	3.5dBi	3.5dBi\3.5dBi	Shenzhen Langsheng Hengchi Trading Co., LTD
Lightning Protector	ACC010101	0.1 dB	0.1 dB	0.1 dB	0.18dB	0.16dB\0.2dB	Shenzhen Langsheng Hengchi Trading Co., LTD
All equivalent antennas and cables are suitable for use with the Fddiboost or Foboost booster.							

Default combination:

HYT050701 + LMR240 30Feet +FB20221001+ LMR240 30Feet+HYT080301
HYT050701 + LMR240 30Feet +FB20221002+ LMR240 30Feet+HYT080301
HYT050701 + LMR240 30Feet +FB20221003+ LMR240 30Feet+HYT080301

Notes

FOBOOST

fddiboost@163.com

3-year manufacturer‘s warranty

NEED HELP ? fddiboost@163.com