Shenzhen tianxia technology co.,ltd
Specification

Document number		name	Bonding mode of wireless charging and transmitting transparent module
Product size	Φ 40*Φ 5*H2.5	Bonding mode	Hot air self-adhesive

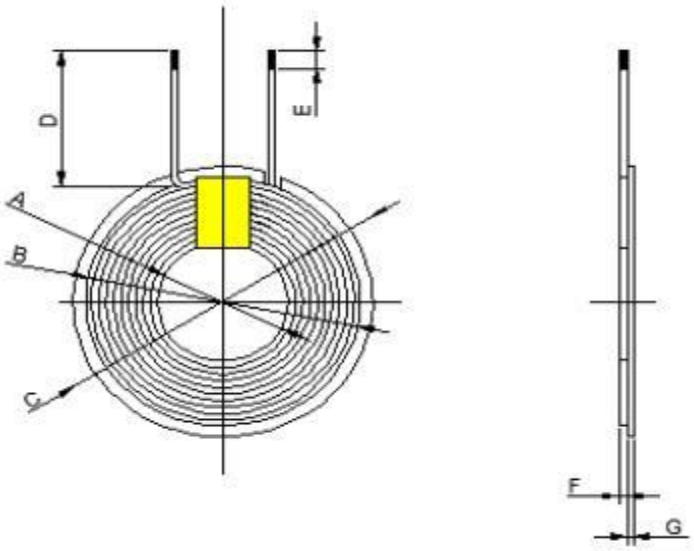

A	20.5±0.5
B	39.0±1.0
C	40.0±0.5
D	28±2
E	4M AX
F	1.1±0.1
G	1.3±0.1
H	2.5±0.1
unit: MM	

	0.08*80 strands of hot air line	Winding mode	Single-wire winding type	remarks	Coil is counterclock wise direction
	11 Ts				
	Φ 40*Φ 5*0.6		6.5±10%		
	Φ 39.0*20.5	Test frequency			Test mode

Opinion table

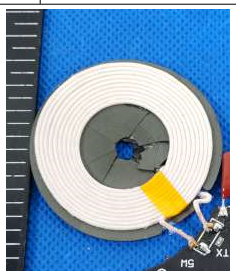

Draw up of from	ZhangYan	check	LuoYongjun	confirm	LuoYongjun	date	20221104