Prüfbericht-Nr.: *Test report no.:*	**SE2354A1-003**	**Auftrags-Nr.:** *Order no.:*	0290100214	Seite 1 von 38 *Page 1 of 38*
Kunden-Referenz-Nr.: *Client reference no.:*	2458172	**Auftragsdatum:** *Order date:*	2022.09.29	
Auftraggeber: *Client:*	Nomono AS			
Prüfgegenstand: *Test item:*	Central hub of recording device			
Bezeichnung / Typ-Nr.: *Identification / Type no.:*	Space Recorder / FCC ID: 2A9CX-REC1			
Auftrags-Inhalt: *Order content:*	Accredited Testing			
Prüfgrundlage: *Test specification:*	FCC 47 CFR Part 15.247 with parts 15.207 & 15.209 ANSI C63.10: 2013			
Wareneingangsdatum: *Date of sample receipt:*	2022.11.09			
Prüfmuster-Nr.: *Test sample no:*	See section 2.3			
Prüfzeitraum: *Testing period:*	2023.03.28 - 2023.03.31			
Ort der Prüfung: *Place of testing:*	Lund, Sweden			
Prüflaboratorium: *Testing laboratory:*	TÜV Rheinland Sweden			
Prüfergebnis*: *Test result*:*	Pass			
überprüft von: reviewed by:	X Signed by: Niall Forrester	**genehmigt von:** authorized by:	X Signed by: Hakan Ahlberg	
Datum: 2023.05.17 *Date:*		**Datum: 2023.05.17** *Date:*		
Stellung / *Position:*	Senior Technical Expert	**Stellung** / *Position:*	Lab Manager	
Sonstiges / *Other:*	This report covers additional testing to check emissions with multiple transmitters active and potential intermodulation products at the 2.4GHz band edges The device contains multiple radio transmitters. Please see section 2.1 for details and section 3.7 for notes about the configurations tested.			
Zustand des Prüfgegenstandes bei Anlieferung: *Condition of the test item at delivery:*	Prüfmuster vollständig und unbeschädigt *Test item complete and undamaged*			

* Legende:	1 = sehr gut	2 = gut	3 = befriedigend	4 = ausreichend	5 = mangelhaft
	P(ass) = entspricht o.g. Prüfgrundlage(n)		F(ail) = entspricht nicht o.g. Prüfgrundlage(n)	N/A = nicht anwendbar	N/T = nicht getestet
** Legend:*	*1 = very good*	*2 = good*	*3 = satisfactory*	*4 = sufficient*	*5 = poor*
	P(ass) = passed a.m. test specification(s)		*F(ail) = failed a.m. test specification(s)*	*N/A = not applicable*	*N/T = not tested*

Dieser Prüfbericht bezieht sich nur auf das o.g. Prüfmuster und darf ohne Genehmigung der Prüfstelle nicht auszugsweise vervielfältigt werden. Dieser Bericht berechtigt nicht zur Verwendung eines Prüfzeichens.
This test report only relates to the a. m. test sample. Without permission of the test center this test report is not permitted to be duplicated in extracts.

V05

Revision History

REVISION	DATE	REMARKS	AUTHOR
001	2023.04.19	First release	Niall Forrester
002	2023.04.21	Corrected error in wireless frequencies	Niall Forrester
003	2023.05.17	Updated module text	Niall Forrester
Note: Latest revision report will replace all previous reports			
This report based on FCC Part 15.247 Template version 1.3			

Summary of Test Results

FCC 47 CFR Rule Part	Test Description	Applicability	Report Section	RESULT	REMARKS
15.207	AC Power Line Conducted Emissions (Intentional Radiators)	YES	4.1	PASS	
15.209	Radiated Emissions (Intentional Radiators)	YES	4.2	PASS	
15.247 (d)	Antenna Conducted Emissions	NO	4.3	N/A	* See note 1
15.247 (d)	Band Edge Compliance (Authorized Band)	NO	4.4	N/A	* See note 1
15.247 (d)	Band Edge Compliance (Restricted Band)	YES	4.5	PASS	
15.247 (a)(1)	20dB Bandwidth	NO	4.6	N/A	* See note 1
15.247 (a)(1)	Carrier (Hopping Channel) Separation	NO	4.7	N/A	* See note 1
15.247 (a)(1)	Number of Hopping Channels	NO	4.8	N/A	* See note 1
15.247 (a)(1)	Time of Occupancy (Dwell Time)	NO	4.9	N/A	* See note 1
15.247 (a)(2)	6dB Bandwidth	NO	4.10	N/A	* See note 1
15.247 (b)	Peak Conducted Output Power	NO	4.11	N/A	* See note 1
15.247 (e)	Power Spectral Density	NO	4.12	N/A	* See note 1

Possible test case verdicts:

- Test case does not apply to the test object: N/A
- Test object complies with the requirement: PASS or COMPLIANT
- Test object does not meet the requirement: FAIL or NOT COMPLIANT
- Test case not performed on the test object: N.P.

Note 1: This report covers additional testing to check emissions with multiple transmitters active and potential intermodulation products at the 2.4GHz band edges. As such, only a subset of tests has been applied. See section 3.7 for further detail.

Table of Contents

1. GENERAL INFORMATION 4
1.1 Test Site 4
1.2 Client Information 4
2. PRODUCT INFORMATION 5
2.1 General Description 5
2.2 Device Characteristics 5
2.3 Test Samples 6
2.4 Wireless Technologies and Bands Supported by the EUT 6
2.5 Antenna Information 7
2.6 Simultaneous Transmission Capabilities 7
2.7 Wireless Technology Details 8
2.8 Ancillary Equipment 8
2.9 EUT Diagrams 8
3. TEST METHODS 9
3.1 Test Standards 9
3.2 Additional references 9
3.3 Limits 10
3.4 Description of Test Methods and Equipment Setup 11
3.5 EUT Configuration During Test 15
3.6 EUT Operation Modes 16
3.7 Deviations from the Test Standard 17
3.8 Environmental Conditions 18
4. TEST RESULTS 19
4.1 Test Results – AC Power Line Conducted Emissions (Intentional Transmitter) 19
4.2 Test Results – Radiated Emissions (Intentional Transmitter) 21
4.3 Test Results – Antenna Conducted Emissions 31
4.4 Test Results – Band Edge Compliance (Authorized Band) 31
4.5 Test Results – Band Edge Compliance (Restricted Band) 31
4.6 Test Results – 20dB Bandwidth 36
4.7 Test Results – Carrier (Hopping Channel) Separation 36
4.8 Test Results – Number of Hopping Channels 36
4.9 Test Results – Time of Occupancy (Dwell Time) 36
4.10 Test Results – 6dB Bandwidth 36
4.11 Test Results – Peak Conducted Output Power 36
4.12 Test Results – Power Spectral Density 36
5. TEST EQUIPMENT STATUS 37
5.1 List of Hardware with Calibration Dates 37
5.2 Software / Firmware Versions 38
6. MEASUREMENT UNCERTAINTY 38
6.1 Measurement Uncertainty for Conducted Emissions 38
6.2 Measurement Uncertainty for SAC 5 (Radiated Emissions & Band Edge) 38
7. PHOTOGRAPHS 38

1. GENERAL INFORMATION

1.1 Test Site

Test Facility:	**TÜV Rheinland Sweden AB**
Address:	**Mobilvägen 10**
	223 62 Lund
	Sweden
Swedac Registration Number: **FCC Test Firm Registration Number:** **ISED Test Site Registration Number:**	**10325** **517458** **24753**

1.2 Client Information

Company Name:	**Nomono AS**
Address:	**Strandveien 43**
	7067 Trondheim
	Norway
Contact Person:	**Kristine Snyder / Sindre Georgsen**
Contact e-Mail / Telephone	**compliance@nomono.co** **+47 40 44 00 40 / +47 93 42 48 42**

2. PRODUCT INFORMATION

2.1 General Description

Model name:	Space Recorder
Manufacturer:	Nomono
Model number / Marketing name:	Space Recorder
FCC ID:	2A9CX-REC1
Description:	Central hub of recording device
Ancillary Equipment:	See section 2.8

The device incorporates five separate radio transmitters:

A “Main” module for WLAN 2.4 GHz 802.11 b/g/n, WLAN 5GHz 802.11 a/n/ac and Bluetooth Low Energy. This module uses its own SMT antenna

4 x “Microphone” modules (labelled “Tx0” “Tx3” below) for communicating with a wireless microphone via Bluetooth Low Energy. Each of these modules is connected to its own PCB antenna

2.2 Device Characteristics

Device Class for 47 CFR Part 15 B	Class B
Type of Power Supply	Internal battery Charging via dedicated charging base or Charging via USB C (No dedicated AC/DC adapter supplied with device)
Nominal Supply Voltage	3.6V DC (Battery) 5.0V DC (From charging base) 5.0V DC (USB)
Supply Voltage Range	2.75V – 4.2V (Battery) 4.9V – 5.1V (From charging base) 5.0V – 12.0V DC (USB)
Operating Temperature Range	0 to 45 °C
Operating Air Humidity Range	-
Highest Internal Frequency Source	5825 MHz

2.3 Test Samples

EUT #	EUT ID	Description	Used For:
1	A003438513-006	Standard Sample Hardware: 830-00010 rev. 1 Firmware: nRF radio: v0.8.0 CPU: v0.6.1	AC Conducted Emissions Radiated Emissions Band Edges / Intermodulation

2.4 Wireless Technologies and Bands Supported by the EUT

Technology	Band	Frequency Range (Tx)	Evaluation Performed*
WLAN 802.11b/g/n (Main)	2.4 GHz	2412 MHz - 2462 MHz	YES
WLAN 802.11a/n/ac (Main)	5 GHz	5180 MHz – 5825 MHz	YES
Bluetooth Low Energy (Main)	2.4 GHz	2402 MHz - 2480 MHz	NO (See section 3.7)
Bluetooth Low Energy (Microphone Tx0)	2.4 GHz	2402 MHz - 2480 MHz	YES
Bluetooth Low Energy (Microphone Tx1)	2.4 GHz	2402 MHz - 2480 MHz	YES
Bluetooth Low Energy (Microphone Tx2)	2.4 GHz	2402 MHz - 2480 MHz	YES
Bluetooth Low Energy (Microphone Tx3)	2.4 GHz	2402 MHz - 2480 MHz	YES

*This statement refers only to this report. Other wireless technologies may be covered by other reports.

(Note that other parts of the recording system contain additional wireless transmitters have been tested separately)

2.5 Antenna Information

Technology	Band	Number of Antennas	Antenna Type(s)	Gain (dBi)
WLAN 802.11b/g/n (Main) & Bluetooth Low Energy (Main)	2.4 GHz	1	SMT Chip Antenna	4.20
WLAN 802.11a/n/ac (Main)	5 GHz	1	SMT Chip Antenna	4.50
Bluetooth Low Energy (Microphone Tx0)	2.4 GHz	1	PCB Antenna	2.05
Bluetooth Low Energy (Microphone Tx1)	2.4 GHz	1	PCB Antenna	1.99
Bluetooth Low Energy (Microphone Tx2)	2.4 GHz	1	PCB Antenna	2.58
Bluetooth Low Energy (Microphone Tx3)	2.4 GHz	1	PCB Antenna	1.16

2.6 Simultaneous Transmission Capabilities

Active Technologies	Bands	Active Modules
WLAN 802.11 b/g/n BlueTooth Low Energy BlueTooth Low Energy BlueTooth Low Energy BlueTooth Low Energy (All active simultaneously)	2.4 GHz 2.4 GHz 2.4 GHz 2.4 GHz 2.4 GHz	Main Microphone Tx0 Microphone Tx1 Microphone Tx2 Microphone Tx3 (All active simultaneously)
BlueTooth Low Energy BlueTooth Low Energy BlueTooth Low Energy BlueTooth Low Energy BlueTooth Low Energy (All active simultaneously)	2.4 GHz 2.4 GHz 2.4 GHz 2.4 GHz 2.4 GHz	Main Microphone Tx0 Microphone Tx1 Microphone Tx2 Microphone Tx3 (All active simultaneously)
WLAN 802.11 a/n/ac BlueTooth Low Energy BlueTooth Low Energy BlueTooth Low Energy BlueTooth Low Energy (All active simultaneously)	5 GHz 2.4 GHz 2.4 GHz 2.4 GHz 2.4 GHz	Main Microphone Tx0 Microphone Tx1 Microphone Tx2 Microphone Tx3 (All active simultaneously)

The configurations listed above represent the worst cases. Variations of these configurations where one or more radio transmitters is not active are also possible. The “Microphone” modules operate independent of each other and independent of the “Main” module. The “Main” module is not capable of transmitting WLAN 2.4GHz and WLAN 5GHz simultaneously, neither can it transmit Bluetooth Low Energy and WLAN simultaneously.

2.7 Wireless Technology Details

Technology	Band	Modulation Type(s)	No. of Channels	Channel Spacing	Adaptivity
WLAN 802.11b/g/n (Main)	2.4 GHz	CCK, BPSK, QPSK, 16-QAM, 64-QAM	As per 802.11 Spec	As per 802.11 Spec	N/A
WLAN 802.11a/n/ac (Main)	5 GHz	CCK, BPSK, QPSK, 16-QAM, 64-QAM	As per 802.11 Spec	As per 802.11 Spec	N/A
Bluetooth Low Energy (Main)	2.4 GHz	GFSK	40	2 MHz	N/A
Bluetooth Low Energy (Microphone Tx0)	2.4 GHz	GFSK	40	2 MHz	N/A
Bluetooth Low Energy (Microphone Tx1)	2.4 GHz	GFSK	40	2 MHz	N/A
Bluetooth Low Energy (Microphone Tx2)	2.4 GHz	GFSK	40	2 MHz	N/A
Bluetooth Low Energy (Microphone Tx3)	2.4 GHz	GFSK	40	2 MHz	N/A

2.8 Ancillary Equipment

ID	Description	Manufacturer / Model	Hardware & Software Versions
A003389898-003	USB Charger	Samsung EP-T4510	HW: 13.08.2022 FW: N/A

2.9 EUT Diagrams

-

3. TEST METHODS

3.1 Test Standards

Testing was performed according to the following standards / references

Standard	Version	Description
FCC 47 CFR 15.247	-	Operation within the bands 902-928 MHz, 2400-2483.5 MHz, and 5725-5850 MHz.
FCC 47 CFR 15.207	-	Conducted limits
FCC 47 CFR 15.209	-	Radiated emission limits; general requirements

3.2 Additional references

The following standards / references were also considered for the testing

Standard	Version	Description
ANSI C63.10	2013	American National Standard of Procedures for Compliance Testing of Unlicensed Wireless Devices

3.3 Limits

FCC 47 CFR Rule Part	Test Description	Limit Reference (FCC 47 CFR Reference)
15.207	AC Power Line Conducted Emissions (Intentional Radiators)	15.207 (a)
15.209	Radiated Emissions (Intentional Radiators)	15.209 (a) *See Note 1
15.247 (d)	Antenna Conducted Emissions	N/A
15.247 (d)	Band Edge Compliance (Authorized Band)	N/A
15.247 (d)	Band Edge Compliance (Restricted Band)	15.247 (d)
15.247 (a)(1)	20dB Bandwidth	N/A
15.247 (a)(1)	Carrier (Hopping Channel) Separation	N/A
15.247 (a)(1)	Number of Hopping Channels	N/A
15.247 (a)(1)	Time of Occupancy (Dwell Time)	N/A
15.247 (a)(2)	6dB Bandwidth	N/A
15.247 (b)	Peak Conducted Output Power	N/A
15.247 (e)	Power Spectral Density	N/A

Interpretation of the measurement results has been performed in accordance with ANSI C63.10 section 1.3

Compliance with the requirements has been based on the results of the measurements compared to the specified limits, not taking into account measurement instrumentation uncertainty.

Measurement Uncertainty figures are stated in section 6

Note 1

Radiated Emissions limits in the tables from 47 CFR sections 15.109 & 15.209 are presented in µV/m. Measurements on the test system are made in dBµV/m. To convert between these, the following adjustment is used:

$$New\ Limit = 20\log\left(\frac{Original\ Limit}{10^6}\right) + 120$$

Example: from 15.209(a) the limit for 30MHz – 88MHz is 100µV/m at 3m. This gives:

$$New\ Limit = 20\log\left(\frac{100}{10^6}\right) + 120 = 40\text{dBµV/m at 3m}$$

Additionally, in some cases testing has been performed at distances other than those specified in the tables. When this has occurred, the limits have been adjusted in accordance with the requirements in 47 CFR 15.31, using an extrapolation factor of 40dB/decade at frequencies below 30MHz and 20dB/decade at or above 30MHz

Example: from 15.209(a) the limit for 1.705MHz – 30MHz is 30µV/m (=29.54 dBµV/m) at 30m

$$Limit@3m = Limit@30m + 40\log\left(\frac{30}{3}\right) \qquad = 29.54 + 40.00 = 69.54\ \text{dBµV/m at 3m}$$

Example: from 15.209(a) the limit for 1GHz – 18GHz is 500µV/m (=53.98 dBµV/m) at 3m

$$Limit@1m = Limit@3m + 20\log\left(\frac{3}{1}\right) \qquad = 53.98 + 9.54 = 63.52\ \text{dBµV/m at 1m}$$

3.4 Description of Test Methods and Equipment Setup

3.4.1 General Description

Testing was performed in accordance with the various requirements of ANSI C63.4 and ANSI C63.10. Any deviations from the test methods are described in section 0

Where different arrangements of equipment were used for different types of measurements, these are tabulated in section 3.4.2 and details of each arrangement are included in subsequent sections

3.4.2 Test Equipment Setup Used by Test Type

FCC 47 CFR Rule Part	Test Description	Test Equipment Used
15.207	AC Power Line Conducted Emissions (Intentional Radiators)	Conducted Emissions
15.209	Radiated Emissions (Intentional Radiators)	SAC5
15.247 (d)	Antenna Conducted Emissions	N/A
15.247 (d)	Band Edge Compliance (Authorized band)	N/A
15.247 (d)	Band Edge Compliance (Restricted band)	SAC 5
15.247 (a)(1)	20dB Bandwidth	N/A
15.247 (a)(1)	Carrier (Hopping Channel) Separation	N/A
15.247 (a)(1)	Number of Hopping Channels	N/A
15.247 (a)(1)	Time of Occupancy (Dwell Time)	N/A
15.247 (a)(2)	6dB Bandwidth	N/A
15.247 (b)	Peak Conducted Output Power	N/A
15.247 (e)	Power Spectral Density	N/A

3.4.3 Test Equipment Setup – Conducted Emissions

- The EUT was placed 0.4 meters from the conducting wall of the shielded room with EUT being connected to the power mains through a line impedance stabilization network (LISN). Other support units were connected to the power mains through another LISN. The LISNs provide 50Ω/ 50µH of coupling impedance for the measuring instrument.

- The lines of the power mains connected to the EUT were checked for maximum conducted interference.

- The frequency range from 150 kHz to 30 MHz was searched. Emission levels over 10 dB under the prescribed limits could not be reported.

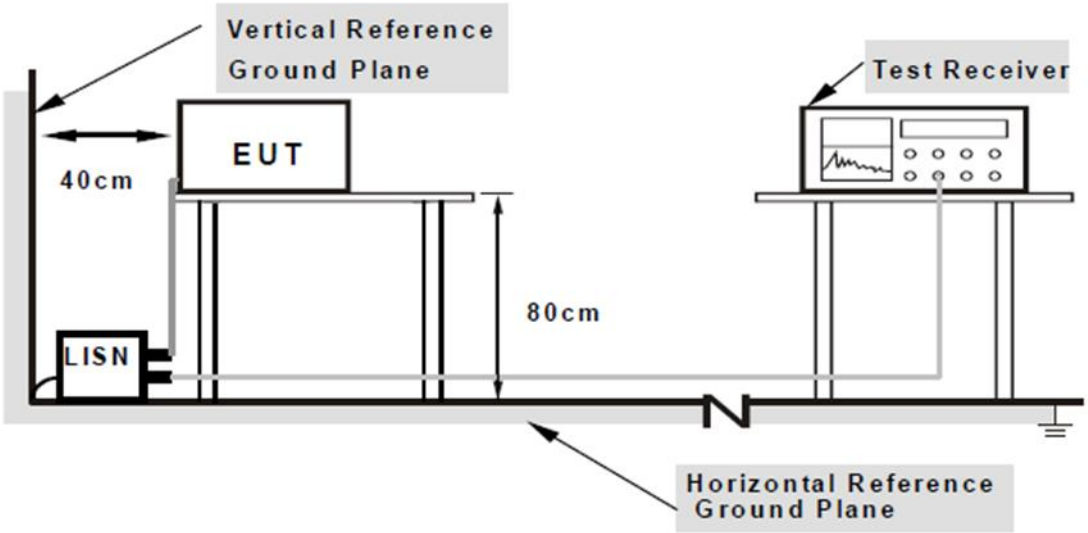

3.4.4 Test Equipment Setup – SAC 5 (Radiated Emissions and Restricted Band Edge)

- For frequency range 30MHz-1GHz Log-Periodic Antenna was used. Antenna elevated from 100 cm from floor to 400 cm from floor, and was placed at 3 m from center of turntable in tilted position. The equipment under test (EUT) was placed at the middle of the turntable at 80 cm height from floor. The antenna rotated to repeat the measurements for both the horizontal and vertical antenna polarizations. Repeat the measurement steps until the maximum emissions were obtained.

- For frequency range 1GHz-18GHz horn Antenna was used. Antenna elevated from 100 cm from floor to 200 cm from floor, and was placed at 3 m from center of turntable. The equipment under test (EUT) was placed at the middle of the turntable at 150 cm height from floor. The antenna rotated to repeat the measurements for both the horizontal and vertical antenna polarizations. Repeat the measurement steps until the maximum emissions were obtained.

- For frequency range 18GHz-40GHz double horn Antenna was used. Antenna's height was adjusted to150 cm from floor, and 1 m distance to center of turntable. The equipment under test (EUT) was placed at the middle of the turntable on at 150 cm height from floor.

- For all frequency ranges the turntable was rotated 360˚ for obtaining the maximum emission.

SAC 5 Test Setup Configuration 30MHz – 1GHz

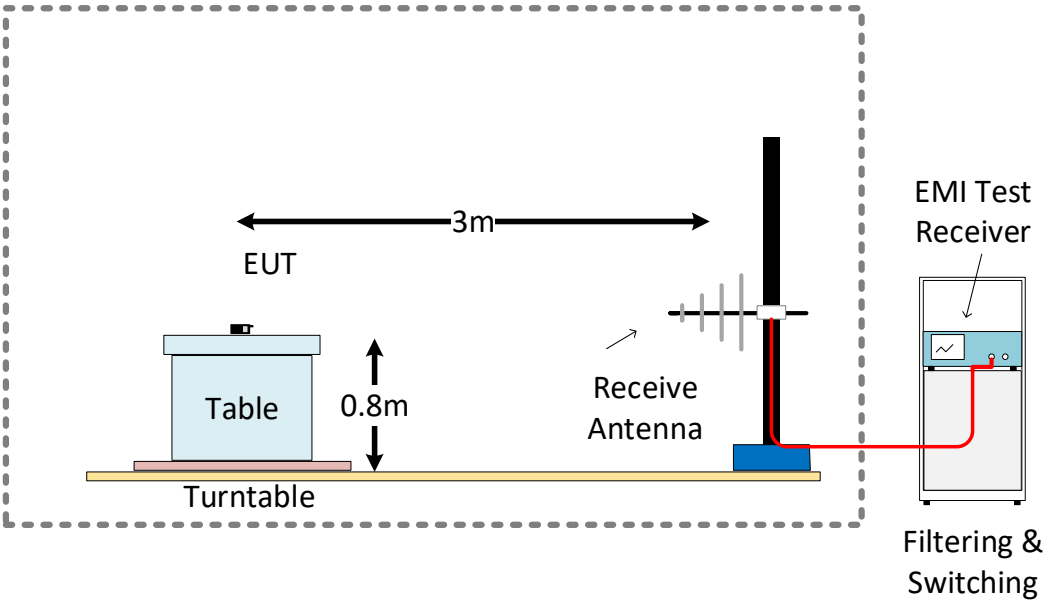

SAC 5 Test Setup Configuration 1GHz – 18GHz

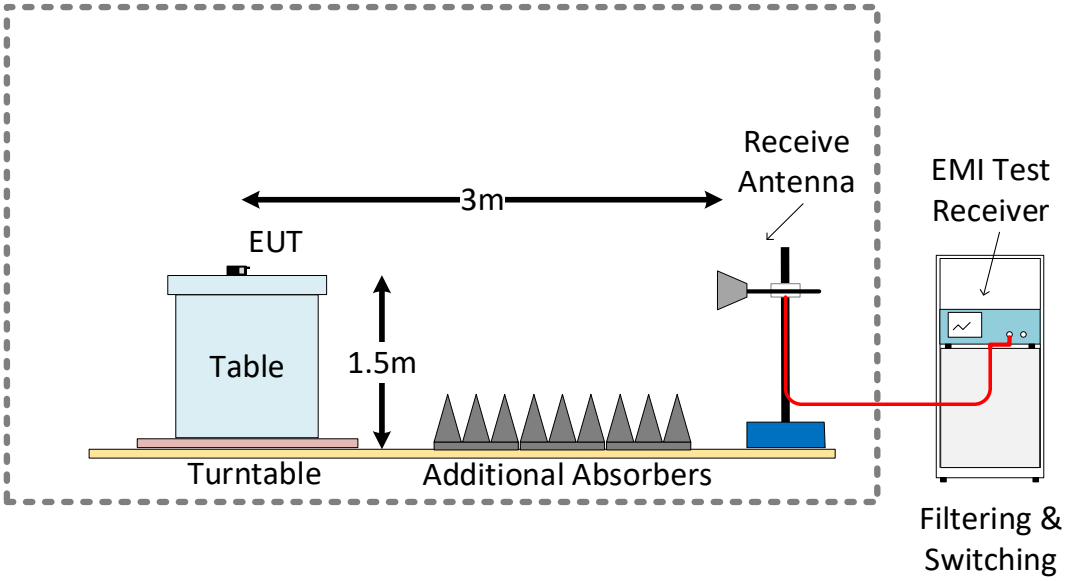

SAC 5 Test Setup Configuration 18GHz – 40GHz

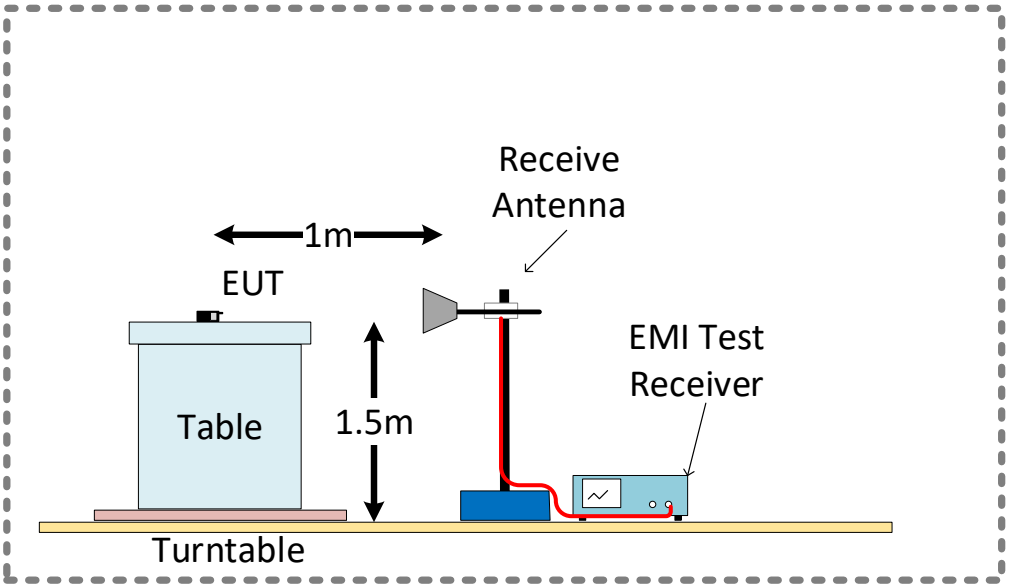

3.5 EUT Configuration During Test

AC Conducted Emissions Testing: Block Diagram (Stand-alone with charging)

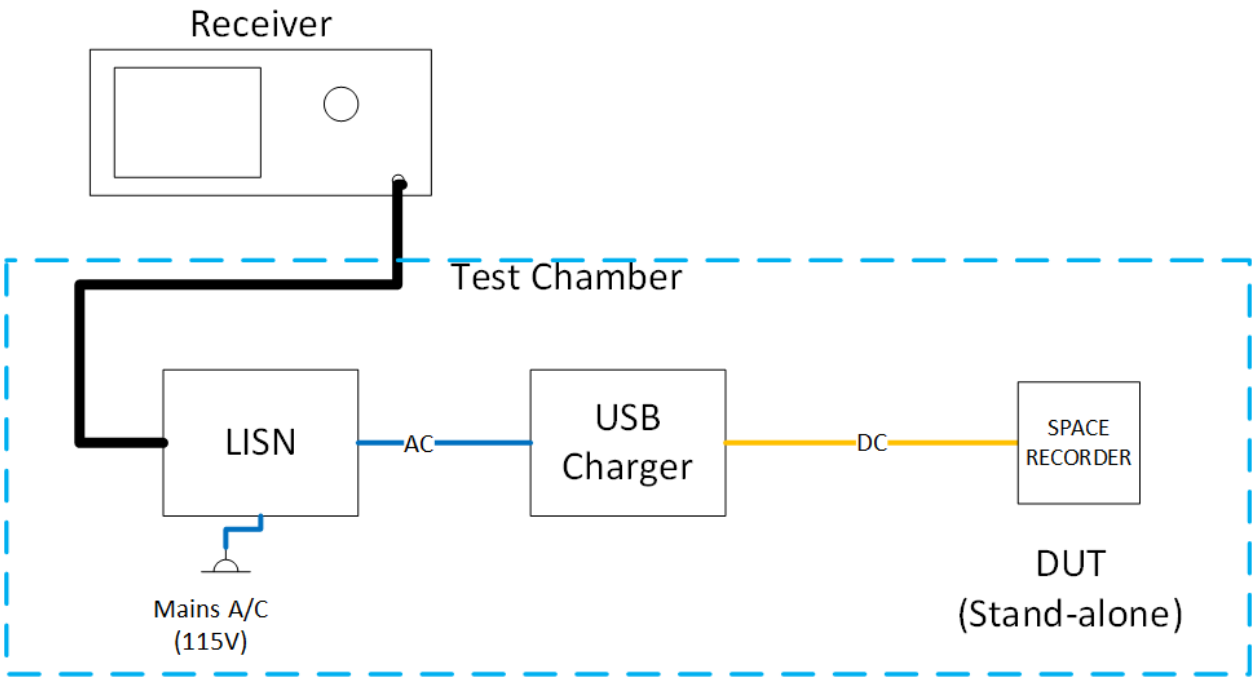

DUT = Space Recorder
Space Recorder charging direct from USB Charger

Radiated Emissions & Radiated RF Testing: Block Diagram (Stand-alone, no charging)

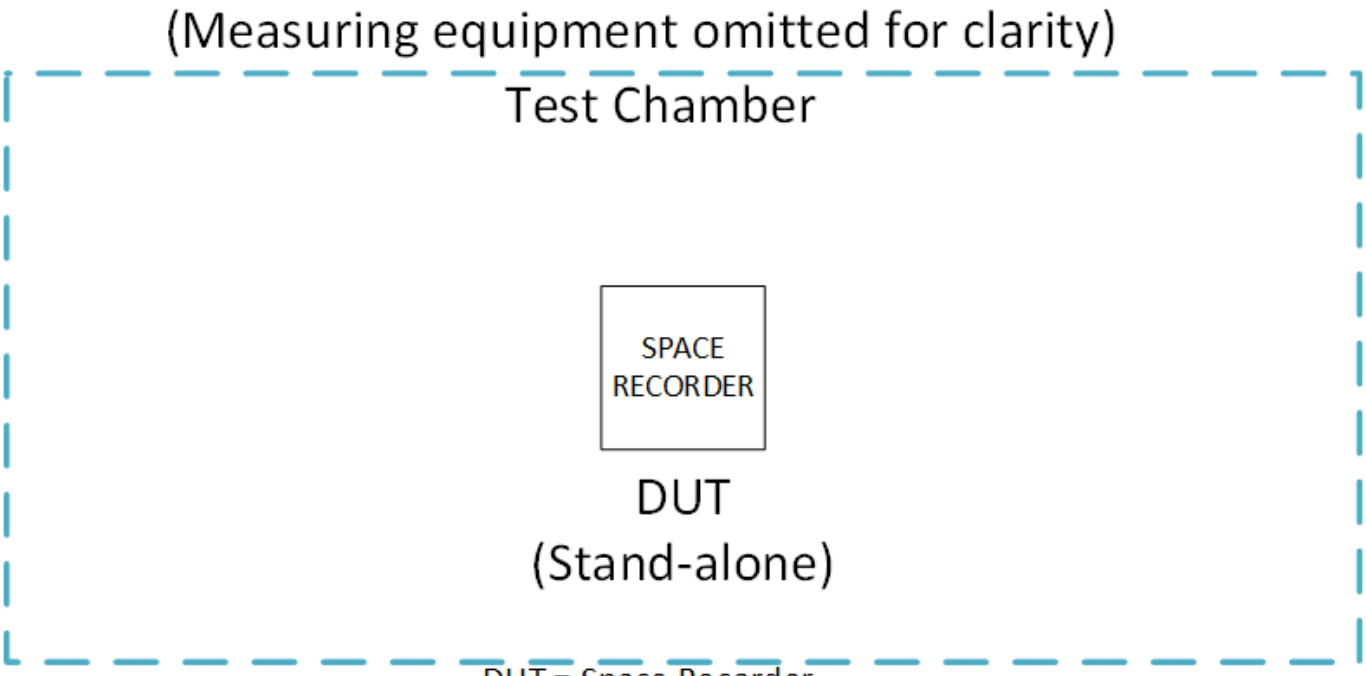

DUT = Space Recorder
No charging

3.6 EUT Operation Modes

Operation mode	Description
Rec – Charge - CTX	Space Recorder only in “stand-alone” configuration. Device charging via USB (not in charging base) Radio transmitter(s) in ‘continuous transmit’ mode – channel frequency and modulation can be set manually. Details about which transmitters, channels etc. listed under “Wireless Configuration”
Rec – No Chg - CTX	Space Recorder only in “stand-alone” configuration. Device not charging (neither base nor USB) – battery power only Radio transmitter(s) in ‘continuous transmit’ mode – channel frequency and modulation can be set manually. Details about which transmitters, channels etc. listed under “Wireless Configuration”

3.7 Deviations from the Test Standard

- This report covers additional testing to check emissions with multiple transmitters active and potential intermodulation products at the 2.4GHz band edges

  As such, only a subset of tests has been run for AC conducted emissions, radiated spurious emissions and testing at the band edges. The main testing with individual transmitters active is available in the respective reports

  Generally, the worst cases from individual transmitter testing have been combined for the radiated testing.

  Tests have been run using the 'framework' of FCC 47 CFR 15.247, with the limits from 15.207 and 15.209 for emissions

- AC Power Line emissions has been tested with one combination of WLAN 2.4GHz channel / mode / data rate (for Main) together with all four Microphone devices

- Radiated spurious emissions testing has been performed with combined worst-cases for WLAN (for Main) and Bluetooth Low Energy (all four Microphone devices). For frequencies above 1GHz, test have been performed for WLAN 2.4GHz + BLE and WLAN 5GHz + BLE.

  Whilst the "Main" module also supports Bluetooth Low Energy in addition to WLAN 2.4/5GHz, the output power of the BLE is lower than that of WLAN 2.4GHz, so simultaneous transmitter tests have been run using the worst case WLAN 2.4GHz configurations

- Additional tests have been performed at the ISM 2400 band edges with WLAN 2.4GHz (for "Main" module) active together with all four "Microphone" modules. In this case, multiple Bluetooth Low Energy channels that are close to each other have been chosen, to maximise the potential for intermodulation products between the various 2.4GHz transmitters.

- As defined in FCC 47 CFR Title 47 Part 15.35 (a), a peak detector has been used in place of the quasi-peak detector for measurements between 9kHz and 30MHz in order to reduce test time

3.8 Environmental Conditions

3.8.1 Environmental Conditions – Conducted Emissions System

Date	Time	Temperature (°C)	Relative Humidity (%)
2023.03.28	08:00	22.4	19

3.8.2 Environmental Conditions – SAC5 (Radiated Emissions)

Date	Time	Temperature (°C)	Relative Humidity (%)
2023.03.28	09:20	18.4	30
2023.03.29	08:00	18.2	29
2023.03.30	07:50	19.3	31
2023.03.31	08:35	18.2	37

4. TEST RESULTS

4.1 Test Results – AC Power Line Conducted Emissions (Intentional Transmitter)

4.1.1 AC Power Line Conducted Emissions (Intentional) – Test Summary

Test Specification	FCC 47 CFR 15.207 (Part 15 Subpart C)	
Test Engineer & Date	Sam Ebadeh	2023.03.28
EUT and Ancillary Equipment IDs	A003438513-006	A003389898-003
EUT Operation Mode(s)	Rec – Charge - CTX	
EUT Wireless Configuration(s)	Simultaneous Transmissions (see details below)	
EUT Hardware Configuration(s)	Stand-alone (Space Recorder)	
Overall Result	PASS	

Test Parameter	Wireless Configuration	Frequency Range	Result*
AC Conducted Power Line Emissions – “N” Line 115V / 60Hz	WLAN 802.11b 20MHz 11Mbps (Main) CH 1 (QPSK 2472 MHz) + Bluetooth Low Energy LE_2M (Microphone Tx0+Tx1+Tx2+Tx3) Low Channel (GFSK 2402 MHz)	150 kHz – 30 MHz	PASS
AC Conducted Power Line Emissions – “L1” Line 115V / 60Hz	WLAN 802.11b 20MHz 11Mbps (Main) CH 1 (QPSK 2472 MHz) + Bluetooth Low Energy LE_2M (Microphone Tx0+Tx1+Tx2+Tx3) Low Channel (GFSK 2402 MHz)	150 kHz – 30 MHz	PASS

* For detailed measurements, see tables and graphs in sections below

4.1.2 AC Power Line Conducted Emissions (Intentional) – Test Details: Stand-alone

Test mode condition	Conducted Emissions	
Sweep frequency	150 kHz – 30 MHz	
Standard	FCC 47 Part 15.207	
EUT	A003438513-006	
Ancillary Equipment	A003389898-003	
Test Engineer	Sam Ebadeh	Date: 2023.03.28

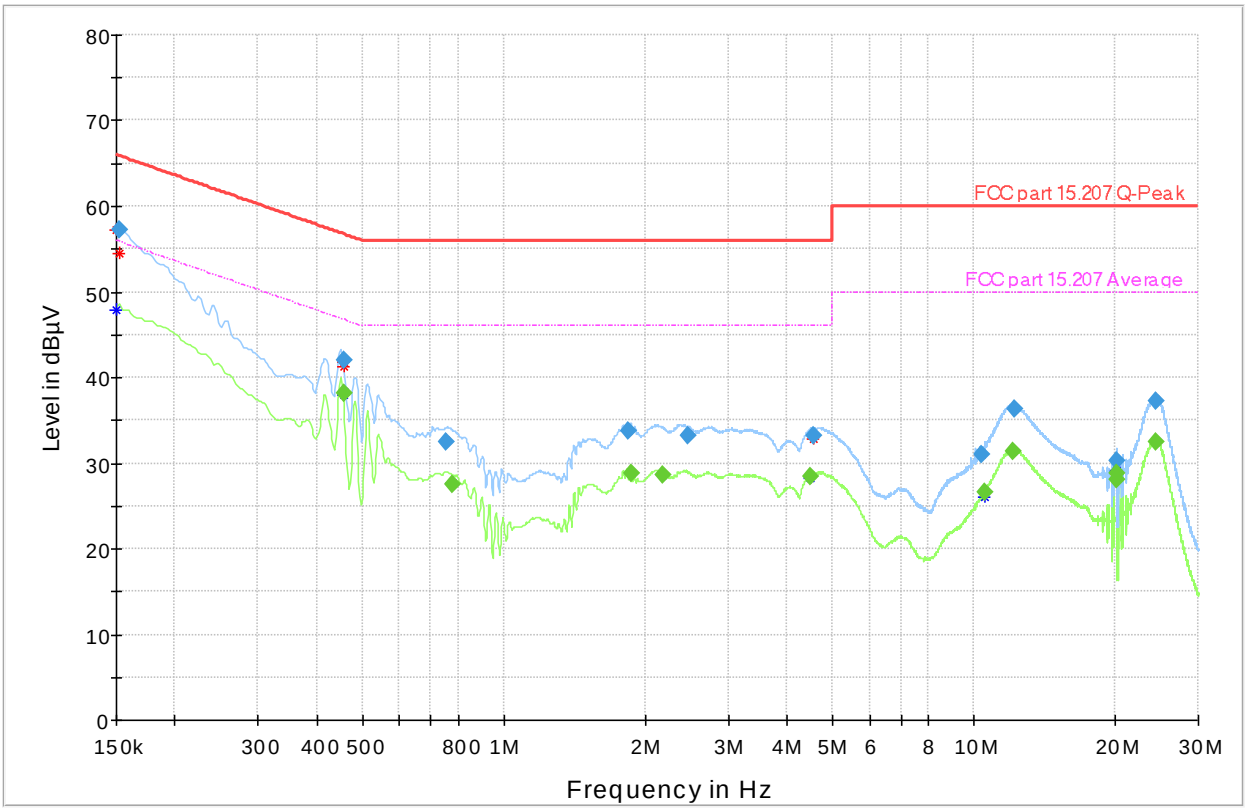

Preview Result 2-CAV
Critical_Freqs QPK
Final_Result QPK
Preview Result 1-QPK
FCC part 15.207 Q-Peak
Final_Result CAV
Critical_Freqs CAV
FCC part 15.207 Average

Frequency (MHz)	QuasiPeak (dBµV)	CAverage (dBµV)	Limit (dBµV)	Margin (dB)	Meas. Time (ms)	Bandwidth (kHz)	Line	Filter
0.152250	57.17	---	65.88	8.71	1000.0	9.000	N	ON
0.456000	42.08	---	56.77	14.69	1000.0	9.000	L1	ON
0.458250	---	38.14	46.72	8.58	1000.0	9.000	L1	ON
0.755250	32.52	---	56.00	23.48	1000.0	9.000	L1	ON
0.775500	---	27.47	46.00	18.53	1000.0	9.000	L1	ON
1.835250	33.68	---	56.00	22.32	1000.0	9.000	L1	ON
1.862250	---	28.72	46.00	17.28	1000.0	9.000	L1	ON
2.177250	---	28.54	46.00	17.46	1000.0	9.000	L1	ON
2.456250	33.26	---	56.00	22.74	1000.0	9.000	L1	ON
4.490250	---	28.42	46.00	17.58	1000.0	9.000	L1	ON
4.564500	33.19	---	56.00	22.81	1000.0	9.000	L1	ON
10.347000	30.96	---	60.00	29.04	1000.0	9.000	N	ON
10.567500	---	26.53	50.00	23.47	1000.0	9.000	N	ON
12.075000	---	31.37	50.00	18.63	1000.0	9.000	L1	ON
12.167250	36.28	---	60.00	23.72	1000.0	9.000	L1	ON
20.181750	---	28.88	50.00	21.12	1000.0	9.000	L1	ON
20.184000	---	27.99	50.00	22.01	1000.0	9.000	L1	ON
20.184000	30.33	---	60.00	29.67	1000.0	9.000	L1	ON
24.319500	37.28	---	60.00	22.72	1000.0	9.000	N	ON
24.389250	---	32.45	50.00	17.55	1000.0	9.000	N	ON

4.2 Test Results – Radiated Emissions (Intentional Transmitter)

4.2.1 Radiated Emissions (Intentional) – Test Summary

Test Specification	FCC 47 CFR 15.209 (Part 15 Subpart C)	
Test Engineer & Date	Niall Forrester Sam Ebadeh	2023.03.28 – 2023.03.31
EUT and Ancillary Equipment IDs	A003438513-006	N/A
EUT Operation Mode(s)	Rec – No Chg – CTX	
EUT Wireless Configuration(s)	Simultaneous Transmissions (see details below)	
EUT Hardware Configuration(s)	Stand-alone (Space Recorder)	
Overall Result	PASS	

Test Parameter	Wireless Configuration	Frequency Range	Result
Radiated Emissions (WLAN 2.4GHz + 4xBLE)	WLAN 802.11b 20MHz 11Mbps (Main) CH 6 (QPSK 2437 MHz) + Bluetooth Low Energy LE_2M (Microphone Tx0+Tx1+Tx2+Tx3) Low Channel (GFSK 2402 MHz)	9 kHz – 30 MHz	PASS
Radiated Emissions (WLAN 2.4GHz + 4xBLE)	WLAN 802.11b 20MHz 11Mbps (Main) CH 1 (QPSK 2412 MHz) + Bluetooth Low Energy LE_2M (Microphone Tx0+Tx1+Tx2+Tx3) Low Channel (GFSK 2402 MHz)	1 GHz – 18 GHz	PASS
Radiated Emissions (WLAN 2.4GHz + 4xBLE)	WLAN 802.11g 20MHz 24Mbps (Main) CH 6 (16-QAM 2437 MHz) + Bluetooth Low Energy LE_2M (Microphone Tx0+Tx1+Tx3) Low Channel (GFSK 2402 MHz) + Bluetooth Low Energy LE_2M (Microphone Tx2) Mid Channel (GFSK 2440 MHz)	18 GHz – 40 GHz	PASS
Radiated Emissions (WLAN 5GHz + 4xBLE)	WLAN 802.11n 40MHz MCS0 (Main) CH 36 (BPSK 5190 MHz) + Bluetooth Low Energy LE_2M (Microphone Tx0+Tx1+Tx3) Low Channel (GFSK 2402 MHz) + Bluetooth Low Energy LE_2M (Microphone Tx2) High Channel (GFSK 2480 MHz)	30 MHz – 1 GHz	PASS
Radiated Emissions (WLAN 5GHz + 4xBLE)	WLAN 802.11n 40MHz MCS0 (Main) CH 36 (BPSK 5190 MHz) + Bluetooth Low Energy LE_2M (Microphone Tx0+Tx1+Tx2+Tx3) Low Channel (GFSK 2402 MHz)	1 GHz – 18 GHz	PASS
Radiated Emissions (WLAN 5GHz + 4xBLE)	WLAN 802.11a 20MHz 6Mbps (Main) CH 100 (BPSK 5500 MHz) + Bluetooth Low Energy LE_2M (Microphone Tx0+Tx1+Tx3) Low Channel (GFSK 2402 MHz) + Bluetooth Low Energy LE_2M (Microphone Tx2) Mid Channel (GFSK 2440 MHz)	18 GHz – 40 GHz	PASS

4.2.2 Radiated Emissions (Intentional) – Test Details: WLAN 2.4GHz + 4xBLE

WLAN 2.4GHz + 4xBLE: 9 kHz – 30 MHz

Test mode condition	(802.11b 20MHz 11Mbps CH6) + (BLE Low+Low+Low+Low)	
Antenna orientation	Loop Antenna parallel to axis	
Sweep frequency	9 kHz – 30 MHz	
Standard	47 CFR FCC Part 15 subpart C	
EUT	A003438513-006	
Ancillary Equipment	N/A	
Test Engineer	Niall Forrester	Date: 2023.03.31
Chamber details	Chamber: SAC 5	

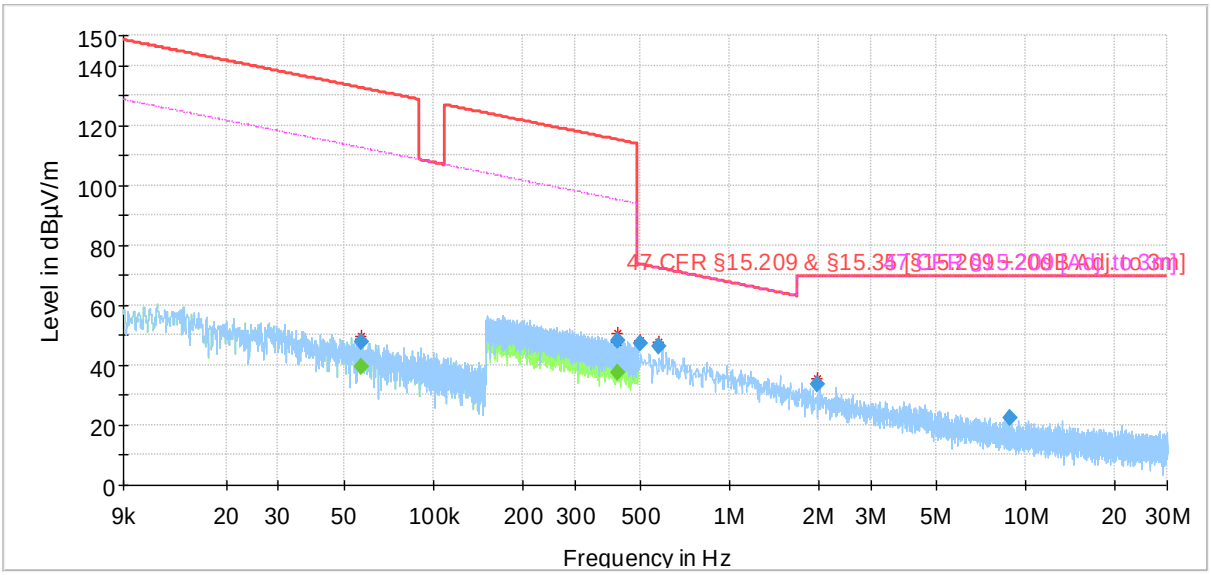

Preview Result 2-AVG
Preview Result 1-PK+
Critical_Freqs AVG
Critical_Freqs PK+
47 CFR §15.209 & §15.35 [§15.209 +20dB Adj. to 3m]
47 CFR §15.209 [Adj. to 3m]
Final_Result PK+
Final_Result AVG

Frequency (MHz)	MaxPeak (dBµV/m)	Average (dBµV/m)	Limit (dBµV/m)	Margin (dB)	Meas. Time (ms)	Bandwidth (kHz)	Height (cm)	Pol	Azimuth (deg)
0.057077	47.64	---	132.48	84.83	1000.0	0.200	100.0	H	135.0
0.057077	---	39.47	112.48	73.01	1000.0	0.200	100.0	H	135.0
0.420147	48.42	---	115.14	66.71	1000.0	9.000	100.0	H	101.0
0.420147	---	37.69	95.14	57.44	1000.0	9.000	100.0	H	101.0
0.497857	47.08	---	73.66	26.58	1000.0	9.000	100.0	H	-13.0
0.579704	46.10	---	72.34	26.25	1000.0	9.000	100.0	H	-1.0
1.989893	33.77	---	69.50	35.73	1000.0	9.000	100.0	H	179.0
8.886405	22.49	---	69.50	47.01	1000.0	9.000	100.0	H	76.0

Test mode condition	(802.11b 20MHz 11Mbps CH6) + (BLE Low+Low+Low+Low)	
Antenna orientation	Loop Antenna perpendicular to axis	
Sweep frequency	9 kHz – 30 MHz	
Standard	47 CFR FCC Part 15 subpart C	
EUT	A003438513-006	
Ancillary Equipment	N/A	
Test Engineer	Niall Forrester	Date: 2023.03.31
Chamber details	Chamber: SAC 5	

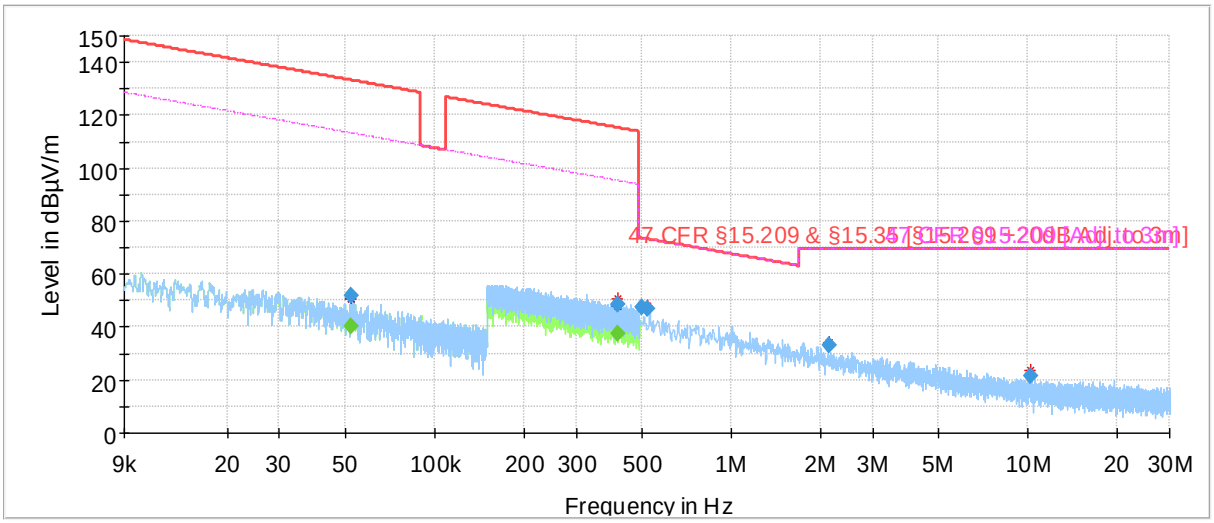

Preview Result 2-AVG
Preview Result 1-PK+
Critical_Freqs AVG
Critical_Freqs PK+
47 CFR §15.209 & §15.35 [§15.209 +20dB Adj. to 3m]
47 CFR §15.209 [Adj. to 3m]
Final_Result PK+
Final_Result AVG
MaxPeak-PK+ (Single)
Average-AVG (Single)

Frequency (MHz)	MaxPeak (dBµV/m)	Average (dBµV/m)	Limit (dBµV/m)	Margin (dB)	Meas. Time (ms)	Bandwidth (kHz)	Height (cm)	Pol	Azimuth (deg)
0.052501	---	40.31	113.20	72.89	1000.0	0.200	100.0	H	315.0
0.052501	51.59	---	133.20	81.61	1000.0	0.200	100.0	H	315.0
0.414916	---	37.66	95.25	57.59	1000.0	9.000	100.0	H	256.0
0.414916	48.79	---	115.25	66.45	1000.0	9.000	100.0	H	256.0
0.502013	47.45	---	73.59	26.14	1000.0	9.000	100.0	H	45.0
0.523360	46.72	---	73.23	26.51	1000.0	9.000	100.0	H	77.0
2.129200	33.18	---	69.50	36.32	1000.0	9.000	100.0	H	128.0
10.255765	21.47	---	69.50	48.03	1000.0	9.000	100.0	H	154.0

Test mode condition	(802.11b 20MHz 11Mbps CH6) + (BLE Low+Low+Low+Low)	
Antenna orientation	Loop Antenna perpendicular to axis	
Sweep frequency	9 kHz – 30 MHz	
Standard	47 CFR FCC Part 15 subpart C	
EUT	A003438513-006	
Ancillary Equipment	N/A	
Niall Forrester	Date: 2023.03.31	Niall Forrester
Chamber details	Chamber: SAC 5	

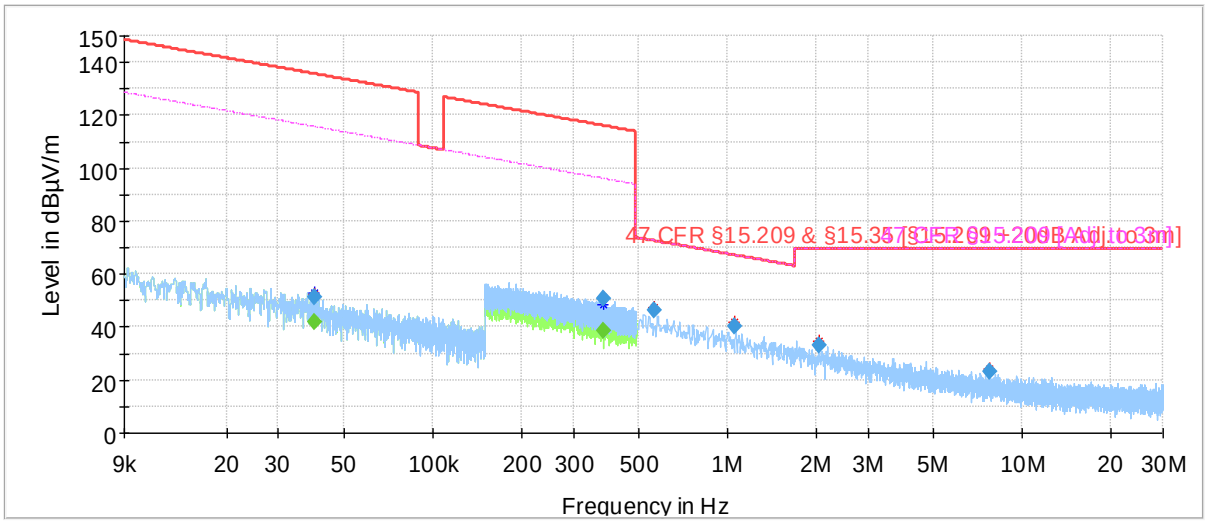

Preview Result 2-AVG
Preview Result 1-PK+
Critical_Freqs AVG
Critical_Freqs PK+
47 CFR §15.209 & §15.35 [§15.209 +20dB Adj. to 3m]
47 CFR §15.209 [Adj. to 3m]
Final_Result PK+
Final_Result AVG
MaxPeak-PK+ (Single)
Average-AVG (Single)

Frequency (MHz)	MaxPeak (dBµV/m)	Average (dBµV/m)	Limit (dBµV/m)	Margin (dB)	Meas. Time (ms)	Bandwidth (kHz)	Height (cm)	Pol	Azimuth (deg)
0.039735	---	41.72	115.62	73.90	1000.0	0.200	100.0	H	257.0
0.039735	51.34	---	135.62	84.29	1000.0	0.200	100.0	H	257.0
0.378440	---	38.53	96.04	57.52	1000.0	9.000	100.0	H	294.0
0.378440	50.80	---	116.04	65.24	1000.0	9.000	100.0	H	294.0
0.564398	46.05	---	72.58	26.52	1000.0	9.000	100.0	H	315.0
1.060429	40.16	---	67.11	26.95	1000.0	9.000	100.0	H	64.0
2.049071	33.27	---	69.50	36.23	1000.0	9.000	100.0	H	135.0
7.760354	22.92	---	69.50	46.58	1000.0	9.000	100.0	H	45.0

WLAN 2.4GHz + 4xBLE: 1 GHz – 18 GHz

Test mode condition	(802.11b 20MHz 11Mbps CH1) + (BLE Low+Low+Low+Low)	
Antenna orientation	Horizontal & vertical	
Sweep frequency	1 GHz – 18 GHz	
Standard	47 CFR FCC Part 15 subpart C	
EUT	A003438513-006	
Ancillary Equipment	N/A	
Test Engineer	Niall Forrester	Date: 2023.03.29
Chamber details	Chamber: SAC 5	

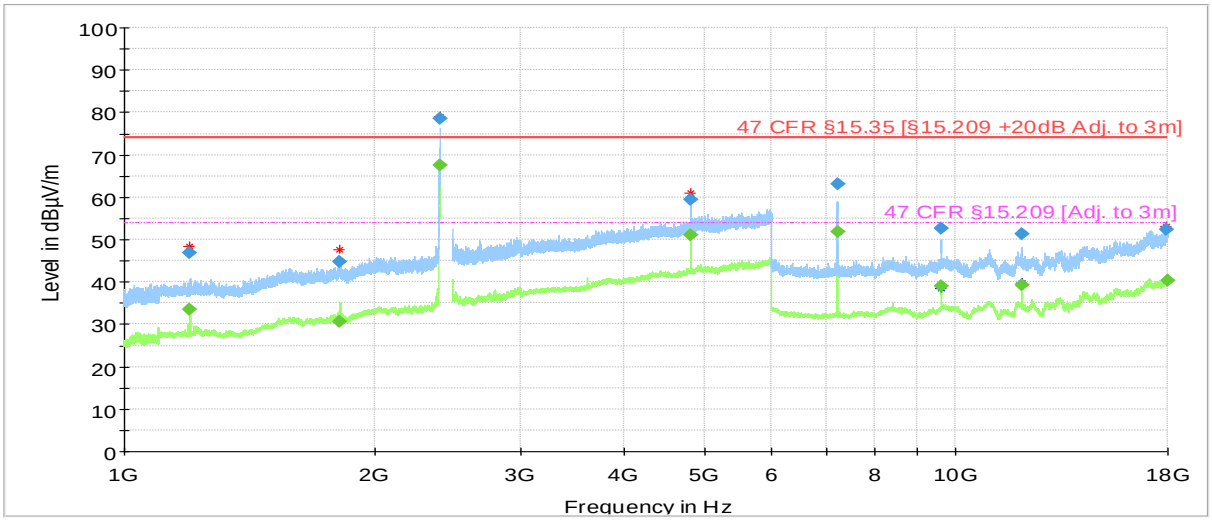

NOTE: peak at 2400MHz is an artefact of the measuring equipment and not due to the DUT
See Band Edge tests for more detailed results at this frequency

Frequency (MHz)	MaxPeak (dBµV/m)	Average (dBµV/m)	Limit (dBµV/m)	Margin (dB)	Meas. Time (ms)	Bandwidth (kHz)	Height (cm)	Pol	Azimuth (deg)
1199.821000	---	33.44	53.98	20.54	1000.0	1000.000	100.0	V	112.0
1199.950000	46.80	---	73.98	27.18	1000.0	1000.000	125.0	V	158.0
1812.587000	---	30.66	53.98	23.32	1000.0	1000.000	102.0	H	335.0
1816.957000	44.68	---	73.98	29.30	1000.0	1000.000	102.0	H	338.0
4803.206000	59.36	---	73.98	14.61	1000.0	1000.000	100.0	V	206.0
4804.947000	---	50.96	53.98	3.02	1000.0	1000.000	103.0	H	221.0
7204.883000	---	51.80	53.98	2.18	1000.0	1000.000	175.0	V	322.0
7207.513000	63.02	---	73.98	10.96	1000.0	1000.000	159.0	V	323.0
9606.431000	---	39.00	53.98	14.98	1000.0	1000.000	101.0	V	-4.0
9610.251000	52.49	---	73.98	21.49	1000.0	1000.000	110.0	V	85.0
12007.931000	51.35	---	73.98	22.63	1000.0	1000.000	175.0	V	310.0
12012.489000	---	39.28	53.98	14.70	1000.0	1000.000	159.0	V	310.0
17950.525000	52.46	---	73.98	21.52	1000.0	1000.000	175.0	H	22.0
17979.634000	---	40.43	53.98	13.55	1000.0	1000.000	125.0	H	20.0

WLAN 2.4GHz + 4xBLE: 18 GHz – 40 GHz

Test mode condition	(802.11g 20MHz 24Mbps CH6) + (BLE Low+Low+Mid+Low)	
Antenna orientation	Horizontal & vertical	
Sweep frequency	18 GHz – 40 GHz	
Standard	47 CFR FCC Part 15 subpart C	
EUT	A003438513-006	
Ancillary Equipment	N/A	
Test Engineer	Niall Forrester	Date: 2023.03.30
Chamber details	Chamber: SAC 5	

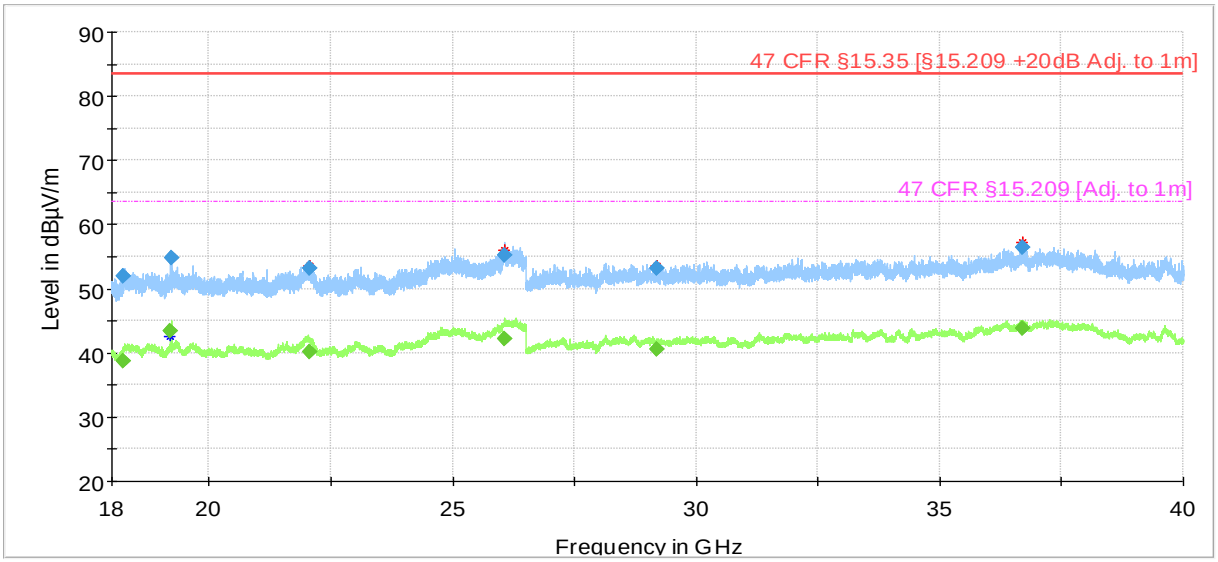

Preview Result 2-AVG
Critical_Freqs AVG
Critical_Freqs AVG
47 CFR §15.35 [§15.209 +20dB Adj. to 1m]
Final_Result PK+
Final_Result PK+
Preview Result 1-PK+
Critical_Freqs PK+
Critical_Freqs PK+
47 CFR §15.209 [Adj. to 1m]
Final_Result AVG
Final_Result AVG

Frequency (MHz)	MaxPeak (dBµV/m)	Average (dBµV/m)	Limit (dBµV/m)	Margin (dB)	Meas. Time (ms)	Bandwidth (kHz)	Height (cm)	Pol	Azimuth (deg)
18238.528000	51.87	---	83.52	31.65	1000.0	1000.000	155.0	H	22.0
18241.153000	---	38.79	63.52	24.73	1000.0	1000.000	155.0	V	158.0
19212.331000	---	43.38	63.52	20.14	1000.0	1000.000	155.0	H	342.0
19213.212000	54.83	---	83.52	28.69	1000.0	1000.000	155.0	H	342.0
22061.453000	---	40.22	63.52	23.30	1000.0	1000.000	155.0	H	38.0
22066.305000	53.14	---	83.52	30.38	1000.0	1000.000	155.0	H	322.0
26069.946000	55.20	---	83.52	28.33	1000.0	1000.000	155.0	H	342.0
26072.396000	---	42.18	63.52	21.35	1000.0	1000.000	155.0	V	22.0
29189.128000	---	40.51	63.52	23.01	1000.0	1000.000	155.0	H	308.0
29191.561000	53.20	---	83.52	30.32	1000.0	1000.000	155.0	V	116.0
36708.069000	56.47	---	83.52	27.05	1000.0	1000.000	155.0	H	262.0
36708.937000	---	43.78	63.52	19.74	1000.0	1000.000	155.0	V	8.0

4.2.3 Radiated Emissions (Intentional) – Test Details: WLAN 5GHz + 4xBLE

WLAN 5GHz + 4xBLE: 30 MHz – 1 GHz

Test mode condition	(802.11n 40MHz MCS0 CH36) + (BLE Low+Low+High+Low)	
Antenna orientation	Horizontal & vertical	
Sweep frequency	30 MHz – 1 GHz	
Standard	47 CFR FCC Part 15 subpart C	
EUT	A003438513-006	
Ancillary Equipment	N/A	
Test Engineer	Sam Ebadeh	Date: 2023.03.28
Chamber details	Chamber: SAC 5	

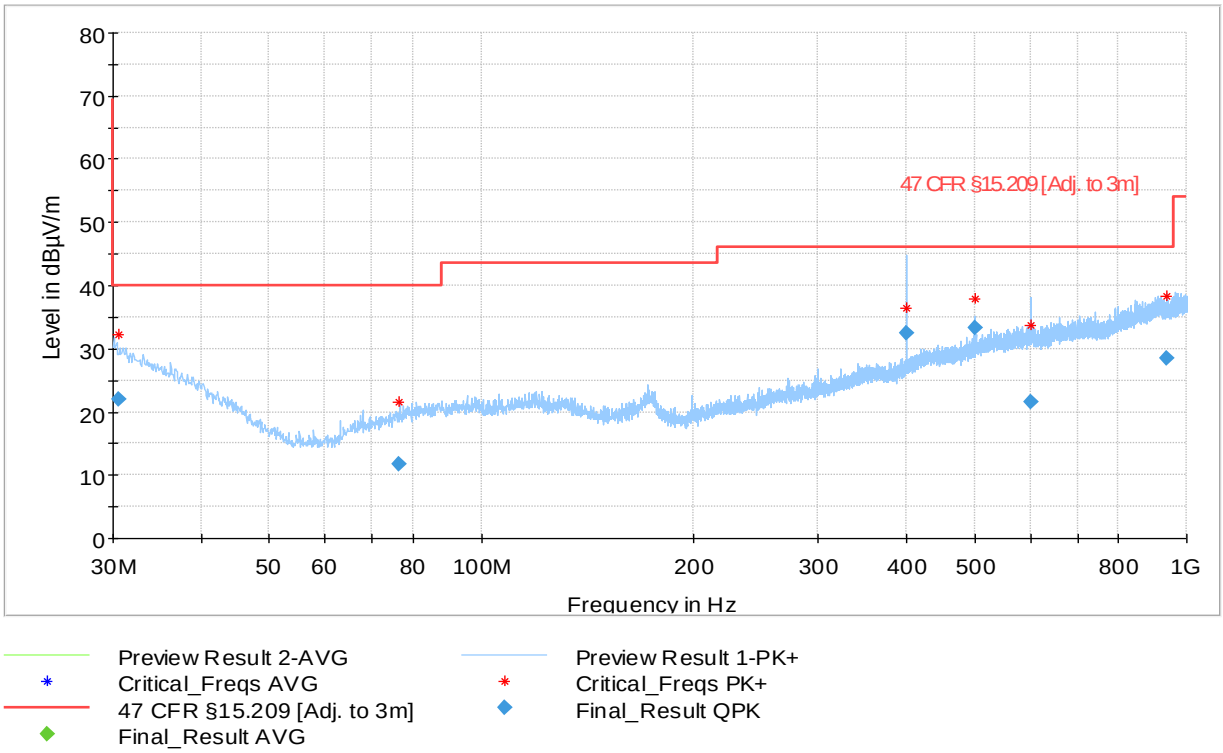

Frequency (MHz)	QuasiPeak (dBµV/m)	Limit (dBµV/m)	Margin (dB)	Meas. Time (ms)	Bandwidth (kHz)	Height (cm)	Pol	Azimuth (deg)
30.582622	21.97	40.00	18.03	1000.0	120.000	356.0	V	188.0
76.206720	11.81	40.00	28.19	1000.0	120.000	307.0	V	323.0
399.974800	32.51	46.02	13.51	1000.0	120.000	175.0	V	158.0
499.995000	33.24	46.02	12.78	1000.0	120.000	125.0	V	22.0
600.263520	21.49	46.02	24.53	1000.0	120.000	312.0	V	112.0
938.411800	28.49	46.02	17.53	1000.0	120.000	157.0	V	267.0

WLAN 5GHz + 4xBLE: 1 GHz – 18 GHz

Test mode condition	(802.11n 40MHz MCS0 CH36) + (BLE Low+Low+Low+Low)	
Antenna orientation	Horizontal & vertical	
Sweep frequency	1 GHz – 18 GHz	
Standard	47 CFR FCC Part 15 subpart C	
EUT	A003438513-006	
Ancillary Equipment	N/A	
Test Engineer	Niall Forrester	Date: 2023.03.29
Chamber details	Chamber: SAC 5	

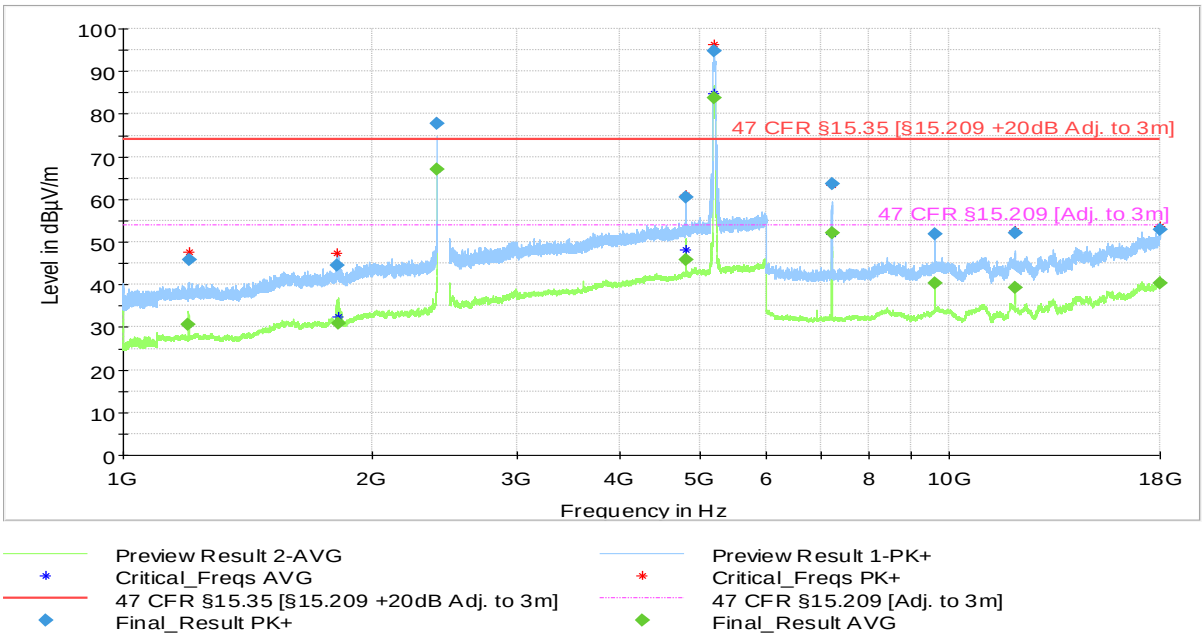

NOTE: peak at 2400MHz is an artefact of the measuring equipment and not due to the DUT
See Band Edge tests for more detailed results at this frequency
Peak at 5190MHz is WLAN 5GHz transmitter and has been ignored

Frequency (MHz)	MaxPeak (dBµV/m)	Average (dBµV/m)	Limit (dBµV/m)	Margin (dB)	Meas. Time (ms)	Bandwidth (kHz)	Height (cm)	Pol	Azimuth (deg)
1199.565000	---	30.69	53.98	23.29	1000.0	1000.000	100.0	V	112.0
1200.126000	45.77	---	73.98	28.21	1000.0	1000.000	125.0	V	101.0
1816.494000	44.47	---	73.98	29.51	1000.0	1000.000	102.0	H	112.0
1819.889000	---	30.96	53.98	23.02	1000.0	1000.000	186.0	V	68.0
4803.145000	---	45.82	53.98	8.16	1000.0	1000.000	100.0	V	206.0
4803.414000	60.43	---	73.98	13.55	1000.0	1000.000	127.0	H	179.0
7204.831000	63.60	---	73.98	10.38	1000.0	1000.000	175.0	V	323.0
7207.404000	---	52.00	53.98	1.98	1000.0	1000.000	163.0	V	323.0
9606.304000	51.81	---	73.98	22.17	1000.0	1000.000	110.0	V	-4.0
9610.152000	---	40.31	53.98	13.67	1000.0	1000.000	152.0	V	311.0
12007.984000	52.05	---	73.98	21.93	1000.0	1000.000	159.0	V	311.0
12012.367000	---	39.16	53.98	14.82	1000.0	1000.000	159.0	V	310.0
17985.627000	---	40.42	53.98	13.56	1000.0	1000.000	100.0	H	248.0
17990.567000	52.88	---	73.98	21.10	1000.0	1000.000	197.0	H	296.0

WLAN 5GHz + 4xBLE: 18 GHz – 40 GHz

Test mode condition	(802.11a 20MHz 6Mbps CH100)+(BLE Low+Low+Mid+Low)	
Antenna orientation	Horizontal & vertical	
Sweep frequency	18 GHz – 40 GHz	
Standard	47 CFR FCC Part 15 subpart C	
EUT	A003438513-006	
Ancillary Equipment	N/A	
Test Engineer	Niall Forrester	Date: 2023.03.30
Chamber details	Chamber: SAC 5	

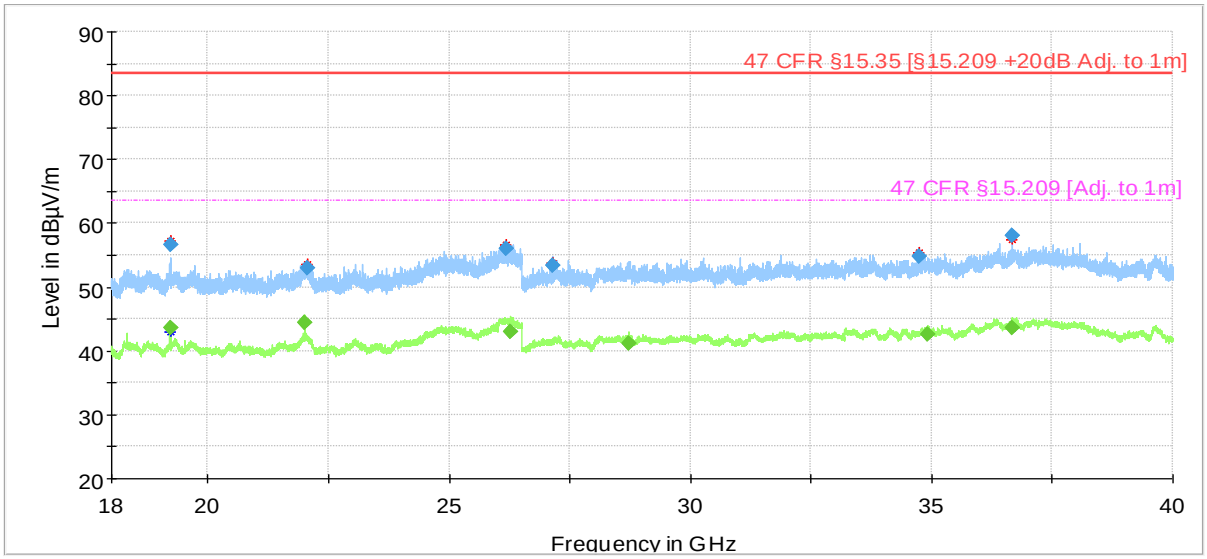

Preview Result 2-AVG
Critical_Freqs AVG
Critical_Freqs AVG
47 CFR §15.35 [§15.209 +20dB Adj. to 1m]
Final_Result PK+
Final_Result PK+
Preview Result 1-PK+
Critical_Freqs PK+
Critical_Freqs PK+
47 CFR §15.209 [Adj. to 1m]
Final_Result AVG
Final_Result AVG

Frequency (MHz)	MaxPeak (dBµV/m)	Average (dBµV/m)	Limit (dBµV/m)	Margin (dB)	Meas. Time (ms)	Bandwidth (kHz)	Height (cm)	Pol	Azimuth (deg)
19220.275000	---	43.51	63.52	20.01	1000.0	1000.000	155.0	H	342.0
19220.384000	56.56	---	83.52	26.96	1000.0	1000.000	155.0	H	342.0
22000.022000	---	44.35	63.52	19.18	1000.0	1000.000	155.0	H	322.0
22051.771000	53.03	---	83.52	30.50	1000.0	1000.000	155.0	H	82.0
26195.118000	56.00	---	83.52	27.52	1000.0	1000.000	155.0	V	8.0
26257.601000	---	43.05	63.52	20.47	1000.0	1000.000	155.0	V	22.0
27139.148000	53.47	---	83.52	30.06	1000.0	1000.000	155.0	V	42.0
28710.333000	---	41.11	63.52	22.41	1000.0	1000.000	155.0	V	128.0
34748.682000	54.79	---	83.52	28.73	1000.0	1000.000	155.0	H	292.0
34907.713000	---	42.63	63.52	20.89	1000.0	1000.000	155.0	V	218.0
36680.732000	58.07	---	83.52	25.45	1000.0	1000.000	155.0	H	38.0
36681.131000	---	43.66	63.52	19.86	1000.0	1000.000	155.0	V	232.0

4.3 Test Results – Antenna Conducted Emissions

4.3.1 Antenna Conducted Emissions – Test Summary

Emissions measurements have been performed as radiated test (see section 4.2)

4.4 Test Results – Band Edge Compliance (Authorized Band)

4.4.1 Band Edge Compliance (Authorized Band) – Test Summary

No additional testing performed in Simultaneous Transmission modes

4.5 Test Results – Band Edge Compliance (Restricted Band)

4.5.1 Band Edge Compliance (Restricted Band) – Test Summary

Test Specification	47 CFR 15.209 & 15.247 (d)	
Test Engineer & Date	Sam Ebadeh	2023.03.28
EUT and Ancillary Equipment IDs	A003438513-006	N/A
EUT Operation Mode(s)	Rec – No Chg - CTX	
EUT Wireless Configuration(s)	Simultaneous Transmissions (see details below)	
EUT Hardware Configuration(s)	Stand-alone (Space Recorder)	
Overall Result	PASS	

Test Parameter	Wireless Configuration	Result*
Emissions at Band Edge (Rest. Band – Low Edge)	WLAN 802.11b 20MHz 11Mbps (Main) CH 1 (QPSK 2412 MHz) + Bluetooth Low Energy LE_2M (Microphone Tx0+Tx1+Tx2+Tx3) Low Channels (GFSK 2402/2404/2406/2408 MHz)	PASS
Emissions at Band Edge (Rest. Band – High Edge)	WLAN 802.11b 20MHz 11Mbps (Main) CH 11 (QPSK 2462 MHz) + Bluetooth Low Energy LE_2M (Microphone Tx0+Tx1+Tx2+Tx3) High Channels (GFSK 2480/2478/2476/2474 MHz)	PASS

*Note that the WLAN and BLE transmitters have been set to transmit on channels frequencies close to each other in order to maximise the potential for intermodulation products.

4.5.2 Band Edge Compliance (Restricted Band) – Test Summary

Restricted Band – Low Edge – WLAN 2.4GHz + 4xBLE

Test mode condition	(802.11b 20MHz 11Mbps CH1) + (BLE 2402+2404+2406+2408MHz)	
Antenna orientation	Horizontal & vertical	
Sweep frequency	1 GHz – 18 GHz	
Standard	47 CFR FCC Part 15 subpart C	
EUT	A003438513-006	
Ancillary Equipment	N/A	
Test Engineer	Sam Ebadeh	Date: 2023.03.28
Chamber details	Chamber: SAC 5	

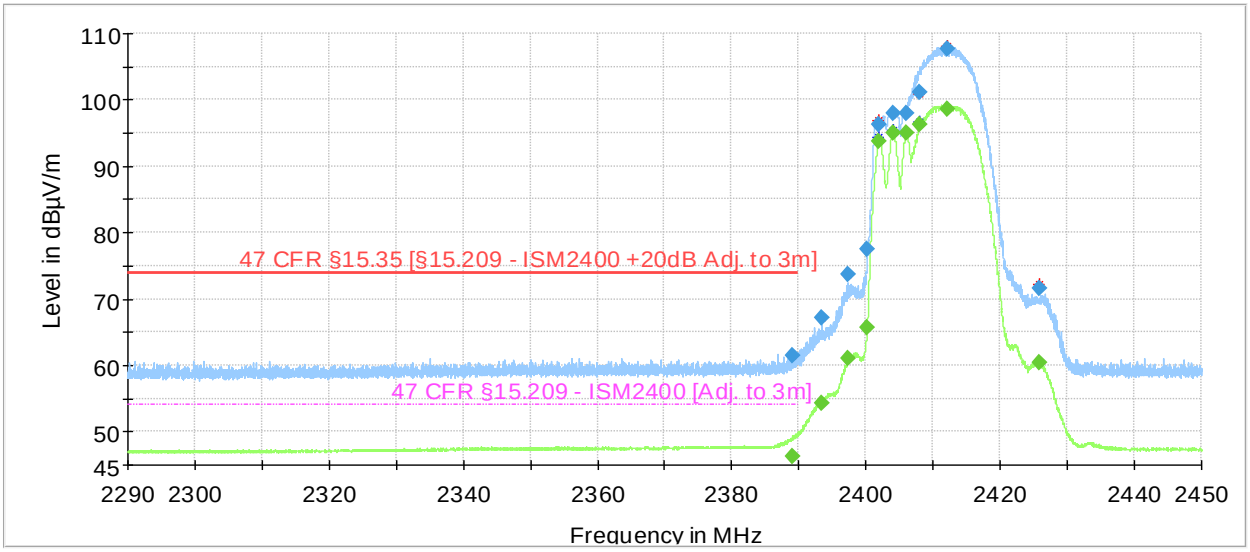

Preview Result 2-AVG
Preview Result 1-PK+
Critical_Freqs AVG
Critical_Freqs PK+
47 CFR §15.35 [§15.209 - ISM2400 +20dB Adj. to 3m]
47 CFR §15.209 - ISM2400 [Adj. to 3m]
Final_Result PK+
Final_Result AVG

Frequency (MHz)	MaxPeak (dBµV/m)	Average (dBµV/m)	Limit (dBµV/m)	Margin (dB)	Meas. Time (ms)	Bandwidth (kHz)	Height (cm)	Pol	Azimuth (deg)
2389.040000	61.56	---	73.98	12.42	1000.0	1000.000	106.0	H	38.0
2389.040000	---	46.17	53.98	7.81	1000.0	1000.000	106.0	H	38.0
2393.360000	67.26	---	---	---	1000.0	1000.000	125.0	V	-6.0
2393.360000	---	54.27	---	---	1000.0	1000.000	125.0	V	-6.0
2397.408000	73.63	---	---	---	1000.0	1000.000	199.0	H	19.0
2397.408000	---	61.10	---	---	1000.0	1000.000	199.0	H	19.0
2400.192000	---	65.66	---	---	1000.0	1000.000	199.0	H	41.0
2400.192000	77.43	---	---	---	1000.0	1000.000	199.0	H	41.0
2402.000000	96.38	---	---	---	1000.0	1000.000	193.0	H	41.0
2402.000000	---	93.73	---	---	1000.0	1000.000	193.0	H	41.0
2404.080000	---	95.06	---	---	1000.0	1000.000	195.0	V	0.0
2404.080000	97.90	---	---	---	1000.0	1000.000	195.0	V	0.0
2406.080000	---	94.96	---	---	1000.0	1000.000	149.0	V	184.0
2406.080000	97.99	---	---	---	1000.0	1000.000	149.0	V	184.0
2408.000000	---	96.19	---	---	1000.0	1000.000	100.0	V	174.0
2408.000000	101.07	---	---	---	1000.0	1000.000	100.0	V	174.0
2412.096000	107.60	---	---	---	1000.0	1000.000	193.0	H	15.0
2412.096000	---	98.57	---	---	1000.0	1000.000	193.0	H	15.0
2425.744000	71.51	---	---	---	1000.0	1000.000	187.0	H	6.0
2425.744000	---	60.39	---	---	1000.0	1000.000	187.0	H	6.0

Restricted Band –High Edge – WLAN 2.4GHz + 4xBLE

Test mode condition	(802.11b 20MHz 11Mbps CH11) + (BLE 2480+2478+2476+2474MHz)	
Antenna orientation	Horizontal & vertical	
Sweep frequency	1 GHz – 18 GHz	
Standard	47 CFR FCC Part 15 subpart C	
EUT	A003438513-006	
Ancillary Equipment	N/A	
Test Engineer	Sam Ebadeh	Date: 2023.03.28
Chamber details	Chamber: SAC 5	

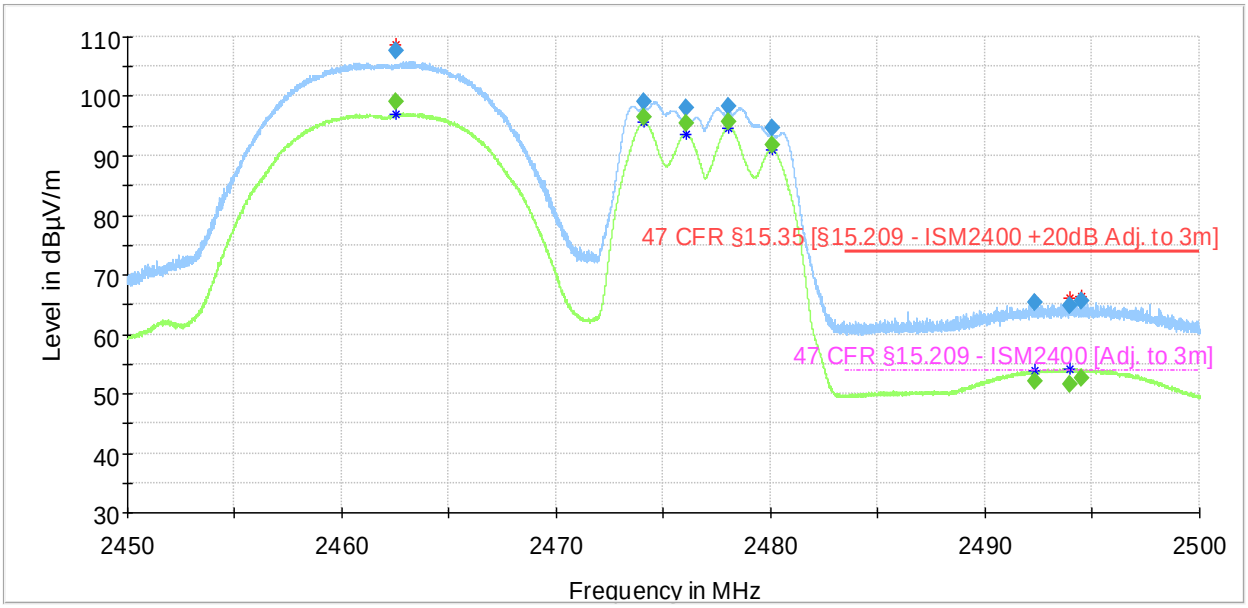

Preview Result 2-AVG
Preview Result 1-PK+
Critical_Freqs AVG
Critical_Freqs PK+
47 CFR §15.35 [§15.209 - ISM2400 +20dB Adj. to 3m]
47 CFR §15.209 - ISM2400 [Adj. to 3m]
Final_Result PK+
Final_Result AVG

Frequency (MHz)	MaxPeak (dBµV/m)	Average (dBµV/m)	Limit (dBµV/m)	Margin (dB)	Meas. Time (ms)	Bandwidth (kHz)	Height (cm)	Pol	Azimuth (deg)
2462.515000	107.73	---	---	---	1000.0	1000.000	180.0	H	200.0
2462.515000	---	99.02	---	---	1000.0	1000.000	180.0	H	200.0
2474.060000	99.00	---	---	---	1000.0	1000.000	100.0	V	196.0
2474.060000	---	96.50	---	---	1000.0	1000.000	100.0	V	196.0
2476.070000	---	95.45	---	---	1000.0	1000.000	210.0	V	182.0
2476.070000	98.05	---	---	---	1000.0	1000.000	210.0	V	182.0
2478.045000	98.22	---	---	---	1000.0	1000.000	115.0	V	12.0
2478.045000	---	95.66	---	---	1000.0	1000.000	115.0	V	12.0
2480.055000	---	91.88	---	---	1000.0	1000.000	116.0	V	336.0
2480.055000	94.63	---	---	---	1000.0	1000.000	116.0	V	336.0
2492.295000	65.33	---	73.98	8.65	1000.0	1000.000	156.0	V	18.0
2492.295000	---	52.20	53.98	1.78	1000.0	1000.000	156.0	V	18.0
2493.915000	64.92	---	73.98	9.06	1000.0	1000.000	134.0	V	12.0
2493.915000	---	51.69	53.98	2.29	1000.0	1000.000	134.0	V	12.0
2494.510000	65.68	---	73.98	8.30	1000.0	1000.000	123.0	V	0.0
2494.510000	---	52.63	53.98	1.35	1000.0	1000.000	123.0	V	0.0

4.6 Test Results – 20dB Bandwidth

4.6.1 20dB Bandwidth – Test Summary

This requirement is not applicable as the radio technology is non-hopping

4.7 Test Results – Carrier (Hopping Channel) Separation

4.7.1 Carrier (Hopping Channel) Separation – Test Summary

This requirement is not applicable as the radio technology is non-hopping

4.8 Test Results – Number of Hopping Channels

4.8.1 Number of Hopping Channels – Test Summary

This requirement is not applicable as the radio technology is non-hopping

4.9 Test Results – Time of Occupancy (Dwell Time)

4.9.1 Time of Occupancy (Dwell Time) – Test Summary

This requirement is not applicable as the radio technology is non-hopping

4.10 Test Results – 6dB Bandwidth

4.10.1 6dB Bandwidth – Test Summary

No additional testing performed in Simultaneous Transmission modes

4.11 Test Results – Peak Conducted Output Power

4.11.1 Peak Conducted Output Power – Test Summary

No additional testing performed in Simultaneous Transmission modes

4.12 Test Results – Power Spectral Density

4.12.1 Power Spectral Density – Test Summary

No additional testing performed in Simultaneous Transmission modes

5. TEST EQUIPMENT STATUS

5.1 List of Hardware with Calibration Dates

5.1.1 Hardware List – Conducted Emissions System

Type	Manufacturer	Model	Serial Number / ID	Calibration Date	Calibration Due
Two-Line V-network	Rohde & Schwarz	ENV216	101090 2704076	2022.07.14	2023.07.14
Test Receiver 9KHz to 3.5 GHz	Rohde & Schwarz	ESR3	101674 2704016	2022.08.19	2023.08.19
Humidity Temperature Probe	Lufft	OPUS 20	146.0216.0802.030 2703980	2022.07.27	2024.07.27

5.1.2 Hardware List – SAC5 System

Type	Manufacturer	Model	Serial Number / ID	Calibration Date	Calibration Due
EMI Test Receiver	Rohde & Schwarz	ESW44	101760 2881044	2022.07.21	2023.07.21
Ultra Broadband Antenna	Rohde & Schwarz	HL562E	100988 2823181	2021.07.26	2023.07.26
Double Ridged Waveguide Horn Antenna	Rohde & Schwarz	HF907	102678 2823164	2021.07.26	2023.07.26
Horn Antenna	ETS Lindgren	UG-596A/U	20898 2814839	2022.07.26	2024.07.26
Horn Antenna – 40 GHz	ETS Lindgren	UG-600A/U	20623 2814834	2022.07.26	2024.07.26
Control Device	Maturo	NCD	NCD/393/2372.01 2884216	N/A	N/A
Open Switch & Control Unit	Rohde & Schwarz	OSP150	100081 2884198	2022.08.01	2023.08.01
Open Switch & Control Unit	Rohde & Schwarz	OSP120	100084 2761253	2022.08.01	2023.08.01
Shielded Filter Unit	Rohde & Schwarz	OSP-F Extension 1	101333 2761265	2022.08.01	2023.08.01
Shielded Filter Unit	Rohde & Schwarz	OSP-F Extension 2	101335 2761266	2022.08.01	2023.08.01
Shielded Filter Unit	Rohde & Schwarz	OSP-F Base Unit	101330 2761262	2022.08.01	2023.08.01
Humidity Temperature Probe	Lufft	OPUS 20	146.0216.0802.030 2703980	2022.07.27	2024.07.27

5.2 Software / Firmware Versions

Equipment	Software / Firmware Name	Version
Comprehensive Testing Environment (CTE)	CTE – TMF CTE – BT	V51.0 V44.0
Conducted Emissions System	EMC 32	V10.60.20
SAC 5	EMC 32	V10.60.20

6. MEASUREMENT UNCERTAINTY

6.1 Measurement Uncertainty for Conducted Emissions

Parameter	Uncertainty (Coverage Factor k=2)
Conducted emissions with LISN 150KHz to 30 MHz	2.98 dB

6.2 Measurement Uncertainty for SAC 5 (Radiated Emissions & Band Edge)

Parameter	Uncertainty (Coverage Factor k=2)
Field Strength 10 Hz -9 kHz	3.38 dB
Field Strength 9 kHz -30 MHz	3.38 dB
Field Strength 30 MHz -1000 MHz	3.38 dB
Field Strength 1 GHz -18 GHz	4.88 dB
Field Strength 18 GHz - 40 GHz	5.14 dB

7. PHOTOGRAPHS

See appendices of reports for testing of individual radio technologies for photographs