AC Charger User Manual

AC CHARGER

TABLE OF CONTENTS

1.Safety Information.....02

2.Moving and Storage Instructions.....04

3.FCC.....05

4.Appearance.....06

5.Specification Sheet.....07

6. Status Description of the Charger Indication Lights.....08

7. Safety Requirements.....08

8. Packing List.....09

9. Tools and Materials Required.....09

10. Installation Steps.....10

11. Operating Instructions.....11

12. Maintebance And Repair.....14

13. Service.....15

1. Safety Information

IMPORTANT SAFETY INSTRUCTIONS
SAVE THESE INSTRUCTIONS
Note de sécurité importante
Enregistrer ces directives

INSTRUCTIONS PERTAINING TO A RISK OF FIRE OR ELECTRIC SHOCK!
Improper connection of the equipment- grounding conductor may result in a risk of electric shock, leading to death or serious injury. Topstar recommends that installation be performed by a licensed electrician or other qualified professional in accordance with the regional electrical code where it is being installed to ensure the EV Charger is properly grounded. Do not modify the provided plug – if it will not fit the outlet, have a proper outlet installed by a licensed electrician or other qualified professional.
Instructions sur les risques d'incendie ou de choc électrique!
Un mauvais raccordement des fils de mise à la terre de l'équipement peut entraîner des risques électriques Choc entraînant la mort ou des blessures graves. Recommandation de Topstar pour adoption Électricien certifié ou autre professionnel qualifié conforme aux codes électriques régionaux Position de montage pour s'assurer que le chargeur de voiture électrique est correctement mis à la terre. Sans modification Si la fiche fournie ne convient pas à la prise, veuillez être fournie par un Électricien ou autre professionnel qualifié.

GROUNDING INSTRUCTIONS
Description de la mise à la terre
This product must be connected to a grounded, metal, permanent wiring system, or an equipment.grounding conductor must be run with the circult conductors and connected to the equipment grounding terminal or lead on the product.
WARNING - Improper connection of the equipment-grounding conductor is able to result in a risk of electric shock. Check with a qualified electrician or serviceman if you are in doubt as to whether the product is properly grounded. Do not modify the plug provided with the product –if it will not fit the outlet, have a proper outlet installed by a qualified electrician.
Avertissement-une mauvaise connexion des fils de mise à la terre de l'équipement peut entraîner Risque de choc électrique. Si vous avez des questions, consultez un électricien ou un réparateur qualifié Si le produit est correctement mis à la terre. Ne modifiez pas la fiche fournie avec le produit- S'il ne s'adapte pas à la prise, faites installer la prise appropriée par un électricien qualifié.
For Hardwired Installation:
This product must be connected to a grounded, metal, permanent wiring system, or an equipment-grounding conductor must be run with the circuit conductors and connected to the equipment grounding terminal or lead on the product.
Pour les installations câblées:
Ce produit doit être raccordé à un système de câblage métallique permanent mis à la terre, ou Le fil de mise à la terre de l'équipement doit fonctionner avec le fil du circuit et être connecté à Équipement Terminal de mise à la terre ou fil sur le produit.

IMPORTANT SAFETY INSTRUCTIONS
SAVE THESE INSTRUCTIONS
Note de sécurité importante
Enregistrer ces directives

INSTRUCTIONS PERTAINING TO A RISK
OF FIRE OR ELECTRIC SHOCK
Instructions relatives aux risques
Incendie ou choc électrique

• Read all the instructions before using this product.
• This device should be supervised when used around children. Do not put fingers into the electric vehicle connector.
• The EV Charger is intended for use with electric vehicles only. Specifically, it is intended only for charging vehicles not requiring ventilation during charging.
• Do not use the EV Charger in any manner other than specified in this installation guide. Refer servicing to qualified service personnel.
• Do not attempt to disassemble or repair any of the components of the EV Charger. There are no user serviceable parts inside.
• Do not use this product if the flexible power cord or EV cable is frayed, has broken insulation, or any other signs of damage.
• Do not use this product if the enclosure or the EV connector is broken, cracked, open, or shows any other indication of damage.
• Do not install the EV Charger in environments with explosive gas or vapors; nor where temperatures are outside its operating range of-22°F to 122°F (-30°C to 50°C).

• Lisez toutes les instructions avant d'utiliser ce produit.
• L'utilisation de l'appareil autour des enfants doit être surveillée. Ne mettez pas vos doigts Connecteur pour véhicule électrique.
• Le chargeur pour véhicules électriques est uniquement disponible pour les véhicules électriques. Concrètement, c'est... Uniquement pour les véhicules en charge qui ne nécessitent pas de ventilation pendant la charge.
• Le chargeur de voiture électrique ne doit pas être utilisé de quelque manière que ce soit, sauf dans les cas spécifiés dans le présent document. Guide d'installation. Faites appel à du personnel de maintenance qualifié pour effectuer la maintenance.
• N'essayez pas de démonter ou de réparer des pièces de votre véhicule électrique Chargeur. N'y a pas de pièces pouvant être réparées par l'utilisateur à l'intérieur.
• N'utilisez pas ce produit si le cordon d'alimentation flexible ou le câble du véhicule électrique est usé ou cassé
Isolation ou tout autre signe de dommage.
• N'utilisez pas ce produit si le boîtier ou le connecteur EV est cassé, fissuré, ouvert ou endommagé Montrez tout autre signe de dommage.
• N'installez pas le chargeur de voiture électrique dans un environnement contenant des gaz ou des vapeurs explosifs; Non...
Températures en dehors de la plage de fonctionnement de -22°F à 122°F (-30°C à 50°C).

2. Moving and Storage Instructions

Improper moving or storage of the EV Charger may result in damage to the product that could result in a risk of fire or electric shock during subsequent use.

Handle charger and packaging with care and avoid dropping it. When moving or lifting the EV Charger, always grasp the unit by the charging station enclosure. Never carry or lift the EV Charger by either the power cable or charging cord.

Store the EV Charger indoors and in its original packaging until it is ready to be installed. Storage temperature should be between -22°F to 176°F (-30°C to 80°C).

Un déplacement ou un stockage incorrect des chargeurs pour véhicules électriques peut endommager le produit, entraînant un risque d'incendie ou de choc électrique lors d'une utilisation ultérieure.

Manipulez le chargeur et l'emballage avec soin pour éviter de tomber. Lors du déplacement ou du levage Chargeur de voiture électrique, veuillez toujours saisir le boîtier de la borne de recharge. Jamais Transportez ou soulevez le chargeur de voiture électrique via un cordon d'alimentation ou un câble de charge.

Conservez le chargeur de voiture électrique à l'intérieur et dans son emballage d'origine jusqu'à ce qu'il soit prêt Installé. La température d'entreposage doit être comprise entre -22°F et 176°F (-30°C et 80°C).

3. FCC&ISEDC

Changes or modifications not expressly approved by the party responsible for compliance could void the user's authority to operate this equipment.

This device complies with Part 15 of the FCC Rules / Industry Canada license-exempt RSS standard (s). Operation is subject to the following two conditions: (1) this device may not cause harmful interference, and (2) this device must accept any interference received, including interference that may cause undesired operation.

This equipment has been tested and found to comply with the limits for a Class B digital device, pursuant to part 15 of the FCC Rules. These limits are designed to provide reasonable protection against harmful interference in a residential installation. This equipment generates uses and can radiate radio frequency energy and, if not installed and used in accordance with the instructions, may cause harmful interference to radio communications. However, there is no guarantee that interference will not occur in a particular installation. If this equipment does cause harmful interference to radio or television reception, which can be determined by turning the equipment off and on, the user is encouraged to try to correct the interference by one or more of the following measures:

—Reorient or relocate the receiving antenna.

—Increase the separation between the equipment and receiver.

—Connect the equipment into an outlet on a circuit different from that to which the receiver is connected.

—Consult the dealer or an experienced radio/TV technician for help.

This equitment complies with CAN ICES-003(BNMB-003(B).

To satisfIy FCC/ISEDC RF exposure requirements, a separation distance of 20cm or more should be maintained between the antenna of this device and persons during device operation.

To ensure compliance, operations at closer than this distance is not recommended.

L'émetteur/récepteur exempt de licence contenu dans le présent appareil est conforme aux CNR d'Innovation, Sciences et Développement économique Canada applicables aux appareils radio exempts de licence. L'exploitation est autorisée aux deux conditions suivantes :

1. L'appareil ne doit pas produire de brouillage;
2. L'appareil doit accepter tout brouillage radioélectrique subi, même si le brouillage est

La FCC/ISEDC des éltats-unis stipule que cet appareil doit être en tout temps éloigné d'au moins 20 cm des personnes pendant son functionnement.

4. Appearance

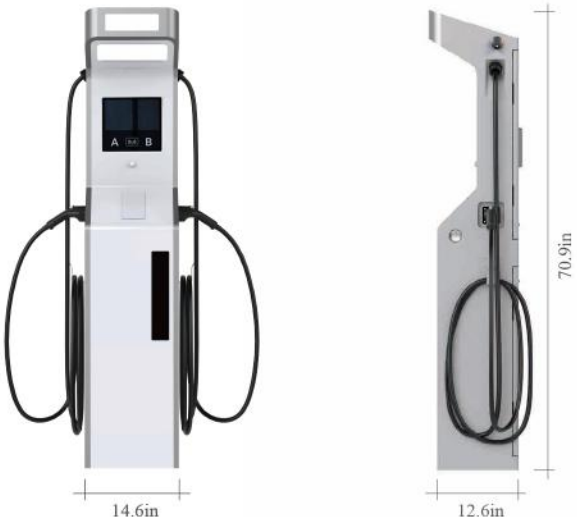

5. Specification Sheet

Electrical Parameter	48A Max ×2	80A Max ×2
	Single phase input: 208 - 240VAC 60 Hz	
	Connector Type: L1+L2+PE	
	11.5kW ×2 at 240VAC	19.2kW ×2 at 240VAC
Input Cord	Hardwired	
Output Cable & Connector	2×18 FT/5.5 m cable (2×25 FT/7.5m optional)	
	2×SAEJ1772, NACS standard compliance	
Environmental Parameter	NEMA Enclosure Type3R: weatherproof, dust-tight	
	Housing Material:Sheet metal and Tempered glass	
	Humidity:<95%.non-condensing	
	Operating Altitude:Up to 2000m	
	IK08: Tempered Glass	
	Operating Temperature: - 22°F to 122°F (- 30°C to 50°C)	
Installation Method	Floor standing installation	
Dimension	14.6in × 12.6in × 70.9in (370mm × 320mm × 1800mm)	
Protection	Overcurrent, Overvoltage, Undervoltage, Ground fault, Surge protection, Over-temperature protection, Leakage protection	
Standards	NEC625, UL817, UL991, UL2231, UL2251, UL2594, PART 15.225, RSS-210, ISO 15118, OCPP1.6J Compliance	
Certifcation	ETL, FCC, IC, Energy Star, CTEP compliance, ISO 15118 Compliance	

HVIN	PLC Module	WWAN Module	Rated Current
TSEC240V/80A2US-RGPC	√	√	80A
TSEC240V/80A2US-RGC	X	√	80A
TSEC240V/80A2US-RPC	√	X	80A
TSEC240V/80A2US-RC	X	X	80A
TSEC240V/48A2US-RGPC	√	√	48A
TSEC240V/48A2US-RGC	X	√	48A
TSEC240V/48A2US-RPC	√	X	48A
TSEC240V/48A2US-RC	X	X	48A

6. Status Description of the Charger Indication Lights

Parking Occupancy Indication Light	Status
Solid Blue	Parking spots are occupied
Solid Green	One or two parking spots available
Screen Indication Lights	**Work Status**
Power	
OFF	Charger does not have power
Solid Blue	Charger has power, standby mode
Charge	
OFF	EV does not charge
Flash Green	EV is charging
Solid Green	EV charging complete
Fault	
Red light flashes 1 time in 3s	Overvoltage Waring
Red light flashes 2 times in 3s	Undervoltage Waring
Red light flashes 3 times in 3s	Output over current
Red light flashes 4 times in 3s	Charger has exceeded nominal temperature
Red light flashes 5 times in 3s	Current leakage
Red light flashes 6 times in 3s	Charger is not grounded (Ensure that the EV charger is properly wired and grounded)
Red light flashes 7 times in 3s	CP line not properly connected
Red light flashes 8 time in 3s	Relay fused in position (Disconnect from power immediately, contact technical support.)

7. Safety Requirements

·Read this user manual thoroughly and make sure to review all local building and electrical codes before installing the AC charger. A qualified technician should install the AC charger according to the user manual and local safety regulations.

·Use appropriate protection when connecting to the main power distribution cable.

·Select and install the appropriate circuit breaker as required by local regulations.

·Disconnect switch for each ungrounded conductor of AC input shall be provided by others in accordance with the National Electric Code,ANSI/NFPA 70.

·Verify that the Wall Connector is properly grounded. The ground connection must be bonded in the upstream power supply for proper operation. Check all physical connections,including the wire box terminals, electric panel(s), and wire box.In residential power supplies,check the bond between ground and neutral at the main panel. If connected to a step-down transformer, contact the transformer's manufacturer for direction on how to bond the ground connection.

8. Packing List

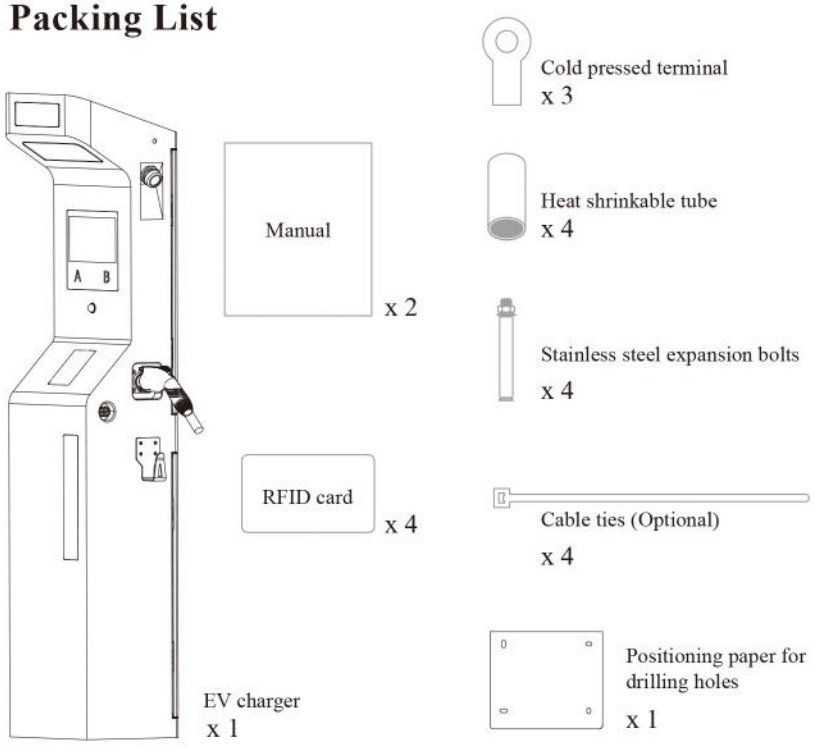

9. Tools and Materials Required

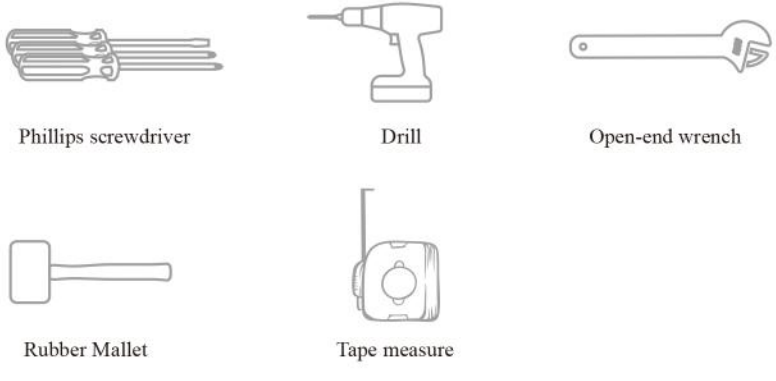

10. Installation Steps

Step1: Mainpart Installation/ Network Configuration.

As shown in Figure 1, please use the positioning paper, to drill four 0.47in diameter holes at corresponding positions of the cement pile with a drill.

Screw down the nuts and spacers of the expansion bolts, put the main body of the charging station onto the cement pile, and open the door of the operation area at the lower part of the station; let the 4 expansion screws go through the holes correspondingly; make sure that the cable is threaded through the hole in the middle of the base; and lock the nuts and spacers tightly.

* (Optional) Use Ethernet for Communication: Pass the Ethenet cable through the hole along with hardwire cable, connect Ethenet cable to the port. (Figure 2)

* (Optional) Use 4G for Communication: Insert Micro SIM card in the slot to access 4G net. (Figure 2)

After the main body installation is completed, Please insert the charging connector into the connector holder on the front side of the EV charging station.

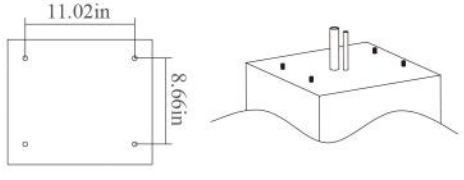

Figure 1

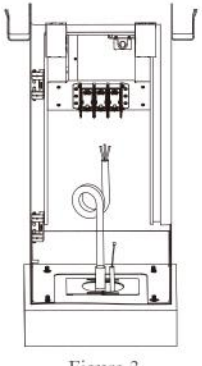

Figure 3

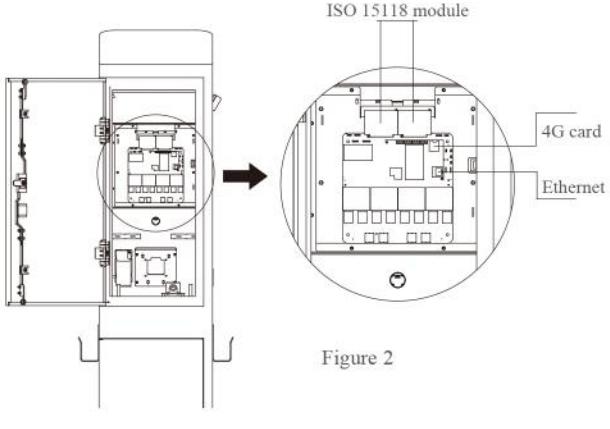

Figure 2

STEP2: Electrical Connection of Charging Stations

Use cold pressed terminal and heat shrinkable tubes to connect the wires to the terminal block, as shown in Figure 5.

Close the hole as tight as possible by adjusting the inlet protection plate, and use foam sealant to seal it if needed.

NOTE: AWG: 2×(1/0)AWG+1×2AWG 9.0N·m, ≥600V, ≥105°C copper wire.

Optional: UL3512(200°C), UL3530(150°C/200°C), UL3386(105°C), UL3321(150°C), UL3271(125°C), UL3289(150°C)

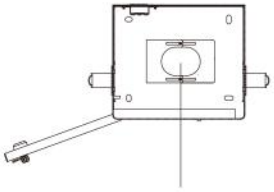

The entrance of the input wire

Figure 4

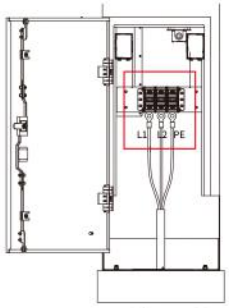

Figure 5

STEP 3. Energized Test

Turn on the air circuit-breaker and confirm the charger is charging properly.

Your EV charger now is ready to charge your vehicle.

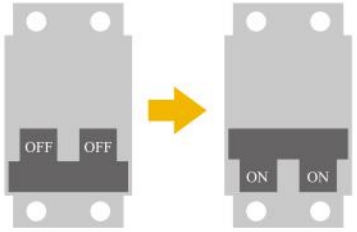

11. Operating Instructions

Floodlight

The charger has night mode. The light can be automatically triggered by photocell sensor. When the surrounding environment becomes dark and the light is unclear, the illuminated sign will light up until dawn.

Automatically light up the floodlight when the PIR sensor detects proximity movement.

- When motion detected, it 100% light up;
- When no movements, it only 30% light up;

After 1 hour without any movements, it will totally turn dark, 0% light up.

LCD SCREEN

1. Booting

Display the EV charger serial number and service contact number.

2. Remind to plug in the gun for charging

Remind to insert the charging gun.

Display the EV charger serial number and service number.

3. After plug in the gun, prompted to scan the QR code

Status 1: Plug in gun A, prompt to scan code A

Status 2: Plug in gun B, prompt to scan code B

Status 3: Guns A and B are pluged in at the same time, prompting 2 QR codes for A and B.

4. Charging

After scanning the code, the charging station start to charge, and the screen display the bottom-to-top running animation.

Cyclic Charging Animation

5. Charging Complete

"√" and "Complete" means charging complete.

After pulling out the charging gun from EV, screen displays the data of this charging, to check invoice.

★ Failures Occur

The status of the charger appears "!"

Error message and error code appear, check the error code to understand the error situation.

Common Fault Quick Query

Single Fault Code Definition		Combination Fault Code Definition	
0001	Not Grounded	0033	Not Grounded and Meter Fault
0002	Relay Sticking	0048	Input Under Voltage and Meter Fault
0004	Over Current	0065	Not Grounded and Emergency Stop
0008	Input Over Voltage	0066	Relay Sticking and Emergency Stop
0016	Input Under Voltage	0072	Input Over Voltage and Emergency Stop
0032	Electric Meter Fault	0080	Input Under Voltage and Emergency Stop
0064	Emergency Stop	0096	Meter Fault and Emergency Stop
0128	CP Error	0192	Meter Fault and CP Error

12. MAINTENANCE AND REPAIR

12.1 Daily Maintenance

Please keep the charger clean and keep the charger in a dean area with low humidity. Do not install it in an environment near the sea,with high oil, high humidity or high dust.

1.Avoid moisture or water in the charger. If water or excess moisture gets into the charger, immediately power off the charger to avoid immediate danger. Proceed to contact the appropriate maintenance personnel before the next use.

2.If there is any damage on the vehicle connector, charging cable, or vehicle connector holder, please contact the maintenance personnel immediately.

3.Please use the charger correctly. Do not hit or press hard on the case if the case is damaged, please contact a professional technician.

4.Avoid placing the charger near hot objects and at high temperature locations and away from dangerous substances such as flammable gases and corrosive materials.

5.Do not place external objects or heavy objects on the charger to avoid danger.

WARNING: Turn off input power at the circuit breaker before cleaning the charger.

WARNING: Do not use cleaning solvents, scouring, powder, or any type of abrasive pad to clean the charger, its charging cable, or the vehicle's charging port.

CAUTION: To reduce the risk of electrical shock or equipment damage, do not allow liquid to enter the charger while cleaning it.

12.2 Warranty and Maintenance

1.The warranty period for this charger is 2 years and covers parts only.

2.During the warranty period, if any malfunction is caused by regular use in accordance with the user manual and service instructions, the parts shall be repaired free of charge. Except for the following situations, the charger shall be subject to the above warranty terms:

- Unable to provide valid proof of purchase.
- Product that is out of warranty.

3.Those who damage the product due to not following the product service instruction for use, maintenance and storage.

4.Damage or contamination caused by the entry of foreign objects.

5.Unauthorized repair, disassembly or modification.

6.Damage caused by force majeure (such as lightning, excessive voltage, earthquake, fire, flood, etc.)

7.Malfunction and damage caused by other unavoidable external factors. Malfunction and damage caused by improper use of equipment, such as water or other solutions entering into the equipment.

8.Malfunction and damage caused by the grid power supply and voltage which is not specified for use with the charger equipment.

13. Service

Need more assistance? Contact Customer Service.

+86 0592-7263768

*******@*******.com.cn