FCC CFR47 PART 22H, 24E, 27, 90S CERTIFICATION TEST REPORT

FCC ID: 2A9FT-Z400-H

Product: Smart LTE Module

Trade Mark: ZelusTek

Model No.: Z400-H

Family Model: Z400-H(A), Z400-H(EU)

Report No.: S23033100205006

Issue Date: May 05, 2023

Prepared for

Zelus (Shenzhen) Technology Ltd.

503, Building No.4, Block No.1, Shenzhen Bay ECO-Technology Park,
No.22, Gaoxin Nanhuan Road, Nanshan District, Shenzhen, China

Prepared by

Shenzhen NTEK Testing Technology Co., Ltd.

1/F, Building E, Fenda Science Park, Sanwei Community,
Xixiang Street Bao'an District, Shenzhen 518126 P.R. China
Tel. 400-800-6106, 0755-2320 0050, 0755-2320 0090
Website: http://www.ntek.org.cn

TEST RESULT CERTIFICATION

Applicant's name ..... : Zelus (Shenzhen) Technology Ltd.

Address..... : 503, Building No.4, Block No.1, Shenzhen Bay ECO-Technology Park, No.22, Gaoxin Nanhuan Road, Nanshan District, Shenzhen, China

Manufacturer's Name..... : Zelus (Shenzhen) Technology Ltd.

Address..... : 503, Building No.4, Block No.1, Shenzhen Bay ECO-Technology Park, No.22, Gaoxin Nanhuan Road, Nanshan District, Shenzhen, China

Product name..... : Smart LTE Module

Trade Mark..... : ZelusTek

Model and/or type reference .. : Z400-H

Family Model..... : Z400-H(A), Z400-H(EU)

Test Sample Number ..... : S230331002006

Standards..... : FCC CFR 47 Part 22H, Part 24E, Part 27, Part 90S

Test procedure ..... ANSI C63.26:2015

ANSI/TIA-603-E-2016

This device described above has been tested by NTEK, and the test results show that the equipment under test (EUT) is in compliance with the FCC requirements. And it is applicable only to the tested sample identified in the report.

This report shall not be reproduced except in full, without the written approval of NTEK, this document may be altered or revised by NTEK, personal only, and shall be noted in the revision of the document.

Date of Test .....

Date (s) of performance of tests..... Apr 03, 2023 ~ May 05, 2023

Date of Issue..... May 05, 2023

Test Result..... **Pass**

Testing Engineer : Mukzi Lee

(Mukzi Lee)

Authorized Signatory : Alex

(Alex Li)

TABLE OF CONTENTS

1. GENERAL INFORMATION....6

1. GENERAL INFORMATION....6

1.1 PRODUCT DESCRIPTION....6

1.2 RELATED SUBMITTAL(S) / GRANT (S)....8

1.3 TEST METHODOLOGY....8

1.4 TEST FACILITY....8

MEASUREMENT UNCERTAINTY....8

1.5 SPECIAL ACCESSORIES....8

1.6 WORST-CASE CONFIGURATION AND MODE....8

2. SYSTEM TEST CONFIGURATION....9

2.1 EUT CONFIGURATION....9

2.2 EUT EXERCISE....9

2.3 CONFIGURATION OF EUT SYSTEM....9

2.4 TEST SETUP....10

3.TEST AND MEASUREMENT EQUIPMENT....11

4. OUTPUT POWER....13

4.1 OUTPUT POWER MEASUREMENT....13

6. BANDEDGE AND EMISSION MASK....16

7. OUT OF BAND EMISSIONS....18

7.1 MEASUREMENT METHOD....18

8. RADIATED MEASUREMENT....19

8.1. RADIATED POWER (ERP & EIRP)....19

8.2 LTE BAND 2....20

8.3 LTE BAND 4 23
8.4 LTE BAND 5 26
8.5 LTE BAND 7 28
8.6 LTE BAND 12 30
8.7 LTE BAND 13 32
8.7 LTE BAND 14 34
8.8 LTE BAND 17 36
8.9 LTE BAND 25 38
8.10 LTE BAND 26 A 41
8.11 LTE BAND 26B 43
8.12 LTE BAND 38 45
8.13 LTE BAND 41 47
8.14 LTE BAND 66 49
8.15 LTE BAND 71 52
9. SPURIOUS RADIATION EMISSION 54
9.1 LTE BAND 2 56
9.2 LTE BAND 4 58
9.3 LTE BAND 5 60
9.4 LTE BAND 7 62
9.5 LTE BAND 12 64
9.6 LTE BAND 13 66
9.7 LTE BAND 14 68
9.8 LTE BAND 17 70
9.9 LTE BAND 25 72
9.10 LTE BAND 26A 74
9.11 LTE BAND 26B 76
9.12 LTE BAND 38 78
9.13 LTE BAND 41 80
9.14 LTE BAND 66 82

9.15 LTE BAND 71 84

10. FREQUENCY STABILITY 86

10.1 LTE BAND 2 87

10.2 LTE BAND 4 89

10.3 LTE BAND 5 91

10.4 LTE BAND 7 93

10.5 LTE BAND 12 95

10.6 LTE BAND 13 97

10.7 LTE BAND 14 99

10.8 LTE BAND 17 101

10.9 LTE BAND 25 103

10.10 LTE BAND 26A 105

10.11 LTE BAND 26B 107

10.12 LTE BAND 38 109

10.13 LTE BAND 41 111

10.14 LTE BAND 66 113

10.15 LTE BAND 71 115

11. PEAK-TO-AVERAGE RATIO 117

11.1 Description of the PAR Measurement 117

11.2 Measuring Instruments 117

11.3 Test Procedures 117

11.4 Test Setup 118

1. GENERAL INFORMATION

1.1 PRODUCT DESCRIPTION

A major technical description of EUT is described as following:

Product Designation:	Smart LTE Module
Trade Mark	ZelusTek
Model Name	Z400-H
Family Model	Z400-H(A), Z400-H(EU)
Model Difference	All the model are the same circuit and RF module,except the model name.
FCC ID:	2A9FT-Z400-H
Frequency Bands:	U.S. Bands: ☒LTE FDD Band 2,4,5,7,12,13,14,17,25,26 LTE TDD Band 38,41,66,71
Frequency Range:	LTE FDD Band 2 Uplink: 1850MHz-1910MHz, Downlink: 1930MHz-1990MHz; LTE FDD Band 4 Uplink: 1710MHz-1755MHz, Downlink: 2110MHz-2155MHz; LTE FDD Band 5 Uplink: 824MHz-849MHz, Downlink: 869MHz-894MHz; LTE-FDD Band 7 Uplink: 2500MHz-2570MHz, Downlink: 2620MHz-2690MHz; LTE FDD Band 12 Uplink: 699MHz-716MHz, Downlink: 729MHz-746MHz; LTE FDD Band 13 Uplink: 777MHz-787MHz, Downlink: 746MHz-756MHz; LTE FDD Band 14 Uplink: 788MHz-798MHz, Downlink: 758MHz-768MHz; LTE FDD Band 17 Uplink: 704MHz-716MHz, Downlink: 734MHz-746MHz; LTE FDD Band 25 Uplink: 1850MHz-1915MHz, Downlink: 1930MHz-1995MHz; LTE FDD Band 26A Uplink: 814MHz-824MHz, Downlink: 859MHz-869MHz; LTE FDD Band 26B Uplink: 824MHz-849MHz, Downlink: 869MHz-894MHz; LTE TDD Band 38 Uplink & Downlink: 2570 MHz to 2620 MHz LTE TDD Band 41 Uplink & Downlink: 2535MHz-2655MHz, LTE TDD Band 66 Uplink: 1710MHz-1780MHz, Downlink: 2110MHz-2200MHz; LTE TDD Band 71 Uplink: 663MHz-698MHz, Downlink: 617MHz-652MHz;
Type of Modulation:	QPSK/16QAM/64QAM(Only Downlink)

Antenna:	External Antenna
Antenna gain:	1 dBi;
Adapter	N/A
Battery	N/A
Power supply	DC 4V
Extreme Vol. Limits:	DC 3.5V to DC 4.4V (Nominal DC 4.0V)（Note 1）
HW Version	Z400-H V3.0
SW Version	N/A
** Note1: The High Voltage DC 4.4V and Low Voltage DC 3.5V was declared by manufacturer, The EUT couldn't be operate normally with higher or lower voltage.	

1.2 RELATED SUBMITTAL(S) / GRANT (S)

This submittal(s) (test report) is intended for **FCC ID: 2A9FT-Z400-H** filing to comply with the FCC Part 22H&24E&27&90S.

1.3 TEST METHODOLOGY

The tests documented in this report were performed in accordance with ANSI/TIA-603-E-2016, FCC CFR 47 Part 2, Part 22, Part 24, Part 27, Part 90S,ANSI C63.26:2015.

1.4 TEST FACILITY

The test site used to collect the radiated data is located at:

ShenZhen NTEK Testing Technology Co., Ltd.

1/F, Building E, Fenda Science Park, Sanwei Community, Xixiang Street, Bao'an District, Shenzhen 518126 P.R.China.

The test site is constructed and calibrated to meet the FCC requirements in documents ANSI C63.26:2015& ANSI C63.4: 2014.

FCC Registration No.:463705

IC Registration No.:9270A-1,

CNAS Registration No.:L5516

MEASUREMENT UNCERTAINTY

The reported uncertainty of measurement, where expended uncertainty U is based on a standard uncertainty multiplied by a coverage factor of k=2, providing a level of confidence of approximately 95 %.

No.	Item	Uncertainty
1	Measuring Uncertainty for a Level of Confidence of 95% (U = 2Uc(y))	2.5dB

1.5 SPECIAL ACCESSORIES

The battery and the charger, earphone supplied by the applicant were used as accessories and being tested with EUT intended for FCC grant together.

1.6 WORST-CASE CONFIGURATION AND MODE

The worst-case scenario for all measurements is based on the investigation results.

The device has LTE Bands of: Band 2/4/5/7/12/13/14/17/25/26/38/41/66/71

The RB Size was selected to measure for peak or average ERP and EIRP, which was based on the conducted power verification baseline data.

For the fundamental investigation of radiated emissions, the EUT is investigated for vertical and horizontal antenna orientations and X Y and Z orientations of the EUT alone. After the investigations the worst case was determined to be at X orientation for all LTE bands.

2. SYSTEM TEST CONFIGURATION

2.1 EUT CONFIGURATION

The EUT configuration for testing is installed on RF field strength measurement to meet the Commission's requirement and operating in a manner which intends to maximize its emission characteristics in a continuous normal application.

2.2 EUT EXERCISE

The Transmitter was operated in the maximum output power mode through Communication Tester. The TX frequency was fixed which was for the purpose of the measurements.

2.3 CONFIGURATION OF EUT SYSTEM

Table 2-1 Equipment Used in EUT System

Item	Equipment	Model No.	ID or Specification	Note
1	Smart LTE Module	Z400-H	FCC ID: 2A9FT-Z400-H	EUT

Note: All the accessories have been used during the test.
the following "EUT" in setup diagram means EUT system.

2.4 TEST SETUP

For Radiated Test Cases

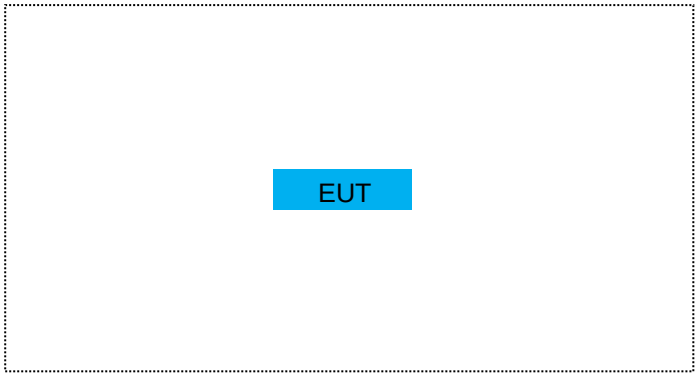

For Conducted Output Power

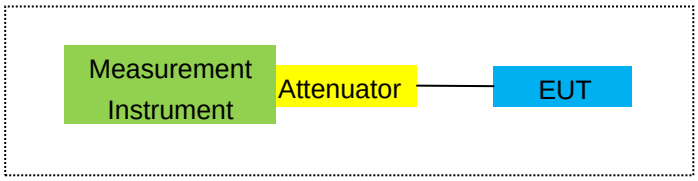

For Peak-to Average Ratio, Occupied Bandwidth, Conducted Band edge and Conducted Spurious Emission

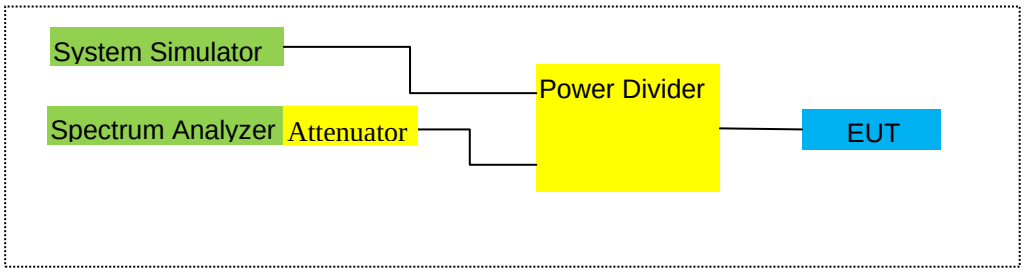

For Frequency Stability

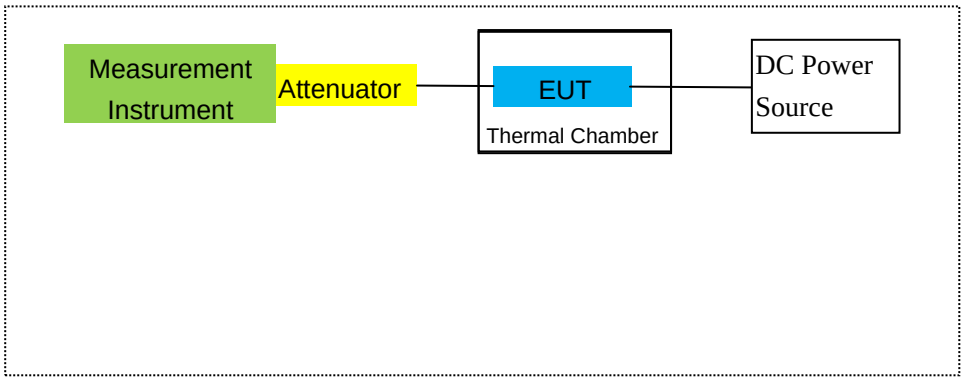

Note: EUT built-in battery-powered, the battery is fully-charged.

3.TEST AND MEASUREMENT EQUIPMENT

The following test and measurement equipment was utilized for the tests documented in this report:

Item	Kind of Equipment	Manufacturer	Type No.	Serial No.	Last calibration	Calibrated until	Calibration period
1	MXA Signal Analyzer	Agilent	N9020A	MY49100060	2022.06.16	2023.06.17	1 year
2	Test Receiver	R&S	ESPI	101318	2023.03.27	2024.03.26	1 year
3	Bilog Antenna	TESEQ	CBL6111D	31216	2023.03.16	2024.03.15	1 year
4	50Ω Coaxial Switch	Anritsu	MP59B	6200983705	2020.05.11	2023.05.10	3 year
5	Horn Antenna	SCHWARZBECK	BBHA 9120 D	2816	2023.01.12	2024.01.11	1 year
6	Horn Ant	Schwarzbeck	BBHA 9170	9170-181	2022.11.07	2023.11.06	1 year
7	Amplifier	EM	EM-30180	060538	2022.06.17	2023.06.16	1 year
8	Loop Antenna	ARA	PLA-1030/B	1029	2022.11.04	2023.11.05	1 year
9	Power Meter	R&S	NRVS	100696	2022.06.17	2023.06.16	1 year
10	Power Sensor	R&S	URV5-Z4	0395.1619.05	2022.06.17	2023.06.16	1 year
11	Test Cable	N/A	R-01	N/A	2022.06.17	2025.06.16	3 year
12	Test Cable	N/A	R-02	N/A	2022.06.17	2025.06.16	3 year
13	Test Cable	N/A	R-03	N/A	2022.06.17	2025.06.16	3 year
14	Test Receiver	R&S	ESCI	101160	2023.03.27	2024.03.26	1 year
15	LISN	R&S	ENV216	101313	2023.03.27	2024.03.26	1 year
16	LISN	EMCO	3816/2	00042990	2023.03.27	2024.03.26	1 year
17	50Ω Coaxial Switch	Anritsu	MP59B	6200264417	2023.03.27	2024.03.27	1 year
18	Passive Voltage Probe	R&S	ESH2-Z3	100196	2023.03.27	2024.03.26	1 year
19	Test Cable	N/A	C01	N/A	2020.05.11	2023.05.10	3 year
20	Test Cable	N/A	C02	N/A	2020.05.11	2023.05.10	3 year
21	Test Cable	N/A	C03	N/A	2020.05.11	2023.05.10	3 year
22	Spectrum Analyzer	agilent	e4440a	us44300399	2023.03.27	2024.03.26	1 year
23	test receiver	R&S	ESCI	a0304218	2022.06.16	2023.06.15	1 year
24	Communication Tester	R&S	CMU200	A0304247	2022.06.16	2023.06.15	1 year
25	Thermal Chamber	Ten Billion	TTC-B3C	TBN-960502	2023.03.27	2024.03.26	1 year

26	DC Power Source	N/A	PS-6005D	20170402923	2020.05.11	2023.05.10	3 year
27	MXG Vector Signal Generator	Agilent	N5182A	MY47070317	2022.06.16	2023.06.15	1 year
28	Communication Tester	R&S	CMW500	148500	2022.06.16	2023.06.15	1 year

Note: Each piece of equipment is scheduled for calibration once a year except the Test Cable& DC Power Source which is scheduled for calibration every 3 years.

4. OUTPUT POWER

4.1 OUTPUT POWER MEASUREMENT

LTE Measurement Procedure:

All LTE bands conducted power peak and average are obtained from the CMW500 telecommunication test set. The following tests were conducted according to the test requirements outlined in section 6.2 of the 3GPP TS36.101 specification.

UE Power Class: 3 (23 +/- 2dBm). The allowed Maximum Power Reduction (MPR) for the maximum output power due to higher order modulation and transmit bandwidth configuration (resource blocks) is specified in Table 6.2.3-1 of the 3GPP TS36.101.

Table 6.2.3-1: Maximum Power Reduction (MPR) for Power Class 3

Modulation	Channel bandwidth / Transmission bandwidth (RB)						MPR (dB)
	1.4 MHz	3.0 MHz	5 MHz	10 MHz	15 MHz	20 MHz	
QPSK	> 5	> 4	> 8	> 12	> 16	> 18	≤ 1
16 QAM	≤ 5	≤ 4	≤ 8	≤ 12	≤ 16	≤ 18	≤ 1
16 QAM	> 5	> 4	> 8	> 12	> 16	> 18	≤ 2

The allowed A-MPR values specified below in Table 6.2.4.-1 of 3GPP TS36.101 are in addition to the allowed MPR requirements. All the measurements below were performed with A-MPR disabled, by using Network Signaling Value of “NS_01”.3

Table 6.2.4-1: Additional Maximum Power Reduction (A-MPR)

Network Signalling value	Requirements (sub-clause)	E-UTRA Band	Channel bandwidth (MHz)	Resources Blocks (N_{RB})	A-MPR (dB)
NS_01	6.6.2.1.1	Table 5.5-1	1.4, 3, 5, 10, 15, 20	Table 5.6-1	NA
NS_03	6.6.2.2.1	2, 4,10, 23, 25, 35, 36	3	>5	≤ 1
			5	>6	≤ 1
			10	>6	≤ 1
			15	>8	≤ 1
			20	>10	≤ 1
NS_04	6.6.2.2.2	41	5	>6	≤ 1
			10, 15, 20	See Table 6.2.4-4	
NS_05	6.6.3.3.1	1	10,15,20	≥ 50	≤ 1
NS_06	6.6.2.2.3	12, 13, 14, 17	1.4, 3, 5, 10	Table 5.6-1	n/a
NS_07	6.6.2.2.3 6.6.3.3.2	13	10	Table 6.2.4-2	Table 6.2.4-2
NS_08	6.6.3.3.3	19	10, 15	> 44	≤ 3
NS_09	6.6.3.3.4	21	10, 15	> 40	≤ 1
				> 55	≤ 2
NS_10		20	15, 20	Table 6.2.4-3	Table 6.2.4-3
NS_11	6.6.2.2.1	23[1]	1.4, 3, 5, 10	Table 6.2.4-5	Table 6.2.4-5
--					
NS_32	-	-	-	-	-
Note 1: Applies to the lower block of Band 23, i.e. a carrier placed in the 2000-2010 MHz region.					

Test data reference attachment.

5. OCCUPIED BANDWIDTH

RULE PART(S)

FCC: §2.1049

LIMITS

For reporting purposes only

TEST PROCEDURE

The transmitter output was connected to a calibrated coaxial cable and coupler, the other end of which was connected to a spectrum analyzer. The occupied bandwidth was measured with the spectrum analyzer at the low, middle and high channel in each band. The -26dB bandwidth was also measured and recorded.

MODES TESTED

LTE Band 2/4/5/7/12/13/14/17/25/26/38/41/66/71

RESULTS

PASS

Test data reference attachment.

6. BANDEDGE AND EMISSION MASK

RULE PART(S)

FCC: §2.1051, §22.901, §22.917, §24.238, §27.53, and §90.691
FCC: §22.359

LIMITS

FCC: §22.917, §24.238, §27.53
The power of any emission outside of the authorized operating frequency ranges must be attenuated below the transmitting power (P) by a factor of at least 43 + 10 log (P) dB.

(m)(4) For mobile digital stations, the attenuation factor shall be not less than 40 + 10 log (P) dB on all frequencies between the channel edge and 5 megahertz from the channel edge, 43 + 10 log (P) dB on all frequencies between 5 megahertz and X megahertz from the channel edge, and 55 + 10 log (P) dB on all frequencies more than X megahertz from the channel edge, where X is the greater of 6 megahertz or the actual emission bandwidth as defined in paragraph (m)(6) of this section. In addition, the attenuation factor shall not be less that 43 + 10 log (P) dB on all frequencies between 2490.5 MHz and 2496 MHz and 55 + 10 log (P) dB at or below 2490.5 MHz. Mobile Satellite Service licensees operating on frequencies below 2495 MHz may also submit a documented interference complaint against BRS licensees operating on channel BRS Channel 1 on the same terms and conditions as adjacent channel BRS or EBS licensees.Show citation box.
(c)(4) On all frequencies between 763-775 MHz and 793-805 MHz, by a factor not less than 65 + 10 log (P) dB in a 6.25 kHz band segment, for mobile and portable stations;

FCC: §90.691 Emission mask requirements for EA-based systems.
(a) Out-of-band emission requirement shall apply only to the “outer” channels included in an EA license and to spectrum adjacent to interior channels used by incumbent licensees. The emission limits are as follows:
(1) For any frequency removed from the EA licensee's frequency block by up to and including 37.5 kHz, the power of any emission shall be attenuated below the transmitter power (P) in watts by at least 116 Log10(f/6.1) decibels or 50 + 10 Log10(P) decibels or 80 decibels, whichever is the lesser attenuation, where f is the frequency removed from the center of the outer channel in the block in kilohertz and where f is greater than 12.5 kHz.
(2) For any frequency removed from the EA licensee's frequency block greater than 37.5 kHz, the power of any emission shall be attenuated below the transmitter power (P) in watts by at least 43 + 10Log10(P) decibels or 80 decibels, whichever is the lesser attenuation, where f is the frequency removed from the center of the outer channel in the block in kilohertz and where f is greater than 37.5 kHz.

TEST PROCEDURE

The transmitter output was connected to a CMW500 Test Set and configured to operate at maximum power. The band edge emissions were measured at the required operating frequencies in each band on the Spectrum Analyzer.

For each band edge measurement:

Set the spectrum analyzer span to include the block edge frequency

Set a marker to point the corresponding band edge frequency in each test case.

Set resolution bandwidth to at least 1% of emission bandwidth.

MODES TESTED

LTE Band 2/4/5/7/12/13/14/17/25/26/38/41/66/71

RESULTS

Test data reference attachment.

7. OUT OF BAND EMISSIONS

RULE PART(S)

FCC: §2.1051, §22.901, §22.917, §24.238, §27.53 and §90.691

LIMITS

1. The power of any emission outside of the authorized operating frequency ranges must be attenuated below the transmitting power (P) by a factor of at least 43 + 10 log (P) dB.
2. The Band 7/41 emission outside of the authorized operating frequency ranges must be attenuated below the transmitting power (P) by a factor of at least 55 + 10 log (P) dB.

TEST PROCEDURE

The RF output of the transmitter was connected to a spectrum analyzer through a calibrated coaxial cable. Sufficient scans were taken to show the out-of-band Emissions, if any, up to 10th harmonic. Multiple sweeps were recorded in maximum hold mode using a peak detector to ensure that the worst-case emissions were caught.

For each out of band emissions measurement:

-
- Set RBW & VBW to 100 kHz for the measurement below 1 GHz, and 1 MHz for the measurement above 1 GHz.

MODES TESTED

- LTE Band 2/4/5/7/12/13/14/17/25/26/38/41/66/71

-

7.1 MEASUREMENT METHOD

The test set up and general procedure is similar to conducted peak output power test. Only different for setting the measurement configuration of the measuring instrument of Spectrum Analyzer.

Test data reference attachment.

8. RADIATED MEASUREMENT

8.1. RADIATED POWER (ERP & EIRP)

RULE PART(S)

FCC: §2.1046, §22.913, §24.232, §27.50 and §90.635

LIMITS:

22.913(a) - The ERP of mobile transmitters and auxiliary test transmitters must not exceed 7 Watts.
27.50 (c) (10) the following power and antenna height requirements apply to stations transmitting in the 698–746 MHz band, the portable stations (hand-held devices) are limited to 3 watts ERP.
27.50 (b)(10) Portable stations (hand-held devices) transmitting in the 746–757 MHz, 758–763 MHz, 776–793 MHz, and 805–806 MHz bands are limited to 3 watts ERP.
27.50 (d)(4) The following power and antenna height requirements apply to stations transmitting in the 1710–1755 MHz and 2110–2155 MHz bands: Fixed, mobile, and portable (hand-held) stations operating in the 1710–1755 MHz band are limited to 1 watt EIRP.
27.50 (h)(2) Mobile and other user stations. Mobile stations are limited to 2.0 watts EIRP. All user stations are limited to 2.0 watts transmitter output power.
90.635(b) The maximum output power of the transmitter for mobile stations is 100 watts (20 dBw).

TEST PROCEDURE

ANSI/TIA-603-E Clause 2.2.17
KDB 971168 v02r01 RF power output using broadband peak and average power meter method.
KDB 971168 D01 Power Meas License Digital Systems v02r01, “Measurement Guidance for Certification of Licensed Digital Transmitters”

MODES TESTED

LTE Band 2/4/5/7/12/13/14/17/25/26/38/41/66/71

RESULTS

Pass

8.2 LTE BAND 2

Radiated Power (EIRP) for Band 2									
Mode	RB/RB SIZE	Frequency	Result						Conclusion
			SG Level (dBm)	Cable Loss (dBm)	Factor (dB)	Max. EIRP Average (dBm)	Max. EIRP Average (mW)	Polarization Of Max. ERP	
1.4MHz Band QPSK	1/#Mid	1850.7	-1.68	3.76	28.24	22.80	190.546	Horizontal	Pass
		1880	-1.59	3.91	28.22	22.72	187.068	Horizontal	Pass
		1909.3	-1.48	3.93	28.20	22.79	190.108	Horizontal	Pass
3.0MHz Band QPSK	1/#Mid	1851.5	-1.76	3.77	28.23	22.70	186.209	Horizontal	Pass
		1880	-1.60	3.91	28.24	22.73	187.499	Horizontal	Pass
		1908.5	-1.55	3.94	28.25	22.76	188.799	Horizontal	Pass
5.0MHz Band QPSK	1/#Mid	1852.5	-1.88	3.77	28.31	22.66	184.502	Horizontal	Pass
		1880	-1.61	3.91	28.22	22.70	186.209	Horizontal	Pass
		1907.5	-1.50	3.94	28.20	22.76	188.799	Horizontal	Pass
10.0MHz Band QPSK	1/#Mid	1855	-1.74	3.79	28.33	22.80	190.546	Horizontal	Pass
		1880	-1.49	3.95	28.22	22.78	189.671	Horizontal	Pass
		1905	-1.43	3.97	28.19	22.79	190.108	Horizontal	Pass
15.0MHz Band QPSK	1/#Mid	1857.5	-1.91	3.79	28.34	22.64	183.654	Horizontal	Pass
		1880	-1.52	3.95	28.22	22.75	188.365	Horizontal	Pass
		1902.5	-1.42	3.97	28.18	22.79	190.108	Horizontal	Pass
20.0MHz Band QPSK	1/#Mid	1860	-1.88	3.81	28.35	22.66	184.502	Horizontal	Pass
		1880	-1.49	3.96	28.22	22.77	189.234	Horizontal	Pass
		1900	-1.52	4.00	28.16	22.64	183.654	Horizontal	Pass
1.4MHz Band QPSK	1/#Mid	1850.7	-1.74	3.76	28.24	22.74	187.932	Vertical	Pass
		1880	-1.62	3.91	28.22	22.69	185.780	Vertical	Pass
		1909.3	-1.48	3.93	28.20	22.79	190.108	Vertical	Pass
3.0MHz Band QPSK	1/#Mid	1851.5	-1.80	3.77	28.23	22.66	184.502	Vertical	Pass
		1880	-1.67	3.91	28.24	22.66	184.502	Vertical	Pass
		1908.5	-1.65	3.94	28.25	22.66	184.502	Vertical	Pass
5.0MHz Band QPSK	1/#Mid	1852.5	-1.84	3.77	28.31	22.70	186.209	Vertical	Pass
		1880	-1.57	3.91	28.22	22.74	187.932	Vertical	Pass
		1907.5	-1.49	3.94	28.20	22.77	189.234	Vertical	Pass
10.0MHz Band QPSK	1/#Mid	1855	-1.82	3.79	28.33	22.72	187.068	Vertical	Pass
		1880	-1.53	3.95	28.22	22.74	187.932	Vertical	Pass
		1905	-1.49	3.97	28.19	22.73	187.499	Vertical	Pass

15.0MHz Band QPSK	1/#Mid	1857.5	-1.80	3.79	28.34	22.75	188.365	Vertical	Pass
		1880	-1.57	3.95	28.22	22.70	186.209	Vertical	Pass
		1902.5	-1.55	3.97	28.18	22.66	184.502	Vertical	Pass
20.0MHz Band QPSK	1/#Mid	1860	-1.73	3.81	28.35	22.81	190.985	Vertical	Pass
		1880	-1.44	3.96	28.22	22.82	191.426	Vertical	Pass
		1900	-1.33	4.00	28.16	22.83	191.867	Vertical	Pass

Radiated Power (EIRP) for Band 2									
Mode	RB/RB SIZE	Frequency	Result						Conclusion
			SG Level (dBm)	Cable Loss (dBm)	Factor (dB)	Max. EIRP Average (dBm)	Max. EIRP Average (mW)	Polarization Of Max. ERP	
1.4MHz Band 16 QAM	1/#Mid	1850.7	-2.47	3.76	28.24	22.01	158.855	Horizontal	Pass
		1880	-2.32	3.91	28.22	21.99	158.125	Horizontal	Pass
		1909.3	-2.28	3.93	28.20	21.99	158.125	Horizontal	Pass
3.0MHz Band 16 QAM	1/#Mid	1851.5	-2.40	3.77	28.23	22.06	160.694	Horizontal	Pass
		1880	-2.27	3.91	28.24	22.06	160.694	Horizontal	Pass
		1908.5	-2.25	3.94	28.25	22.06	160.694	Horizontal	Pass
5.0MHz Band 16 QAM	1/#Mid	1852.5	-2.60	3.77	28.31	21.94	156.315	Horizontal	Pass
		1880	-2.33	3.91	28.22	21.98	157.761	Horizontal	Pass
		1907.5	-2.31	3.94	28.20	21.95	156.675	Horizontal	Pass
10.0MHz Band 16 QAM	1/#Mid	1855	-2.44	3.79	28.33	22.10	162.181	Horizontal	Pass
		1880	-2.23	3.95	28.22	22.04	159.956	Horizontal	Pass
		1905	-2.21	3.97	28.19	22.01	158.855	Horizontal	Pass
15.0MHz Band 16 QAM	1/#Mid	1857.5	-2.47	3.79	28.34	22.08	161.436	Horizontal	Pass
		1880	-2.33	3.95	28.22	21.94	156.315	Horizontal	Pass
		1902.5	-2.13	3.97	28.18	22.08	161.436	Horizontal	Pass
20.0MHz Band 16 QAM	1/#Mid	1860	-2.49	3.81	28.35	22.05	160.325	Horizontal	Pass
		1880	-2.28	3.96	28.22	21.98	157.761	Horizontal	Pass
		1900	-2.22	4.00	28.16	21.94	156.315	Horizontal	Pass
1.4MHz Band 16 QAM	1/#Mid	1850.7	-2.50	3.76	28.24	21.98	157.761	Vertical	Pass
		1880	-2.28	3.91	28.22	22.03	159.588	Vertical	Pass
		1909.3	-2.27	3.93	28.20	22.00	158.489	Vertical	Pass
3.0MHz Band 16 QAM	1/#Mid	1851.5	-2.49	3.77	28.23	21.97	157.398	Vertical	Pass
		1880	-2.33	3.91	28.24	22.00	158.489	Vertical	Pass
		1908.5	-2.36	3.94	28.25	21.95	156.675	Vertical	Pass
5.0MHz	1/#Mid	1852.5	-2.53	3.77	28.31	22.01	158.855	Vertical	Pass

Band 16 QAM		1880	-2.24	3.91	28.22	22.07	161.065	Vertical	Pass
		1907.5	-2.33	3.94	28.20	21.93	155.955	Vertical	Pass
10.0MHz Band 16 QAM	1/#Mid	1855	-2.48	3.79	28.33	22.06	160.694	Vertical	Pass
		1880	-2.30	3.95	28.22	21.97	157.398	Vertical	Pass
		1905	-2.27	3.97	28.19	21.95	156.675	Vertical	Pass
15.0MHz Band 16 QAM	1/#Mid	1857.5	-2.60	3.79	28.34	21.95	156.675	Vertical	Pass
		1880	-2.18	3.95	28.22	22.09	161.808	Vertical	Pass
		1902.5	-2.27	3.97	28.18	21.94	156.315	Vertical	Pass
20.0MHz Band 16 QAM	1/#Mid	1860	-2.40	3.81	28.35	22.14	163.682	Vertical	Pass
		1880	-2.15	3.96	28.22	22.11	162.555	Vertical	Pass
		1900	-2.04	4.00	28.16	22.12	162.930	Vertical	Pass

Note:
SG Level= Signal generator output
Max. EIRP Average (dBm)= Antenna Gain(dB)+ SG Level (dBm)- Cable Loss(dBm)
Factor Gain(dB)=Antenna Gain(dB) + Amplifier Factor (dB)

8.3 LTE BAND 4

Radiated Power (EIRP) for Band 4									
Mode	RB/RB SIZE	Frequency	Result						Conclusion
			SG Level (dBm)	Cable Loss (dBm)	Factor (dB)	Max. EIRP Average (dBm)	Max. EIRP Average (mW)	Polarization Of Max. ERP	
1.4MHz Band QPSK	1/#Mid	1710.7	-2.12	3.12	27.58	22.34	171.396	Horizontal	Pass
		1732.5	-1.96	3.27	27.61	22.38	172.982	Horizontal	Pass
		1754.3	-2.00	3.29	27.63	22.34	171.396	Horizontal	Pass
3.0MHz Band QPSK	1/#Mid	1711.5	-2.08	3.13	27.61	22.40	173.780	Horizontal	Pass
		1732.5	-2.02	3.27	27.61	22.32	170.608	Horizontal	Pass
		1753.5	-1.94	3.30	27.62	22.38	172.982	Horizontal	Pass
5.0MHz Band QPSK	1/#Mid	1712.5	-2.16	3.13	27.63	22.34	171.396	Horizontal	Pass
		1732.5	-2.06	3.27	27.61	22.28	169.044	Horizontal	Pass
		1752.5	-2.07	3.30	27.60	22.23	167.109	Horizontal	Pass
10.0MHz Band QPSK	1/#Mid	1715	-2.23	3.15	27.64	22.26	168.267	Horizontal	Pass
		1732.5	-2.03	3.31	27.61	22.27	168.655	Horizontal	Pass
		1750	-1.86	3.33	27.59	22.40	173.780	Horizontal	Pass
15.0MHz Band QPSK	1/#Mid	1717.5	-2.21	3.15	27.65	22.29	169.434	Horizontal	Pass
		1732.5	-2.01	3.31	27.61	22.29	169.434	Horizontal	Pass
		1747.5	-1.99	3.33	27.57	22.25	167.880	Horizontal	Pass
20.0MHz Band QPSK	1/#Mid	1720	-2.12	3.17	27.66	22.37	172.584	Horizontal	Pass
		1732.5	-1.91	3.32	27.61	22.38	172.982	Horizontal	Pass
		1745	-1.92	3.36	27.56	22.28	169.044	Horizontal	Pass
1.4MHz Band QPSK	1/#Mid	1710.7	-2.17	3.12	27.58	22.29	169.434	Vertical	Pass
		1732.5	-1.95	3.27	27.61	22.39	173.380	Vertical	Pass
		1754.3	-2.09	3.29	27.63	22.25	167.880	Vertical	Pass
3.0MHz Band QPSK	1/#Mid	1711.5	-2.08	3.13	27.61	22.40	173.780	Vertical	Pass
		1732.5	-1.96	3.27	27.61	22.38	172.982	Vertical	Pass
		1753.5	-1.99	3.30	27.62	22.33	171.002	Vertical	Pass
5.0MHz Band QPSK	1/#Mid	1712.5	-2.19	3.13	27.63	22.31	170.216	Vertical	Pass
		1732.5	-2.03	3.27	27.61	22.31	170.216	Vertical	Pass
		1752.5	-2.00	3.30	27.60	22.30	169.824	Vertical	Pass
10.0MHz Band QPSK	1/#Mid	1715	-2.20	3.15	27.64	22.29	169.434	Vertical	Pass
		1732.5	-2.05	3.31	27.61	22.25	167.880	Vertical	Pass
		1750	-2.00	3.33	27.59	22.26	168.267	Vertical	Pass

15.0MHz Band QPSK	1/#Mid	1717.5	-2.17	3.15	27.65	22.33	171.002	Vertical	Pass
		1732.5	-2.01	3.31	27.61	22.29	169.434	Vertical	Pass
		1747.5	-1.86	3.33	27.57	22.38	172.982	Vertical	Pass
20.0MHz Band QPSK	1/#Mid	1720	-2.05	3.17	27.66	22.44	175.388	Vertical	Pass
		1732.5	-1.85	3.32	27.61	22.44	175.388	Vertical	Pass
		1745	-1.77	3.36	27.56	22.43	174.985	Vertical	Pass

Radiated Power (EIRP) for Band 4									
Mode	RB/RB SIZE	Frequency	Result						Conclusion
			SG Level (dBm)	Cable Loss (dBm)	Factor (dB)	Max. EIRP Average (dBm)	Max. EIRP Average (mW)	Polarization Of Max. ERP	
1.4MHz Band 16 QAM	1/#Mid	1710.7	-2.92	3.12	27.58	21.54	142.561	Horizontal	Pass
		1732.5	-2.80	3.27	27.61	21.54	142.561	Horizontal	Pass
		1754.3	-2.78	3.29	27.63	21.56	143.219	Horizontal	Pass
3.0MHz Band 16 QAM	1/#Mid	1711.5	-2.89	3.13	27.61	21.59	144.212	Horizontal	Pass
		1732.5	-2.83	3.27	27.61	21.51	141.579	Horizontal	Pass
		1753.5	-2.80	3.30	27.62	21.52	141.906	Horizontal	Pass
5.0MHz Band 16 QAM	1/#Mid	1712.5	-3.01	3.13	27.63	21.49	140.929	Horizontal	Pass
		1732.5	-2.80	3.27	27.61	21.54	142.561	Horizontal	Pass
		1752.5	-2.82	3.30	27.60	21.48	140.605	Horizontal	Pass
10.0MHz Band 16 QAM	1/#Mid	1715	-3.01	3.15	27.64	21.48	140.605	Horizontal	Pass
		1732.5	-2.73	3.31	27.61	21.57	143.549	Horizontal	Pass
		1750	-2.70	3.33	27.59	21.56	143.219	Horizontal	Pass
15.0MHz Band 16 QAM	1/#Mid	1717.5	-2.95	3.15	27.65	21.55	142.889	Horizontal	Pass
		1732.5	-2.83	3.31	27.61	21.47	140.281	Horizontal	Pass
		1747.5	-2.66	3.33	27.57	21.58	143.880	Horizontal	Pass
20.0MHz Band 16 QAM	1/#Mid	1720	-2.96	3.17	27.66	21.53	142.233	Horizontal	Pass
		1732.5	-2.86	3.32	27.61	21.43	138.995	Horizontal	Pass
		1745	-2.69	3.36	27.56	21.51	141.579	Horizontal	Pass
1.4MHz Band 16 QAM	1/#Mid	1710.7	-2.98	3.12	27.58	21.48	140.605	Vertical	Pass
		1732.5	-2.85	3.27	27.61	21.49	140.929	Vertical	Pass
		1754.3	-2.74	3.29	27.63	21.60	144.544	Vertical	Pass
3.0MHz Band 16 QAM	1/#Mid	1711.5	-3.00	3.13	27.61	21.48	140.605	Vertical	Pass
		1732.5	-2.79	3.27	27.61	21.55	142.889	Vertical	Pass
		1753.5	-2.84	3.30	27.62	21.48	140.605	Vertical	Pass
5.0MHz	1/#Mid	1712.5	-2.96	3.13	27.63	21.54	142.561	Vertical	Pass

Band 16 QAM		1732.5	-2.76	3.27	27.61	21.58	143.880	Vertical	Pass
		1752.5	-2.85	3.30	27.60	21.45	139.637	Vertical	Pass
10.0MHz Band 16 QAM	1/#Mid	1715	-3.03	3.15	27.64	21.46	139.959	Vertical	Pass
		1732.5	-2.84	3.31	27.61	21.46	139.959	Vertical	Pass
		1750	-2.71	3.33	27.59	21.55	142.889	Vertical	Pass
15.0MHz Band 16 QAM	1/#Mid	1717.5	-2.97	3.15	27.65	21.53	142.233	Vertical	Pass
		1732.5	-2.76	3.31	27.61	21.54	142.561	Vertical	Pass
		1747.5	-2.65	3.33	27.57	21.59	144.212	Vertical	Pass
20.0MHz Band 16 QAM	1/#Mid	1720	-2.85	3.17	27.66	21.64	145.881	Vertical	Pass
		1732.5	-2.69	3.32	27.61	21.60	144.544	Vertical	Pass
		1745	-2.57	3.36	27.56	21.63	145.546	Vertical	Pass

Note:
SG Level= Signal generator output
Max. EIRP Average (dBm)= Antenna Gain(dB)+ SG Level (dBm)- Cable Loss(dBm)
Factor Gain(dB)=Antenna Gain(dB) + Amplifier Factor (dB)

8.4 LTE BAND 5

Radiated Power (ERP) for Band 5										
Mode	RB/RB SIZE	Frequency	Result							Conclusion
			SG Level (dBm)	Cable Loss (dBm)	Factor (dB)	Correction (dB)	Max. ERP Average (dBm)	Max. ERP Average (mW)	Polarization Of Max. ERP	
1.4MHz Band QPSK	1/#Mid	824.7	6.86	2.01	19.68	2.15	22.38	172.982	Horizontal	Pass
		836.5	6.65	2.01	19.77	2.15	22.26	168.267	Horizontal	Pass
		848.3	6.67	2.02	19.82	2.15	22.32	170.608	Horizontal	Pass
3.0MHz Band QPSK	1/#Mid	825.5	6.74	2.01	19.70	2.15	22.28	169.044	Horizontal	Pass
		836.5	6.73	2.01	19.77	2.15	22.34	171.396	Horizontal	Pass
		847.5	6.73	2.02	19.81	2.15	22.37	172.584	Horizontal	Pass
5.0MHz Band QPSK	1/#Mid	826.5	6.70	2.01	19.71	2.15	22.25	167.880	Horizontal	Pass
		836.5	6.72	2.01	19.77	2.15	22.33	171.002	Horizontal	Pass
		846.5	6.71	2.02	19.79	2.15	22.33	171.002	Horizontal	Pass
10.0MHz Band QPSK	1/#Mid	829	6.77	2.01	19.73	2.15	22.34	171.396	Horizontal	Pass
		836.5	6.72	2.01	19.77	2.15	22.33	171.002	Horizontal	Pass
		844	6.71	2.02	19.78	2.15	22.32	170.608	Horizontal	Pass
1.4MHz Band QPSK	1/#Mid	824.7	6.82	2.01	19.68	2.15	22.34	171.396	Vertical	Pass
		836.5	6.76	2.01	19.77	2.15	22.37	172.584	Vertical	Pass
		848.3	6.66	2.02	19.82	2.15	22.31	170.216	Vertical	Pass
3.0MHz Band QPSK	1/#Mid	825.5	6.72	2.01	19.70	2.15	22.26	168.267	Vertical	Pass
		836.5	6.77	2.01	19.77	2.15	22.38	172.982	Vertical	Pass
		847.5	6.67	2.02	19.81	2.15	22.31	170.216	Vertical	Pass
5.0MHz Band QPSK	1/#Mid	826.5	6.81	2.01	19.71	2.15	22.36	172.187	Vertical	Pass
		836.5	6.71	2.01	19.77	2.15	22.32	170.608	Vertical	Pass
		846.5	6.63	2.02	19.79	2.15	22.25	167.880	Vertical	Pass
10.0MHz Band QPSK	1/#Mid	829	6.87	2.01	19.73	2.15	22.44	175.388	Vertical	Pass
		836.5	6.83	2.01	19.77	2.15	22.44	175.388	Vertical	Pass
		844	6.82	2.02	19.78	2.15	22.43	174.985	Vertical	Pass

Radiated Power (ERP) for Band 5										
Mode	RB/RB SIZE	Frequency	Result							Conclusion
			SG Level (dBm)	Cable Loss (dBm)	Factor (dB)	Correction (dB)	Max. ERP Average (dBm)	Max. ERP Average (mW)	Polarization Of Max. ERP	
1.4MHz Band 16 QAM	1/#Mid	824.7	6.14	2.01	19.68	2.15	21.66	146.555	Horizontal	Pass
		836.5	6.07	2.01	19.77	2.15	21.68	147.231	Horizontal	Pass
		848.3	5.99	2.02	19.82	2.15	21.64	145.881	Horizontal	Pass
3.0MHz Band 16 QAM	1/#Mid	825.5	6.14	2.01	19.70	2.15	21.68	147.231	Horizontal	Pass
		836.5	5.97	2.01	19.77	2.15	21.58	143.880	Horizontal	Pass
		847.5	5.98	2.02	19.81	2.15	21.62	145.211	Horizontal	Pass
5.0MHz Band 16 QAM	1/#Mid	826.5	6.01	2.01	19.71	2.15	21.56	143.219	Horizontal	Pass
		836.5	6.03	2.01	19.77	2.15	21.64	145.881	Horizontal	Pass
		846.5	5.92	2.02	19.79	2.15	21.54	142.561	Horizontal	Pass
10.0MHz Band 16 QAM	1/#Mid	829	6.07	2.01	19.73	2.15	21.64	145.881	Horizontal	Pass
		836.5	6.06	2.01	19.77	2.15	21.67	146.893	Horizontal	Pass
		844	6.04	2.02	19.78	2.15	21.65	146.218	Horizontal	Pass
1.4MHz Band 16 QAM	1/#Mid	824.7	6.10	2.01	19.68	2.15	21.62	145.211	Vertical	Pass
		836.5	5.96	2.01	19.77	2.15	21.57	143.549	Vertical	Pass
		848.3	6.01	2.02	19.82	2.15	21.66	146.555	Vertical	Pass
3.0MHz Band 16 QAM	1/#Mid	825.5	6.07	2.01	19.70	2.15	21.61	144.877	Vertical	Pass
		836.5	5.99	2.01	19.77	2.15	21.60	144.544	Vertical	Pass
		847.5	5.94	2.02	19.81	2.15	21.58	143.880	Vertical	Pass
5.0MHz Band 16 QAM	1/#Mid	826.5	6.08	2.01	19.71	2.15	21.63	145.546	Vertical	Pass
		836.5	5.95	2.01	19.77	2.15	21.56	143.219	Vertical	Pass
		846.5	5.91	2.02	19.79	2.15	21.53	142.233	Vertical	Pass
10.0MHz Band 16 QAM	1/#Mid	829	6.18	2.01	19.73	2.15	21.75	149.624	Vertical	Pass
		836.5	6.12	2.01	19.77	2.15	21.73	148.936	Vertical	Pass
		844	6.09	2.02	19.78	2.15	21.70	147.911	Vertical	Pass

Note:
SG Level= Signal generator output
Max. EIRP Average (dBm)= Antenna Gain(dB)+ SG Level (dBm)- Cable Loss(dBm)
Factor Gain(dB)=Antenna Gain(dB) + Amplifier Factor (dB)

8.5 LTE BAND 7

Radiated Power (EIRP) for Band 7									
Mode	RB/RB SIZE	Frequency	Result						Conclusion
			SG Level (dBm)	Cable Loss (dBm)	Antenna Factor (dB)	Max. EIRP Average (dBm)	Max. EIRP Average (mW)	Polarization Of Max. ERP	
5.0MHz Band QPSK	1/#Mid	2502.5	-0.53	4.54	27.75	22.68	185.353	Horizontal	Pass
		2535	-0.36	4.69	27.72	22.67	184.927	Horizontal	Pass
		2567.5	-0.21	4.71	27.71	22.79	190.108	Horizontal	Pass
10.0MHz Band QPSK	1/#Mid	2505	-0.44	4.55	27.76	22.77	189.234	Horizontal	Pass
		2535	-0.29	4.69	27.72	22.74	187.932	Horizontal	Pass
		2565	-0.31	4.72	27.70	22.67	184.927	Horizontal	Pass
15.0MHz Band QPSK	1/#Mid	2507.5	-0.57	4.55	27.77	22.65	184.077	Horizontal	Pass
		2535	-0.34	4.69	27.72	22.69	185.780	Horizontal	Pass
		2562.5	-0.32	4.72	27.69	22.65	184.077	Horizontal	Pass
20.0MHz Band QPSK	1/#Mid	2510	-0.45	4.57	27.78	22.76	188.799	Horizontal	Pass
		2535	-0.33	4.73	27.72	22.66	184.502	Horizontal	Pass
		2560	-0.18	4.75	27.68	22.75	188.365	Horizontal	Pass
5.0MHz Band QPSK	1/#Mid	2502.5	-0.48	4.54	27.75	22.73	187.499	Vertical	Pass
		2535	-0.36	4.69	27.72	22.67	184.927	Vertical	Pass
		2567.5	-0.22	4.71	27.71	22.78	189.671	Vertical	Pass
10.0MHz Band QPSK	1/#Mid	2505	-0.43	4.55	27.76	22.78	189.671	Vertical	Pass
		2535	-0.32	4.69	27.72	22.71	186.638	Vertical	Pass
		2565	-0.34	4.72	27.70	22.64	183.654	Vertical	Pass
15.0MHz Band QPSK	1/#Mid	2507.5	-0.55	4.55	27.77	22.67	184.927	Vertical	Pass
		2535	-0.30	4.69	27.72	22.73	187.499	Vertical	Pass
		2562.5	-0.24	4.72	27.69	22.73	187.499	Vertical	Pass
20.0MHz Band QPSK	1/#Mid	2510	-0.38	4.57	27.78	22.83	191.867	Vertical	Pass
		2535	-0.18	4.73	27.72	22.81	190.985	Vertical	Pass
		2560	-0.10	4.75	27.68	22.83	191.867	Vertical	Pass

Radiated Power (EIRP) for Band 7									
Mode	RB/RB SIZE	Frequency	Result						Conclusion
			SG Level (dBm)	Cable Loss (dBm)	Antenna Factor (dB)	Max. EIRP Average (dBm)	Max. EIRP Average (mW)	Polarization Of Max. ERP	
5.0MHz Band 16 QAM	1/#Mid	2502.5	-1.45	4.54	27.75	21.76	149.968	Horizontal	Pass
		2535	-1.28	4.69	27.72	21.75	149.624	Horizontal	Pass
		2567.5	-1.11	4.71	27.71	21.89	154.525	Horizontal	Pass
10.0MHz Band 16 QAM	1/#Mid	2505	-1.31	4.55	27.76	21.90	154.882	Horizontal	Pass
		2535	-1.23	4.69	27.72	21.80	151.356	Horizontal	Pass
		2565	-1.24	4.72	27.70	21.74	149.279	Horizontal	Pass
15.0MHz Band 16 QAM	1/#Mid	2507.5	-1.39	4.55	27.77	21.83	152.405	Horizontal	Pass
		2535	-1.28	4.69	27.72	21.75	149.624	Horizontal	Pass
		2562.5	-1.17	4.72	27.69	21.80	151.356	Horizontal	Pass
20.0MHz Band 16 QAM	1/#Mid	2510	-1.35	4.57	27.78	21.86	153.462	Horizontal	Pass
		2535	-1.09	4.73	27.72	21.90	154.882	Horizontal	Pass
		2560	-1.16	4.75	27.68	21.77	150.314	Horizontal	Pass
5.0MHz Band 16 QAM	1/#Mid	2502.5	-1.31	4.54	27.75	21.90	154.882	Vertical	Pass
		2535	-1.26	4.69	27.72	21.77	150.314	Vertical	Pass
		2567.5	-1.16	4.71	27.71	21.84	152.757	Vertical	Pass
10.0MHz Band 16 QAM	1/#Mid	2505	-1.36	4.55	27.76	21.85	153.109	Vertical	Pass
		2535	-1.22	4.69	27.72	21.81	151.705	Vertical	Pass
		2565	-1.18	4.72	27.70	21.80	151.356	Vertical	Pass
15.0MHz Band 16 QAM	1/#Mid	2507.5	-1.39	4.55	27.77	21.83	152.405	Vertical	Pass
		2535	-1.16	4.69	27.72	21.87	153.815	Vertical	Pass
		2562.5	-1.13	4.72	27.69	21.84	152.757	Vertical	Pass
20.0MHz Band 16 QAM	1/#Mid	2510	-1.29	4.57	27.78	21.92	155.597	Vertical	Pass
		2535	-1.05	4.73	27.72	21.94	156.315	Vertical	Pass
		2560	-1.01	4.75	27.68	21.92	155.597	Vertical	Pass

Note:
SG Level= Signal generator output
Max. EIRP Average (dBm)= Antenna Factor (dB)+ SG Level (dBm)- Cable Loss(dBm)

8.6 LTE BAND 12

Radiated Power (ERP) for Band 12										
Mode	RB/RB SIZE	Frequency	Result							Conclusion
			SG Level (dBm)	Cable Loss (dBm)	Antenna Gain (dB)	Correction (dB)	Max. EIRP Average (dBm)	Max. EIRP Average (mW)	Polarization Of Max. ERP	
1.4MHz Band QPSK	1/#Mid	699.7	8.15	1.91	19.21	2.15	23.30	213.796	Vertical	Pass
		707.5	8.09	1.91	19.26	2.15	23.29	213.304	Vertical	Pass
		715.3	8.10	1.93	19.34	2.15	23.36	216.770	Vertical	Pass
3.0MHz Band QPSK	1/#Mid	700.5	8.14	1.91	19.21	2.15	23.29	213.304	Vertical	Pass
		707.5	8.10	1.91	19.26	2.15	23.30	213.796	Vertical	Pass
		714.5	8.00	1.93	19.34	2.15	23.26	211.836	Vertical	Pass
5.0MHz Band QPSK	1/#Mid	701.5	8.07	1.91	19.23	2.15	23.24	210.863	Vertical	Pass
		707.5	8.04	1.91	19.26	2.15	23.24	210.863	Vertical	Pass
		713.5	8.08	1.92	19.33	2.15	23.34	215.774	Vertical	Pass
10.0Hz Band QPSK	1/#Mid	704	8.11	1.91	19.25	2.15	23.30	213.796	Vertical	Pass
		707.5	8.11	1.91	19.26	2.15	23.31	214.289	Vertical	Pass
		711	8.07	1.92	19.32	2.15	23.32	214.783	Vertical	Pass
1.4MHz Band QPSK	1/#Mid	699.7	8.24	1.91	19.21	2.15	23.39	218.273	Horizontal	Pass
		707.5	8.19	1.91	19.26	2.15	23.39	218.273	Horizontal	Pass
		715.3	8.08	1.93	19.34	2.15	23.34	215.774	Horizontal	Pass
3.0MHz Band QPSK	1/#Mid	700.5	8.20	1.91	19.21	2.15	23.35	216.272	Horizontal	Pass
		707.5	8.06	1.91	19.26	2.15	23.26	211.836	Horizontal	Pass
		714.5	8.03	1.93	19.34	2.15	23.29	213.304	Horizontal	Pass
5.0MHz Band QPSK	1/#Mid	701.5	8.05	1.91	19.23	2.15	23.22	209.894	Horizontal	Pass
		707.5	8.04	1.91	19.26	2.15	23.24	210.863	Horizontal	Pass
		713.5	8.07	1.92	19.33	2.15	23.33	215.278	Horizontal	Pass
10.0Hz Band QPSK	1/#Mid	704	8.21	1.91	19.25	2.15	23.40	218.776	Horizontal	Pass
		707.5	8.20	1.91	19.26	2.15	23.40	218.776	Horizontal	Pass
		711	8.16	1.92	19.32	2.15	23.41	219.280	Horizontal	Pass

Radiated Power (ERP) for Band 12										
Mode	RB/RB SIZE	Frequency	Result							Conclusion
			SG Level (dBm)	Cable Loss (dBm)	Antenna Gain (dB)	Correction (dB)	Max. EIRP Average (dBm)	Max. EIRP Average (mW)	Polarization Of Max. ERP	
1.4MHz Band 16 QAM	1/#Mid	699.7	6.48	1.91	19.21	2.15	21.63	145.546	Vertical	Pass
		707.5	6.48	1.91	19.26	2.15	21.68	147.231	Vertical	Pass
		715.3	6.30	1.93	19.34	2.15	21.56	143.219	Vertical	Pass
3.0MHz Band 16 QAM	1/#Mid	700.5	6.52	1.91	19.21	2.15	21.67	146.893	Vertical	Pass
		707.5	6.49	1.91	19.26	2.15	21.69	147.571	Vertical	Pass
		714.5	6.35	1.93	19.34	2.15	21.61	144.877	Vertical	Pass
5.0MHz Band 16 QAM	1/#Mid	701.5	6.44	1.91	19.23	2.15	21.61	144.877	Vertical	Pass
		707.5	6.45	1.91	19.26	2.15	21.65	146.218	Vertical	Pass
		713.5	6.42	1.92	19.33	2.15	21.68	147.231	Vertical	Pass
10.0MHz Band 16 QAM	1/#Mid	704	6.44	1.91	19.25	2.15	21.63	145.546	Vertical	Pass
		707.5	6.33	1.91	19.26	2.15	21.53	142.233	Vertical	Pass
		711	6.26	1.92	19.32	2.15	21.51	141.579	Vertical	Pass
1.4MHz Band 16 QAM	1/#Mid	699.7	6.51	1.91	19.21	2.15	21.66	146.555	Horizontal	Pass
		707.5	6.35	1.91	19.26	2.15	21.55	142.889	Horizontal	Pass
		715.3	6.30	1.93	19.34	2.15	21.56	143.219	Horizontal	Pass
3.0MHz Band 16 QAM	1/#Mid	700.5	6.52	1.91	19.21	2.15	21.67	146.893	Horizontal	Pass
		707.5	6.38	1.91	19.26	2.15	21.58	143.880	Horizontal	Pass
		714.5	6.35	1.93	19.34	2.15	21.61	144.877	Horizontal	Pass
5.0MHz Band 16 QAM	1/#Mid	701.5	6.53	1.91	19.23	2.15	21.70	147.911	Horizontal	Pass
		707.5	6.45	1.91	19.26	2.15	21.65	146.218	Horizontal	Pass
		713.5	6.42	1.92	19.33	2.15	21.68	147.231	Horizontal	Pass
10.0MHz Band 16 QAM	1/#Mid	704	6.56	1.91	19.25	2.15	21.75	149.624	Horizontal	Pass
		707.5	6.55	1.91	19.26	2.15	21.75	149.624	Horizontal	Pass
		711	6.48	1.92	19.32	2.15	21.73	148.936	Horizontal	Pass

Note:
SG Level= Signal generator output
Max. EIRP Average (dBm)= Antenna Gain(dB)+ SG Level (dBm)- Cable Loss(dBm)
Factor Gain(dB)=Antenna Gain(dB) + Amplifier Factor (dB)

8.7 LTE BAND 13

Radiated Power (ERP) for Band 13										
Mode	RB/RB SIZE	Frequency	Result							Conclusion
			SG Level (dBm)	Cable Loss (dBm)	Factor (dB)	Correction (dB)	Max. EPR Average (dBm)	Max. EPR Average (mW)	Polarization Of Max. ERP	
5.0MHz Band QPSK	1/#Mid	779.5	7.13	1.95	19.23	2.15	22.26	168.267	Vertical	Pass
		782	7.23	1.95	19.26	2.15	22.39	173.380	Vertical	Pass
		784.5	7.05	1.96	19.33	2.15	22.27	168.655	Vertical	Pass
10.0MHz Band QPSK	1/#Mid	782	7.23	1.95	19.25	2.15	22.38	172.982	Vertical	Pass
5.0MHz Band QPSK	1/#Mid	779.5	7.24	1.95	19.23	2.15	22.37	172.584	Horizontal	Pass
		782	7.16	1.95	19.26	2.15	22.32	170.608	Horizontal	Pass
		784.5	7.07	1.96	19.33	2.15	22.29	169.434	Horizontal	Pass
10.0MHz Band QPSK	1/#Mid	782	7.3	1.95	19.25	2.15	22.45	175.792	Horizontal	Pass

Radiated Power (ERP) for Band 13										
Mode	RB/RB SIZE	Frequency	Result							Conclusion
			SG Level (dBm)	Cable Loss (dBm)	Factor (dB)	Correction (dB)	Max. EPR Average (dBm)	Max. EPR Average (mW)	Polarization Of Max. ERP	
5.0MHz Band 16 QAM	1/#Mid	779.5	6.27	1.95	19.23	2.15	21.40	138.038	Vertical	Pass
		782	6.29	1.95	19.26	2.15	21.45	139.637	Vertical	Pass
		784.5	6.24	1.96	19.33	2.15	21.46	139.959	Vertical	Pass
10.0MHz Band 16 QAM	1/#Mid	782	6.18	1.95	19.25	2.15	21.33	135.831	Vertical	Pass
5.0MHz Band 16 QAM	1/#Mid	779.5	6.35	1.95	19.23	2.15	21.48	140.605	Horizontal	Pass
		782	6.25	1.95	19.26	2.15	21.41	138.357	Horizontal	Pass
		784.5	6.26	1.96	19.33	2.15	21.48	140.605	Horizontal	Pass
10.0MHz Band 16 QAM	1/#Mid	782	6.37	1.95	19.25	2.15	21.52	141.906	Horizontal	Pass

Note:
SG Level= Signal generator output
Max. EIRP Average (dBm)= Antenna Gain(dB)+ SG Level (dBm)- Cable Loss(dBm)
Factor Gain(dB)=Antenna Gain(dB) + Amplifier Factor (dB)

8.7 LTE BAND 14

Radiated Power (ERP) for Band 14										
Mode	RB/RB SIZE	Frequency	Result							Conclusion
			SG Level (dBm)	Cable Loss (dBm)	Factor (dB)	Correction (dB)	Max. EPR Average (dBm)	Max. EPR Average (mW)	Polarization Of Max. ERP	
5.0MHz Band QPSK	1/#Mid	790.5	7.04	1.91	19.23	2.15	22.21	166.341	Vertical	Pass
		793	7.06	1.91	19.26	2.15	22.26	168.267	Vertical	Pass
		795.5	6.91	1.92	19.33	2.15	22.17	164.816	Vertical	Pass
10.0MHz Band QPSK	1/#Mid	793	7.07	1.91	19.25	2.15	22.26	168.267	Vertical	Pass
5.0MHz Band QPSK	1/#Mid	790.5	7.06	1.91	19.23	2.15	22.23	167.109	Horizontal	Pass
		793	7.03	1.91	19.26	2.15	22.23	167.109	Horizontal	Pass
		795.5	6.98	1.92	19.33	2.15	22.24	167.494	Horizontal	Pass
10.0MHz Band QPSK	1/#Mid	793	7.15	1.91	19.25	2.15	22.34	171.396	Horizontal	Pass

Radiated Power (ERP) for Band 14										
Mode	RB/RB SIZE	Frequency	Result							Conclusion
			SG Level (dBm)	Cable Loss (dBm)	Factor (dB)	Correction (dB)	Max. EPR Average (dBm)	Max. EPR Average (mW)	Polarization Of Max. ERP	
5.0MHz Band 16 QAM	1/#Mid	790.5	6.21	1.91	19.23	2.15	21.38	137.404	Vertical	Pass
		793	6.16	1.91	19.26	2.15	21.36	136.773	Vertical	Pass
		795.5	6.21	1.92	19.33	2.15	21.47	140.281	Vertical	Pass
10.0MHz Band 16 QAM	1/#Mid	793	6.31	1.91	19.25	2.15	21.5	141.254	Vertical	Pass
5.0MHz Band 16 QAM	1/#Mid	790.5	6.22	1.91	19.23	2.15	21.39	137.721	Horizontal	Pass
		793	6.25	1.91	19.26	2.15	21.45	139.637	Horizontal	Pass
		795.5	6.11	1.92	19.33	2.15	21.37	137.088	Horizontal	Pass
10.0MHz Band 16 QAM	1/#Mid	793	6.34	1.91	19.25	2.15	21.53	142.233	Horizontal	Pass

Note:
SG Level= Signal generator output
Max. EIRP Average (dBm)= Antenna Gain(dB)+ SG Level (dBm)- Cable Loss(dBm)
Factor Gain(dB)=Antenna Gain(dB) + Amplifier Factor (dB)

8.8 LTE BAND 17

Radiated Power (ERP) for Band 17										
Mode	RB/RB SIZE	Frequency	Result							Conclusion
			SG Level (dBm)	Cable Loss (dBm)	Antenna Factor (dB)	Correction (dB)	Max. EIRP Average (dBm)	Max. EIRP Average (mW)	Polarization Of Max. ERP	
5.0MHz Band QPSK	1/#Mid	706.5	7.02	1.91	19.23	2.15	22.19	165.577	Vertical	Pass
		710	7.09	1.91	19.26	2.15	22.29	169.434	Vertical	Pass
		713.5	6.92	1.92	19.33	2.15	22.18	165.196	Vertical	Pass
10.0MHz Band QPSK	1/#Mid	709	6.98	1.91	19.25	2.15	22.17	164.816	Vertical	Pass
		710	7.05	1.91	19.26	2.15	22.25	167.880	Vertical	Pass
		711	6.98	1.92	19.32	2.15	22.23	167.109	Vertical	Pass
5.0MHz Band QPSK	1/#Mid	706.5	7.06	1.91	19.23	2.15	22.23	167.109	Horizontal	Pass
		710	7.09	1.91	19.26	2.15	22.29	169.434	Horizontal	Pass
		713.5	6.93	1.92	19.33	2.15	22.19	165.577	Horizontal	Pass
10.0MHz Band QPSK	1/#Mid	709	7.12	1.91	19.25	2.15	22.31	170.216	Horizontal	Pass
		710	7.14	1.91	19.26	2.15	22.34	171.396	Horizontal	Pass
		711	7.07	1.92	19.32	2.15	22.32	170.608	Horizontal	Pass

Radiated Power (ERP) for Band 17										
Mode	RB/RB SIZE	Frequency	Result							Conclusion
			SG Level (dBm)	Cable Loss (dBm)	Antenna Factor (dB)	Correction (dB)	Max. EIRP Average (dBm)	Max. EIRP Average (mW)	Polarization Of Max. ERP	
5.0MHz Band 16 QAM	1/#Mid	706.5	6.35	1.91	19.23	2.15	21.52	141.906	Vertical	Pass
		710	6.33	1.91	19.26	2.15	21.53	142.233	Vertical	Pass
		713.5	6.28	1.92	19.33	2.15	21.54	142.561	Vertical	Pass
10.0MHz Band 16 QAM	1/#Mid	709	6.39	1.91	19.25	2.15	21.58	143.880	Vertical	Pass
		710	6.38	1.91	19.26	2.15	21.58	143.880	Vertical	Pass
		711	6.33	1.92	19.32	2.15	21.58	143.880	Vertical	Pass
5.0MHz Band 16 QAM	1/#Mid	706.5	6.37	1.91	19.23	2.15	21.54	142.561	Horizontal	Pass
		710	6.27	1.91	19.26	2.15	21.47	140.281	Horizontal	Pass
		713.5	6.22	1.92	19.33	2.15	21.48	140.605	Horizontal	Pass
10.0MHz Band 16 QAM	1/#Mid	709	6.44	1.91	19.25	2.15	21.63	145.546	Horizontal	Pass
		710	6.43	1.91	19.26	2.15	21.63	145.546	Horizontal	Pass
		711	6.39	1.92	19.32	2.15	21.64	145.881	Horizontal	Pass

Note:
ERP=EIRP-2.15
SG Level= Signal generator output
Max. EIRP Average (dBm)= Antenna Factor (dB)+ SG Level (dBm)- Cable Loss(dBm)

8.9 LTE BAND 25

Radiated Power (EIRP) for Band 25									
Mode	RB/RB SIZE	Frequency	Result						Conclusion
			SG Level (dBm)	Cable Loss (dBm)	Factor (dB)	Max. EIRP Average (dBm)	Max. EIRP Average (mW)	Polarization Of Max. ERP	
1.4MHz Band QPSK	1/#Mid	1850.7	-1.86	3.12	27.58	22.60	181.970	Horizontal	Pass
		1882.5	-1.65	3.27	27.61	22.69	185.780	Horizontal	Pass
		1914.3	-1.75	3.29	27.63	22.59	181.552	Horizontal	Pass
3.0MHz Band QPSK	1/#Mid	1851.5	-1.79	3.13	27.61	22.69	185.780	Horizontal	Pass
		1882.5	-1.68	3.27	27.61	22.66	184.502	Horizontal	Pass
		1753.5	-1.74	3.30	27.62	22.58	181.134	Horizontal	Pass
5.0MHz Band QPSK	1/#Mid	1852.5	-1.87	3.13	27.63	22.63	183.231	Horizontal	Pass
		1882.5	-1.72	3.27	27.61	22.62	182.810	Horizontal	Pass
		1912.5	-1.62	3.30	27.60	22.68	185.353	Horizontal	Pass
10.0MHz Band QPSK	1/#Mid	1855	-1.88	3.15	27.64	22.61	182.390	Horizontal	Pass
		1882.5	-1.62	3.31	27.61	22.68	185.353	Horizontal	Pass
		1910	-1.66	3.33	27.59	22.60	181.970	Horizontal	Pass
15.0MHz Band QPSK	1/#Mid	1857.5	-1.92	3.15	27.65	22.58	181.134	Horizontal	Pass
		1882.5	-1.68	3.31	27.61	22.62	182.810	Horizontal	Pass
		1907.5	-1.60	3.33	27.57	22.64	183.654	Horizontal	Pass
20.0MHz Band QPSK	1/#Mid	1860	-1.97	3.17	27.66	22.52	178.649	Horizontal	Pass
		1882.5	-1.69	3.32	27.61	22.60	181.970	Horizontal	Pass
		1905	-1.56	3.36	27.56	22.64	183.654	Horizontal	Pass
1.4MHz Band QPSK	1/#Mid	1850.7	-1.91	3.12	27.58	22.55	179.887	Vertical	Pass
		1882.5	-1.77	3.27	27.61	22.57	180.717	Vertical	Pass
		1914.3	-1.72	3.29	27.63	22.62	182.810	Vertical	Pass
3.0MHz Band QPSK	1/#Mid	1851.5	-1.89	3.13	27.61	22.59	181.552	Vertical	Pass
		1882.5	-1.77	3.27	27.61	22.57	180.717	Vertical	Pass
		1753.5	-1.75	3.30	27.62	22.57	180.717	Vertical	Pass
5.0MHz Band QPSK	1/#Mid	1852.5	-1.88	3.13	27.63	22.62	182.810	Vertical	Pass
		1882.5	-1.82	3.27	27.61	22.52	178.649	Vertical	Pass
		1912.5	-1.63	3.30	27.60	22.67	184.927	Vertical	Pass
10.0MHz Band	1/#Mid	1855	-1.80	3.15	27.64	22.69	185.780	Vertical	Pass
		1882.5	-1.71	3.31	27.61	22.59	181.552	Vertical	Pass

QPSK		1910	-1.58	3.33	27.59	22.68	185.353	Vertical	Pass
15.0MHz Band QPSK	1/#Mid	1857.5	-1.82	3.15	27.65	22.68	185.353	Vertical	Pass
		1882.5	-1.73	3.31	27.61	22.57	180.717	Vertical	Pass
		1907.5	-1.59	3.33	27.57	22.65	184.077	Vertical	Pass
20.0MHz Band QPSK	1/#Mid	1860	-1.78	3.17	27.66	22.71	186.638	Vertical	Pass
		1882.5	-1.56	3.32	27.61	22.73	187.499	Vertical	Pass
		1905	-1.47	3.36	27.56	22.73	187.499	Vertical	Pass

Radiated Power (EIRP) for Band 25									
Mode	RB/RB SIZE	Frequency	Result						Conclusion
			SG Level (dBm)	Cable Loss (dBm)	Factor (dB)	Max. EIRP Average (dBm)	Max. EIRP Average (mW)	Polarization Of Max. ERP	
1.4MHz Band 16 QAM	1/#Mid	1850.7	-2.96	3.12	27.58	21.50	141.254	Horizontal	Pass
		1882.5	-2.94	3.27	27.61	21.40	138.038	Horizontal	Pass
		1914.3	-2.91	3.29	27.63	21.43	138.995	Horizontal	Pass
3.0MHz Band 16 QAM	1/#Mid	1851.5	-3.03	3.13	27.61	21.45	139.637	Horizontal	Pass
		1882.5	-2.92	3.27	27.61	21.42	138.676	Horizontal	Pass
		1753.5	-2.85	3.30	27.62	21.47	140.281	Horizontal	Pass
5.0MHz Band 16 QAM	1/#Mid	1852.5	-3.14	3.13	27.63	21.36	136.773	Horizontal	Pass
		1882.5	-2.88	3.27	27.61	21.46	139.959	Horizontal	Pass
		1912.5	-2.82	3.30	27.60	21.48	140.605	Horizontal	Pass
10.0MHz Band 16 QAM	1/#Mid	1855	-3.07	3.15	27.64	21.42	138.676	Horizontal	Pass
		1882.5	-2.87	3.31	27.61	21.43	138.995	Horizontal	Pass
		1910	-2.84	3.33	27.59	21.42	138.676	Horizontal	Pass
15.0MHz Band 16 QAM	1/#Mid	1857.5	-3.10	3.15	27.65	21.40	138.038	Horizontal	Pass
		1882.5	-2.80	3.31	27.61	21.50	141.254	Horizontal	Pass
		1907.5	-2.74	3.33	27.57	21.50	141.254	Horizontal	Pass
20.0MHz Band 16 QAM	1/#Mid	1860	-3.11	3.17	27.66	21.38	137.404	Horizontal	Pass
		1882.5	-2.87	3.32	27.61	21.42	138.676	Horizontal	Pass
		1905	-2.78	3.36	27.56	21.42	138.676	Horizontal	Pass
1.4MHz Band 16 QAM	1/#Mid	1850.7	-3.00	3.12	27.58	21.46	139.959	Vertical	Pass
		1882.5	-2.95	3.27	27.61	21.39	137.721	Vertical	Pass
		1914.3	-2.91	3.29	27.63	21.43	138.995	Vertical	Pass
3.0MHz Band 16 QAM	1/#Mid	1851.5	-3.12	3.13	27.61	21.36	136.773	Vertical	Pass
		1882.5	-2.91	3.27	27.61	21.43	138.995	Vertical	Pass
		1753.5	-2.82	3.30	27.62	21.50	141.254	Vertical	Pass

5.0MHz Band 16 QAM	1/#Mid	1852.5	-3.11	3.13	27.63	21.39	137.721	Vertical	Pass
		1882.5	-3.01	3.27	27.61	21.33	135.831	Vertical	Pass
		1912.5	-2.96	3.30	27.60	21.34	136.144	Vertical	Pass
10.0MHz Band 16 QAM	1/#Mid	1855	-3.06	3.15	27.64	21.43	138.995	Vertical	Pass
		1882.5	-2.88	3.31	27.61	21.42	138.676	Vertical	Pass
		1910	-2.82	3.33	27.59	21.44	139.316	Vertical	Pass
15.0MHz Band 16 QAM	1/#Mid	1857.5	-3.16	3.15	27.65	21.34	136.144	Vertical	Pass
		1882.5	-2.85	3.31	27.61	21.45	139.637	Vertical	Pass
		1907.5	-2.81	3.33	27.57	21.43	138.995	Vertical	Pass
20.0MHz Band 16 QAM	1/#Mid	1860	-2.97	3.17	27.66	21.52	141.906	Vertical	Pass
		1882.5	-2.78	3.32	27.61	21.51	141.579	Vertical	Pass
		1905	-2.67	3.36	27.56	21.53	142.233	Vertical	Pass

Note:
SG Level= Signal generator output
Max. EIRP Average (dBm)= Antenna Gain(dB)+ SG Level (dBm)- Cable Loss(dBm)
Factor Gain(dB)=Antenna Gain(dB) + Amplifier Factor (dB)

8.10 LTE BAND 26 A

Radiated Power (ERP) for Band 26a										
Mode	RB/RB SIZE	Frequency	Result							Conclusion
			SG Level (dBm)	Cable Loss (dBm)	Factor (dB)	Correction (dB)	Max. EPR Average (dBm)	Max. EPR Average (mW)	Polarization Of Max. ERP	
1.4MHz Band QPSK	1/#Mid	814.7	7.54	1.91	19.21	2.15	22.69	185.780	Vertical	Pass
		819	7.56	1.91	19.26	2.15	22.76	188.799	Vertical	Pass
		823.3	7.52	1.93	19.34	2.15	22.78	189.671	Vertical	Pass
3.0MHz Band QPSK	1/#Mid	815.5	7.62	1.91	19.21	2.15	22.77	189.234	Vertical	Pass
		819	7.47	1.91	19.26	2.15	22.67	184.927	Vertical	Pass
		822.5	7.41	1.93	19.34	2.15	22.67	184.927	Vertical	Pass
5.0MHz Band QPSK	1/#Mid	816.5	7.51	1.91	19.23	2.15	22.68	185.353	Vertical	Pass
		819	7.60	1.91	19.26	2.15	22.80	190.546	Vertical	Pass
		821.5	7.38	1.92	19.33	2.15	22.64	183.654	Vertical	Pass
10.0MHz Band QPSK	1/#Mid	819	7.54	1.93	19.25	2.15	22.71	186.638	Vertical	Pass
1.4MHz Band QPSK	1/#Mid	814.7	7.58	1.91	19.21	2.15	22.73	187.499	Horizontal	Pass
		819	7.50	1.91	19.26	2.15	22.70	186.209	Horizontal	Pass
		823.3	7.41	1.93	19.34	2.15	22.67	184.927	Horizontal	Pass
3.0MHz Band QPSK	1/#Mid	815.5	7.61	1.91	19.21	2.15	22.76	188.799	Horizontal	Pass
		819	7.50	1.91	19.26	2.15	22.70	186.209	Horizontal	Pass
		822.5	7.42	1.93	19.34	2.15	22.68	185.353	Horizontal	Pass
5.0MHz Band QPSK	1/#Mid	816.5	7.46	1.91	19.23	2.15	22.63	183.231	Horizontal	Pass
		819	7.47	1.91	19.26	2.15	22.67	184.927	Horizontal	Pass
		821.5	7.37	1.92	19.33	2.15	22.63	183.231	Horizontal	Pass
10.0MHz Band QPSK	1/#Mid	819	7.67	1.93	19.25	2.15	22.84	192.309	Horizontal	Pass

Radiated Power (ERP) for Band 26a										
Mode	RB/RB SIZE	Frequency	Result							Conclusion
			SG Level (dBm)	Cable Loss (dBm)	Factor (dB)	Correction (dB)	Max. EPR Average (dBm)	Max. EPR Average (mW)	Polarization Of Max. ERP	
1.4MHz Band 16 QAM	1/#Mid	814.7	6.62	1.91	19.21	2.15	21.77	150.314	Vertical	Pass
		819	6.65	1.91	19.26	2.15	21.85	153.109	Vertical	Pass
		823.3	6.57	1.93	19.34	2.15	21.83	152.405	Vertical	Pass
3.0MHz Band 16 QAM	1/#Mid	815.5	6.65	1.91	19.21	2.15	21.80	151.356	Vertical	Pass
		819	6.70	1.91	19.26	2.15	21.90	154.882	Vertical	Pass
		822.5	6.55	1.93	19.34	2.15	21.81	151.705	Vertical	Pass
5.0MHz Band 16 QAM	1/#Mid	816.5	6.72	1.91	19.23	2.15	21.89	154.525	Vertical	Pass
		819	6.64	1.91	19.26	2.15	21.84	152.757	Vertical	Pass
		821.5	6.48	1.92	19.33	2.15	21.74	149.279	Vertical	Pass
10.0MHz Band 16 QAM	1/#Mid	819	6.69	1.93	19.25	2.15	21.86	153.462	Vertical	Pass
1.4MHz Band 16 QAM	1/#Mid	814.7	6.69	1.91	19.21	2.15	21.84	152.757	Horizontal	Pass
		819	6.62	1.91	19.26	2.15	21.82	152.055	Horizontal	Pass
		823.3	6.50	1.93	19.34	2.15	21.76	149.968	Horizontal	Pass
3.0MHz Band 16 QAM	1/#Mid	815.5	6.65	1.91	19.21	2.15	21.80	151.356	Horizontal	Pass
		819	6.68	1.91	19.26	2.15	21.88	154.170	Horizontal	Pass
		822.5	6.59	1.93	19.34	2.15	21.85	153.109	Horizontal	Pass
5.0MHz Band 16 QAM	1/#Mid	816.5	6.63	1.91	19.23	2.15	21.80	151.356	Horizontal	Pass
		819	6.68	1.91	19.26	2.15	21.88	154.170	Horizontal	Pass
		821.5	6.48	1.92	19.33	2.15	21.74	149.279	Horizontal	Pass
10.0MHz Band 16 QAM	1/#Mid	819	6.74	1.93	19.25	2.15	21.91	155.239	Horizontal	Pass

Note:
SG Level= Signal generator output
Max. EIRP Average (dBm)= Antenna Gain(dB)+ SG Level (dBm)- Cable Loss(dBm)
Factor Gain(dB)=Antenna Gain(dB) + Amplifier Factor (dB)

8.11 LTE BAND 26B

Radiated Power (ERP) for Band 26B										
Mode	RB/RB SIZE	Frequency	Result							Conclusion
			SG Level (dBm)	Cable Loss (dBm)	Factor (dB)	Correction (dB)	Max. ERP Average (dBm)	Max. ERP Average (mW)	Polarization Of Max. ERP	
1.4MHz Band QPSK	1/#Mid	824.7	6.64	2.02	19.72	2.15	22.19	165.577	Horizontal	Pass
		836.5	6.45	2.02	19.83	2.15	22.11	162.555	Horizontal	Pass
		848.3	6.30	2.03	19.95	2.15	22.07	161.065	Horizontal	Pass
3.0MHz Band QPSK	1/#Mid	825.5	6.47	2.02	19.84	2.15	22.14	163.682	Horizontal	Pass
		836.5	6.29	2.02	19.94	2.15	22.06	160.694	Horizontal	Pass
		847.5	6.35	2.03	19.98	2.15	22.15	164.059	Horizontal	Pass
5.0MHz Band QPSK	1/#Mid	826.5	6.47	2.02	19.75	2.15	22.05	160.325	Horizontal	Pass
		836.5	6.46	2.02	19.83	2.15	22.12	162.930	Horizontal	Pass
		846.5	6.32	2.03	19.92	2.15	22.06	160.694	Horizontal	Pass
10.0MHz Band QPSK	1/#Mid	829	6.43	2.02	19.84	2.15	22.10	162.181	Horizontal	Pass
		836.5	6.46	2.02	19.90	2.15	22.19	165.577	Horizontal	Pass
		844	6.33	2.03	19.96	2.15	22.11	162.555	Horizontal	Pass
15.0MHz Band QPSK	1/#Mid	831.5	6.87	2.02	19.33	2.15	22.03	159.588	Vertical	Pass
		836.5	7.00	2.02	19.37	2.15	22.20	165.959	Vertical	Pass
		841.5	6.68	2.03	19.52	2.15	22.02	159.221	Vertical	Pass
1.4MHz Band QPSK	1/#Mid	824.7	6.50	2.02	19.76	2.15	22.09	161.808	Vertical	Pass
		836.5	6.47	2.02	19.78	2.15	22.08	161.436	Vertical	Pass
		848.3	6.30	2.03	19.94	2.15	22.06	160.694	Vertical	Pass
3.0MHz Band QPSK	1/#Mid	825.5	6.50	2.02	19.83	2.15	22.16	164.437	Vertical	Pass
		836.5	6.35	2.02	19.96	2.15	22.14	163.682	Vertical	Pass
		847.5	6.47	2.03	19.87	2.15	22.16	164.437	Vertical	Pass
5.0MHz Band QPSK	1/#Mid	826.5	6.48	2.02	19.86	2.15	22.17	164.816	Vertical	Pass
		836.5	6.47	2.02	19.81	2.15	22.11	162.555	Vertical	Pass
		846.5	6.52	2.03	19.83	2.15	22.17	164.816	Vertical	Pass
10.0MHz Band QPSK	1/#Mid	829	6.64	2.02	19.75	2.15	22.22	166.725	Vertical	Pass
		836.5	6.55	2.02	19.85	2.15	22.23	167.109	Vertical	Pass
		844	6.61	2.03	19.80	2.15	22.23	167.109	Vertical	Pass
15.0MHz Band QPSK	1/#Mid	831.5	7.10	2.02	19.31	2.15	22.24	167.494	Horizontal	Pass
		836.5	7.07	2.02	19.33	2.15	22.23	167.109	Horizontal	Pass
		841.5	7.01	2.03	19.38	2.15	22.21	166.341	Horizontal	Pass

Radiated Power (ERP) for Band 26B										
Mode	RB/RB SIZE	Frequency	Result							Conclusion
			SG Level (dBm)	Cable Loss (dBm)	Factor (dB)	Correction (dB)	Max. EPR Average (dBm)	Max. EPR Average (mW)	Polarization Of Max. ERP	
1.4MHz Band 16 QAM	1/#Mid	824.7	5.93	2.02	19.72	2.15	21.48	140.605	Horizontal	Pass
		836.5	5.73	2.02	19.83	2.15	21.39	137.721	Horizontal	Pass
		848.3	5.60	2.03	19.95	2.15	21.37	137.088	Horizontal	Pass
3.0MHz Band 16 QAM	1/#Mid	825.5	5.81	2.02	19.84	2.15	21.48	140.605	Horizontal	Pass
		836.5	5.67	2.02	19.94	2.15	21.44	139.316	Horizontal	Pass
		847.5	5.57	2.03	19.98	2.15	21.37	137.088	Horizontal	Pass
5.0MHz Band 16 QAM	1/#Mid	826.5	5.78	2.02	19.75	2.15	21.36	136.773	Horizontal	Pass
		836.5	5.69	2.02	19.83	2.15	21.35	136.458	Horizontal	Pass
		846.5	5.61	2.03	19.92	2.15	21.35	136.458	Horizontal	Pass
10.0MHz Band 16 QAM	1/#Mid	829	5.68	2.02	19.84	2.15	21.35	136.458	Horizontal	Pass
		836.5	5.64	2.02	19.90	2.15	21.37	137.088	Horizontal	Pass
		844	5.52	2.03	19.96	2.15	21.30	134.896	Horizontal	Pass
15.0MHz Band 16 QAM	1/#Mid	831.5	6.20	2.02	19.33	2.15	21.36	136.773	Vertical	Pass
		836.5	6.12	2.02	19.37	2.15	21.32	135.519	Vertical	Pass
		841.5	6.04	2.03	19.52	2.15	21.38	137.404	Vertical	Pass
1.4MHz Band 16 QAM	1/#Mid	824.7	5.79	2.02	19.76	2.15	21.38	137.404	Vertical	Pass
		836.5	5.82	2.02	19.78	2.15	21.43	138.995	Vertical	Pass
		848.3	5.65	2.03	19.94	2.15	21.41	138.357	Vertical	Pass
3.0MHz Band 16 QAM	1/#Mid	825.5	5.80	2.02	19.83	2.15	21.46	139.959	Vertical	Pass
		836.5	5.58	2.02	19.96	2.15	21.37	137.088	Vertical	Pass
		847.5	5.72	2.03	19.87	2.15	21.41	138.357	Vertical	Pass
5.0MHz Band 16 QAM	1/#Mid	826.5	5.68	2.02	19.86	2.15	21.37	137.088	Vertical	Pass
		836.5	5.82	2.02	19.81	2.15	21.46	139.959	Vertical	Pass
		846.5	5.68	2.03	19.83	2.15	21.33	135.831	Vertical	Pass
10.0MHz Band 16 QAM	1/#Mid	829	5.97	2.02	19.75	2.15	21.55	142.889	Vertical	Pass
		836.5	5.85	2.02	19.85	2.15	21.53	142.233	Vertical	Pass
		844	5.89	2.03	19.80	2.15	21.51	141.579	Vertical	Pass
15.0MHz Band 16 QAM	1/#Mid	831.5	6.39	2.02	19.31	2.15	21.53	142.233	Horizontal	Pass
		836.5	6.41	2.02	19.33	2.15	21.57	143.549	Horizontal	Pass
		841.5	6.33	2.03	19.38	2.15	21.53	142.233	Horizontal	Pass

Note:
SG Level= Signal generator output
Max. EIRP Average (dBm)= Antenna Gain(dB)+ SG Level (dBm)- Cable Loss(dBm)
Factor Gain(dB)=Antenna Gain(dB) + Amplifier Factor (dB)

8.12 LTE BAND 38

Radiated Power (EIRP) for Band 38									
Mode	RB/RB SIZE	Frequency	Result						Conclusion
			SG Level (dBm)	Cable Loss (dBm)	Antenna Factor (dB)	Max. EIRP Average (dBm)	Max. EIRP Average (mW)	Polarization Of Max. ERP	
5.0MHz Band QPSK	1/#Mid	2572.5	-1.62	4.44	27.75	21.69	147.571	Horizontal	Pass
		2595	-1.50	4.67	27.72	21.55	142.889	Horizontal	Pass
		2617.5	-1.50	4.62	27.71	21.59	144.212	Horizontal	Pass
10.0MHz Band QPSK	1/#Mid	2575	-1.60	4.51	27.76	21.65	146.218	Horizontal	Pass
		2595	-1.49	4.60	27.72	21.63	145.546	Horizontal	Pass
		2615	-1.45	4.70	27.70	21.55	142.889	Horizontal	Pass
15.0MHz Band QPSK	1/#Mid	2577.5	-1.61	4.47	27.77	21.69	147.571	Horizontal	Pass
		2595	-1.53	4.65	27.72	21.54	142.561	Horizontal	Pass
		2612.5	-1.43	4.66	27.69	21.60	144.544	Horizontal	Pass
20.0MHz Band QPSK	1/#Mid	2580	-1.59	4.50	27.78	21.69	147.571	Horizontal	Pass
		2595	-1.50	4.66	27.72	21.56	143.219	Horizontal	Pass
		2610	-1.44	4.68	27.68	21.56	143.219	Horizontal	Pass
5.0MHz Band QPSK	1/#Mid	2572.5	-1.63	4.48	27.75	21.64	145.881	Vertical	Pass
		2595	-1.44	4.62	27.72	21.66	146.555	Vertical	Pass
		2617.5	-1.40	4.63	27.71	21.68	147.231	Vertical	Pass
10.0MHz Band QPSK	1/#Mid	2575	-1.75	4.46	27.76	21.55	142.889	Vertical	Pass
		2595	-1.52	4.65	27.72	21.55	142.889	Vertical	Pass
		2615	-1.40	4.69	27.70	21.61	144.877	Vertical	Pass
15.0MHz Band QPSK	1/#Mid	2577.5	-1.71	4.47	27.77	21.59	144.212	Vertical	Pass
		2595	-1.48	4.65	27.72	21.59	144.212	Vertical	Pass
		2612.5	-1.48	4.66	27.69	21.55	142.889	Vertical	Pass
20.0MHz Band QPSK	1/#Mid	2580	-1.51	4.53	27.78	21.74	149.279	Vertical	Pass
		2595	-1.34	4.66	27.72	21.72	148.594	Vertical	Pass
		2610	-1.30	4.68	27.68	21.70	147.911	Vertical	Pass

Radiated Power (EIRP) for Band 38									
Mode	RB/RB SIZE	Frequency	Result						Conclusion
			SG Level (dBm)	Cable Loss (dBm)	Antenna Factor (dB)	Max. EIRP Average (dBm)	Max. EIRP Average (mW)	Polarization Of Max. ERP	
5.0MHz Band 16 QAM	1/#Mid	2572.5	-2.52	4.44	27.75	20.79	119.950	Horizontal	Pass
		2595	-2.33	4.67	27.72	20.72	118.032	Horizontal	Pass
		2617.5	-2.40	4.62	27.71	20.69	117.220	Horizontal	Pass
10.0MHz Band 16 QAM	1/#Mid	2575	-2.55	4.51	27.76	20.70	117.490	Horizontal	Pass
		2595	-2.47	4.60	27.72	20.65	116.145	Horizontal	Pass
		2615	-2.33	4.70	27.70	20.67	116.681	Horizontal	Pass
15.0MHz Band 16 QAM	1/#Mid	2577.5	-2.51	4.47	27.77	20.79	119.950	Horizontal	Pass
		2595	-2.42	4.65	27.72	20.65	116.145	Horizontal	Pass
		2612.5	-2.36	4.66	27.69	20.67	116.681	Horizontal	Pass
20.0MHz Band 16 QAM	1/#Mid	2580	-2.55	4.50	27.78	20.73	118.304	Horizontal	Pass
		2595	-2.37	4.66	27.72	20.69	117.220	Horizontal	Pass
		2610	-2.25	4.68	27.68	20.75	118.850	Horizontal	Pass
5.0MHz Band 16 QAM	1/#Mid	2572.5	-2.62	4.48	27.75	20.65	116.145	Vertical	Pass
		2595	-2.43	4.62	27.72	20.67	116.681	Vertical	Pass
		2617.5	-2.40	4.63	27.71	20.68	116.950	Vertical	Pass
10.0MHz Band 16 QAM	1/#Mid	2575	-2.60	4.46	27.76	20.70	117.490	Vertical	Pass
		2595	-2.32	4.65	27.72	20.75	118.850	Vertical	Pass
		2615	-2.33	4.69	27.70	20.68	116.950	Vertical	Pass
15.0MHz Band 16 QAM	1/#Mid	2577.5	-2.61	4.47	27.77	20.69	117.220	Vertical	Pass
		2595	-2.37	4.65	27.72	20.70	117.490	Vertical	Pass
		2612.5	-2.36	4.66	27.69	20.67	116.681	Vertical	Pass
20.0MHz Band 16 QAM	1/#Mid	2580	-2.41	4.53	27.78	20.84	121.339	Vertical	Pass
		2595	-2.23	4.66	27.72	20.83	121.060	Vertical	Pass
		2610	-2.20	4.68	27.68	20.80	120.226	Vertical	Pass

Note:
SG Level= Signal generator output
Max. EIRP Average (dBm)= Antenna Factor (dB)+ SG Level (dBm)- Cable Loss(dBm)

8.13 LTE BAND 41

Radiated Power (EIRP) for Band 41									
Mode	RB/RB SIZE	Frequency	Result						Conclusion
			SG Level (dBm)	Cable Loss (dBm)	Factor (dB)	Max. EIRP Average (dBm)	Max. EIRP Average (mW)	Polarization Of Max. ERP	
5.0MHz Band QPSK	1/#Mid	2537.5	0.38	4.54	27.75	23.59	228.560	Horizontal	Pass
		2595	0.46	4.69	27.72	23.49	223.357	Horizontal	Pass
		2652.5	0.54	4.71	27.71	23.54	225.944	Horizontal	Pass
10.0MHz Band QPSK	1/#Mid	2540	0.32	4.55	27.76	23.53	225.424	Horizontal	Pass
		2595	0.52	4.69	27.72	23.55	226.464	Horizontal	Pass
		2650	0.56	4.72	27.70	23.54	225.944	Horizontal	Pass
15.0MHz Band QPSK	1/#Mid	2542.5	0.38	4.55	27.77	23.60	229.087	Horizontal	Pass
		2595	0.52	4.69	27.72	23.55	226.464	Horizontal	Pass
		2647.5	0.55	4.72	27.69	23.52	224.905	Horizontal	Pass
20.0MHz Band QPSK	1/#Mid	2545	0.29	4.57	27.78	23.50	223.872	Horizontal	Pass
		2595	0.49	4.73	27.72	23.48	222.844	Horizontal	Pass
		2645	0.67	4.75	27.68	23.60	229.087	Horizontal	Pass
5.0MHz Band QPSK	1/#Mid	2537.5	0.29	4.54	27.75	23.50	223.872	Vertical	Pass
		2595	0.44	4.69	27.72	23.47	222.331	Vertical	Pass
		2652.5	0.58	4.71	27.71	23.58	228.034	Vertical	Pass
10.0MHz Band QPSK	1/#Mid	2540	0.38	4.55	27.76	23.59	228.560	Vertical	Pass
		2595	0.47	4.69	27.72	23.50	223.872	Vertical	Pass
		2650	0.57	4.72	27.70	23.55	226.464	Vertical	Pass
15.0MHz Band QPSK	1/#Mid	2542.5	0.32	4.55	27.77	23.54	225.944	Vertical	Pass
		2595	0.40	4.69	27.72	23.43	220.293	Vertical	Pass
		2647.5	0.50	4.72	27.69	23.47	222.331	Vertical	Pass
20.0MHz Band QPSK	1/#Mid	2545	0.39	4.57	27.78	23.60	229.087	Vertical	Pass
		2595	0.62	4.73	27.72	23.61	229.615	Vertical	Pass
		2645	0.70	4.75	27.68	23.63	230.675	Vertical	Pass

Radiated Power (EIRP) for Band 41									
Mode	RB/RB SIZE	Frequency	Result						Conclusion
			SG Level (dBm)	Cable Loss (dBm)	Factor (dB)	Max. EIRP Average (dBm)	Max. EIRP Average (mW)	Polarization Of Max. ERP	
5.0MHz Band 16 QAM	1/#Mid	2537.5	-0.56	4.54	27.75	22.65	184.077	Horizontal	Pass
		2595	-0.34	4.69	27.72	22.69	185.780	Horizontal	Pass
		2652.5	-0.20	4.71	27.71	22.80	190.546	Horizontal	Pass
10.0MHz Band 16 QAM	1/#Mid	2540	-0.53	4.55	27.76	22.68	185.353	Horizontal	Pass
		2595	-0.29	4.69	27.72	22.74	187.932	Horizontal	Pass
		2650	-0.27	4.72	27.70	22.71	186.638	Horizontal	Pass
15.0MHz Band 16 QAM	1/#Mid	2542.5	-0.43	4.55	27.77	22.79	190.108	Horizontal	Pass
		2595	-0.25	4.69	27.72	22.78	189.671	Horizontal	Pass
		2647.5	-0.24	4.72	27.69	22.73	187.499	Horizontal	Pass
20.0MHz Band 16 QAM	1/#Mid	2545	-0.45	4.57	27.78	22.76	188.799	Horizontal	Pass
		2595	-0.27	4.73	27.72	22.72	187.068	Horizontal	Pass
		2645	-0.16	4.75	27.68	22.77	189.234	Horizontal	Pass
5.0MHz Band 16 QAM	1/#Mid	2537.5	-0.47	4.54	27.75	22.74	187.932	Vertical	Pass
		2595	-0.33	4.69	27.72	22.70	186.209	Vertical	Pass
		2652.5	-0.26	4.71	27.71	22.74	187.932	Vertical	Pass
10.0MHz Band 16 QAM	1/#Mid	2540	-0.47	4.55	27.76	22.74	187.932	Vertical	Pass
		2595	-0.24	4.69	27.72	22.79	190.108	Vertical	Pass
		2650	-0.29	4.72	27.70	22.69	185.780	Vertical	Pass
15.0MHz Band 16 QAM	1/#Mid	2542.5	-0.52	4.55	27.77	22.70	186.209	Vertical	Pass
		2595	-0.33	4.69	27.72	22.70	186.209	Vertical	Pass
		2647.5	-0.27	4.72	27.69	22.70	186.209	Vertical	Pass
20.0MHz Band 16 QAM	1/#Mid	2545	-0.41	4.57	27.78	22.80	190.546	Vertical	Pass
		2595	-0.14	4.73	27.72	22.85	192.752	Vertical	Pass
		2645	-0.13	4.75	27.68	22.80	190.546	Vertical	Pass

Note:
SG Level= Signal generator output
Max. EIRP Average (dBm)= Antenna Gain(dB)+ SG Level (dBm)- Cable Loss(dBm)
Factor Gain(dB)=Antenna Gain(dB) + Amplifier Factor (dB)

8.14 LTE BAND 66

Radiated Power (EIRP) for Band 66									
Mode	RB/RB SIZE	Frequency	Result						Conclusion
			SG Level (dBm)	Cable Loss (dBm)	Factor (dB)	Max. EIRP Average (dBm)	Max. EIRP Average (mW)	Polarization Of Max. ERP	
1.4MHz Band QPSK	1/#Mid	1710.7	-3.72	3.76	28.24	20.76	119.124	Horizontal	Pass
		1745	-3.52	3.91	28.22	20.79	119.950	Horizontal	Pass
		1779.3	-3.52	3.93	28.2	20.75	118.850	Horizontal	Pass
3.0MHz Band QPSK	1/#Mid	1711.5	-3.78	3.77	28.23	20.68	116.950	Horizontal	Pass
		1745	-3.54	3.91	28.24	20.79	119.950	Horizontal	Pass
		1778.5	-3.57	3.94	28.25	20.74	118.577	Horizontal	Pass
5.0MHz Band QPSK	1/#Mid	1712.5	-3.88	3.77	28.31	20.66	116.413	Horizontal	Pass
		1745	-3.52	3.91	28.22	20.79	119.950	Horizontal	Pass
		1777.5	-3.54	3.94	28.2	20.72	118.032	Horizontal	Pass
10.0MHz Band QPSK	1/#Mid	1715	-3.78	3.79	28.33	20.76	119.124	Horizontal	Pass
		1745	-3.48	3.95	28.22	20.79	119.950	Horizontal	Pass
		1775	-3.47	3.97	28.19	20.75	118.850	Horizontal	Pass
15.0MHz Band QPSK	1/#Mid	1717.5	-3.81	3.79	28.34	20.74	118.577	Horizontal	Pass
		1745	-3.52	3.95	28.22	20.75	118.850	Horizontal	Pass
		1772.5	-3.44	3.97	28.18	20.77	119.399	Horizontal	Pass
20.0MHz Band QPSK	1/#Mid	1720	-3.84	3.81	28.35	20.70	117.490	Horizontal	Pass
		1745	-3.61	3.96	28.22	20.65	116.145	Horizontal	Pass
		1770	-3.41	4	28.16	20.75	118.850	Horizontal	Pass
1.4MHz Band QPSK	1/#Mid	1710.7	-3.79	3.76	28.24	20.69	117.220	Vertical	Pass
		1745	-3.53	3.91	28.22	20.78	119.674	Vertical	Pass
		1779.3	-3.61	3.93	28.2	20.66	116.413	Vertical	Pass
3.0MHz Band QPSK	1/#Mid	1711.5	-3.78	3.77	28.23	20.68	116.950	Vertical	Pass
		1745	-3.62	3.91	28.24	20.71	117.761	Vertical	Pass
		1778.5	-3.52	3.94	28.25	20.79	119.950	Vertical	Pass
5.0MHz Band QPSK	1/#Mid	1712.5	-3.88	3.77	28.31	20.66	116.413	Vertical	Pass
		1745	-3.52	3.91	28.22	20.79	119.950	Vertical	Pass
		1777.5	-3.48	3.94	28.2	20.78	119.674	Vertical	Pass
10.0MHz	1/#Mid	1715	-3.75	3.79	28.34	20.80	120.226	Vertical	Pass

Band		1745	-3.56	3.95	28.22	20.71	117.761	Vertical	Pass
QPSK		1775	-3.54	3.97	28.18	20.67	116.681	Vertical	Pass
15.0MHz		1717.5	-3.76	3.81	28.35	20.78	119.674	Vertical	Pass
Band	1/#Mid	1745	-3.55	3.96	28.22	20.71	117.761	Vertical	Pass
QPSK		1772.5	-3.47	4	28.16	20.69	117.220	Vertical	Pass
20.0MHz		1720	-3.71	3.79	28.34	20.84	121.339	Vertical	Pass
Band	1/#Mid	1745	-3.42	3.95	28.22	20.85	121.619	Vertical	Pass
QPSK		1770	-3.37	3.97	28.18	20.84	121.339	Vertical	Pass

Radiated Power (EIRP) for Band 66									
Mode	RB/RB SIZE	Frequency	Result						Conclusion
			SG Level (dBm)	Cable Loss (dBm)	Factor (dB)	Max. EIRP Average (dBm)	Max. EIRP Average (mW)	Polarization Of Max. ERP	
1.4MHz		1710.7	-4.12	3.76	28.24	20.36	108.643	Horizontal	Pass
Band 16	1/#Mid	1745	-3.91	3.91	28.22	20.40	109.648	Horizontal	Pass
QAM		1779.3	-3.81	3.93	28.2	20.46	111.173	Horizontal	Pass
3.0MHz		1711.5	-3.97	3.77	28.23	20.49	111.944	Horizontal	Pass
Band 16	1/#Mid	1745	-3.90	3.91	28.24	20.43	110.408	Horizontal	Pass
QAM		1778.5	-3.90	3.94	28.25	20.41	109.901	Horizontal	Pass
5.0MHz		1712.5	-4.11	3.77	28.31	20.43	110.408	Horizontal	Pass
Band 16	1/#Mid	1745	-3.82	3.91	28.22	20.49	111.944	Horizontal	Pass
QAM		1777.5	-3.87	3.94	28.2	20.39	109.396	Horizontal	Pass
10.0MHz		1715	-4.05	3.79	28.33	20.49	111.944	Horizontal	Pass
Band 16	1/#Mid	1745	-3.85	3.95	28.22	20.42	110.154	Horizontal	Pass
QAM		1775	-3.77	3.97	28.19	20.45	110.917	Horizontal	Pass
15.0MHz		1717.5	-4.20	3.79	28.34	20.35	108.393	Horizontal	Pass
Band 16	1/#Mid	1745	-3.80	3.95	28.22	20.47	111.429	Horizontal	Pass
QAM		1772.5	-3.87	3.97	28.18	20.34	108.143	Horizontal	Pass
20.0MHz		1720	-4.15	3.81	28.35	20.39	109.396	Horizontal	Pass
Band 16	1/#Mid	1745	-3.90	3.96	28.22	20.36	108.643	Horizontal	Pass
QAM		1770	-3.77	4	28.16	20.39	109.396	Horizontal	Pass
1.4MHz		1710.7	-4.12	3.76	28.24	20.36	108.643	Vertical	Pass
Band 16	1/#Mid	1745	-3.90	3.91	28.22	20.41	109.901	Vertical	Pass
QAM		1779.3	-3.88	3.93	28.2	20.39	109.396	Vertical	Pass
3.0MHz	1/#Mid	1711.5	-4.08	3.77	28.23	20.38	109.144	Vertical	Pass
Band 16		1745	-3.98	3.91	28.24	20.35	108.393	Vertical	Pass

QAM		1778.5	-3.95	3.94	28.25	20.36	108.643	Vertical	Pass
5.0MHz		1712.5	-4.20	3.77	28.31	20.34	108.143	Vertical	Pass
Band 16	1/#Mid	1745	-3.91	3.91	28.22	20.40	109.648	Vertical	Pass
QAM		1777.5	-3.81	3.94	28.2	20.45	110.917	Vertical	Pass
10.0MHz		1715	-4.19	3.79	28.34	20.36	108.643	Vertical	Pass
Band 16	1/#Mid	1745	-3.78	3.95	28.22	20.49	111.944	Vertical	Pass
QAM		1775	-3.71	3.97	28.18	20.50	112.202	Vertical	Pass
15.0MHz		1717.5	-4.15	3.81	28.35	20.39	109.396	Vertical	Pass
Band 16	1/#Mid	1745	-3.91	3.96	28.22	20.35	108.393	Vertical	Pass
QAM		1772.5	-3.75	4	28.16	20.41	109.901	Vertical	Pass
20.0MHz		1720	-4.00	3.79	28.34	20.55	113.501	Vertical	Pass
Band 16	1/#Mid	1745	-3.75	3.95	28.22	20.52	112.720	Vertical	Pass
QAM		1770	-3.68	3.97	28.18	20.53	112.980	Vertical	Pass

Note:
SG Level= Signal generator output
Max. EIRP Average (dBm)= Antenna Gain(dB)+ SG Level (dBm)- Cable Loss(dBm)
Factor Gain(dB)=Antenna Gain(dB) + Amplifier Factor (dB)

8.15 LTE BAND 71

Radiated Power (ERP) for Band 71										
Mode	RB/RB SIZE	Frequency	Result							Conclusion
			SG Level (dBm)	Cable Loss (dBm)	Factor (dB)	Correction (dB)	Max. EPR Average (dBm)	Max. EPR Average (mW)	Polarization Of Max. ERP	
5.0MHz Band QPSK	1/#Mid	665.5	6.61	1.91	19.21	2.15	21.76	149.968	Vertical	Pass
		680.5	6.47	1.91	19.26	2.15	21.67	146.893	Vertical	Pass
		695.5	6.47	1.93	19.34	2.15	21.73	148.936	Vertical	Pass
10.0MHz Band QPSK	1/#Mid	668	6.53	1.91	19.21	2.15	21.68	147.231	Vertical	Pass
		680.5	6.52	1.91	19.26	2.15	21.72	148.594	Vertical	Pass
		693	6.41	1.93	19.34	2.15	21.67	146.893	Vertical	Pass
15.0MHz Band QPSK	1/#Mid	670.5	6.58	1.91	19.23	2.15	21.75	149.624	Vertical	Pass
		680.5	6.57	1.91	19.26	2.15	21.77	150.314	Vertical	Pass
		690.5	6.48	1.92	19.33	2.15	21.74	149.279	Vertical	Pass
20.0MHz Band QPSK	1/#Mid	673	6.57	1.91	19.25	2.15	21.76	149.968	Vertical	Pass
		683	6.45	1.91	19.26	2.15	21.65	146.218	Vertical	Pass
		688	6.49	1.92	19.32	2.15	21.74	149.279	Vertical	Pass
5.0MHz Band QPSK	1/#Mid	665.5	6.51	1.91	19.21	2.15	21.66	146.555	Horizontal	Pass
		680.5	6.51	1.91	19.26	2.15	21.71	148.252	Horizontal	Pass
		695.5	6.48	1.93	19.34	2.15	21.74	149.279	Horizontal	Pass
10.0MHz Band QPSK	1/#Mid	668	6.58	1.91	19.21	2.15	21.73	148.936	Horizontal	Pass
		680.5	6.49	1.91	19.26	2.15	21.69	147.571	Horizontal	Pass
		693	6.53	1.93	19.34	2.15	21.79	151.008	Horizontal	Pass
15.0MHz Band QPSK	1/#Mid	670.5	6.62	1.91	19.23	2.15	21.79	151.008	Horizontal	Pass
		680.5	6.42	1.91	19.26	2.15	21.62	145.211	Horizontal	Pass
		690.5	6.51	1.92	19.33	2.15	21.77	150.314	Horizontal	Pass
20.0MHz Band QPSK	1/#Mid	673	6.65	1.91	19.25	2.15	21.84	152.757	Horizontal	Pass
		683	6.62	1.91	19.26	2.15	21.82	152.055	Horizontal	Pass
		688	6.57	1.92	19.32	2.15	21.82	152.055	Horizontal	Pass

Radiated Power (ERP) for Band 71										
Mode	RB/RB SIZE	Frequency	Result							Conclusion
			SG Level (dBm)	Cable Loss (dBm)	Factor (dB)	Correction (dB)	Max. EPR Average (dBm)	Max. EPR Average (mW)	Polarization Of Max. ERP	
5.0MHz Band 16 QAM	1/#Mid	665.5	5.61	1.91	19.21	2.15	20.76	119.124	Vertical	Pass
		680.5	5.64	1.91	19.26	2.15	20.84	121.339	Vertical	Pass
		695.5	5.59	1.93	19.34	2.15	20.85	121.619	Vertical	Pass
10.0MHz Band 16 QAM	1/#Mid	668	5.73	1.91	19.21	2.15	20.88	122.462	Vertical	Pass
		680.5	5.55	1.91	19.26	2.15	20.75	118.850	Vertical	Pass
		693	5.62	1.93	19.34	2.15	20.88	122.462	Vertical	Pass
15.0MHz Band 16 QAM	1/#Mid	670.5	5.68	1.91	19.23	2.15	20.85	121.619	Vertical	Pass
		680.5	5.58	1.91	19.26	2.15	20.78	119.674	Vertical	Pass
		690.5	5.64	1.92	19.33	2.15	20.90	123.027	Vertical	Pass
20.0MHz Band 16 QAM	1/#Mid	673	5.70	1.91	19.25	2.15	20.89	122.744	Vertical	Pass
		683	5.58	1.91	19.26	2.15	20.78	119.674	Vertical	Pass
		688	5.58	1.92	19.32	2.15	20.83	121.060	Vertical	Pass
5.0MHz Band 16 QAM	1/#Mid	665.5	5.70	1.91	19.21	2.15	20.85	121.619	Horizontal	Pass
		680.5	5.61	1.91	19.26	2.15	20.81	120.504	Horizontal	Pass
		695.5	5.52	1.93	19.34	2.15	20.78	119.674	Horizontal	Pass
10.0MHz Band 16 QAM	1/#Mid	668	5.66	1.91	19.21	2.15	20.81	120.504	Horizontal	Pass
		680.5	5.69	1.91	19.26	2.15	20.89	122.744	Horizontal	Pass
		693	5.55	1.93	19.34	2.15	20.81	120.504	Horizontal	Pass
15.0MHz Band 16 QAM	1/#Mid	670.5	5.67	1.91	19.23	2.15	20.84	121.339	Horizontal	Pass
		680.5	5.58	1.91	19.26	2.15	20.78	119.674	Horizontal	Pass
		690.5	5.57	1.92	19.33	2.15	20.83	121.060	Horizontal	Pass
20.0MHz Band 16 QAM	1/#Mid	673	5.73	1.91	19.25	2.15	20.92	123.595	Horizontal	Pass
		683	5.73	1.91	19.26	2.15	20.93	123.880	Horizontal	Pass
		688	5.67	1.92	19.32	2.15	20.92	123.595	Horizontal	Pass

Note:
SG Level= Signal generator output
Max. EIRP Average (dBm)= Antenna Gain(dB)+ SG Level (dBm)- Cable Loss(dBm)
Factor Gain(dB)=Antenna Gain(dB) + Amplifier Factor (dB)

9. SPURIOUS RADIATION EMISSION

RULE PART(S)

FCC: §2.1053, §22.917, §24.238, §27.53 and §90.691

LIMIT

§22.917 (e) and §24.238 and §90.691 (a): Out of band emissions. The power of any emission outside of the authorized operating frequency ranges must be attenuated below the transmitting power (P) by a factor of at least 43 + 10 log (P) dB.

§27.53 (g) For operations in the 698–746 MHz band, the power of any emission outside a licensee's frequency band(s) of operation shall be attenuated below the transmitter power (P) within the licensed band(s) of operation, measured in watts, by at least 43 + 10 log (P) dB.

§27.53 (h) For operations in the 1710–1755 MHz and 2110–2155 MHz bands, the power of any emission outside a licensee's frequency block shall be attenuated below the transmitter power (P) by at least 43 + 10 log10(P) dB.

TEST PROCEDURE

For Cellular equipment - Compliance with these rules is based on the use of measurement instrumentation employing a resolution bandwidth of 100 kHz or greater. In the 1 MHz bands immediately outside and adjacent to the frequency block a resolution bandwidth of at least one percent of the emission bandwidth of the fundamental emission of the transmitter may be employed. A narrower resolution bandwidth is permitted in all cases to improve measurement accuracy provided the measured power is integrated over the full required measurement bandwidth (i.e. 100 kHz or 1 percent of emission bandwidth, as specified). The emission bandwidth is defined as the width of the signal between two points, one below the carrier center frequency and one above the carrier center frequency, outside of which all emissions are attenuated at least 26 dB below the transmitter power.

For PCS equipment - Compliance with these rules is based on the use of measurement instrumentation employing a resolution bandwidth of 1 MHz or greater. However, in the 1 MHz bands immediately outside and adjacent to the frequency block a resolution bandwidth of at least one percent of the emission bandwidth of the fundamental emission of the transmitter may be employed. A narrower resolution bandwidth is permitted in all cases to improve measurement accuracy provided the measured power is integrated over the full required measurement bandwidth (i.e. 1 MHz or 1 percent of emission bandwidth, as specified). The emission bandwidth is defined as the width of the signal between two points, one below the carrier center frequency and one above the carrier center frequency, outside of which all emissions are attenuated at least 26 dB below the transmitter power.

The unwanted emission power shall be measured with a resolution bandwidth of at least 1% of the occupied bandwidth in the 1 MHz band immediately outside and adjacent to the channel edge of the equipment. Beyond the 1 MHz band immediately outside the channel edge of the equipment, a resolution bandwidth of 1 MHz shall be employed. A narrower resolution bandwidth is allowed to be used provided that the measured power is integrated over the full required measurement bandwidth of 1 MHz or 1% of the occupied bandwidth as applicable.

The power of any unwanted emissions measured from the channel edge of the equipment shall be attenuated below the transmitter power, P (dBW), as follows:
a. for base station and subscriber equipment, other than mobile subscriber equipment, the attenuation shall not be less than 43 + 10 Log10 (p), dB; and
b. for mobile subscriber equipment, the attenuation shall not be less than 43 + 10 Log10 (p), dB at the channel edges and 55 + 10 Log10 (p) at 5.5 MHz away and beyond the channel edges where p in (a) and (b) is the transmitter power measured in watts.

MODES TESTED

LTE Band 2/4/5/7/12/13/14/17/25/26/38/41/66/71

RESULTS
PASS

9.1 LTE BAND 2

QPSK EIRP POWER FOR LTE BAND 2 (1.4MHZ BANDWIDTH)

Test Results for Low Channel 1850.7MHz							
Frequency(MHz)	SG Level(dBm)	Cable Loss(dB)	Antenna Gain(dB)	Absolute Level(dBm)	Limit （dBm）	Margin(dBm)	Polarity
3701.4	-52.90	4.04	33.51	-23.43	-13	-10.43	Horizontal
3701.4	-45.50	4.04	33.51	-16.03	-13	-3.03	Vertical
5552.1	-44.69	5.24	35.84	-14.09	-13	-1.09	Vertical
5552.1	-50.67	5.24	35.84	-20.07	-13	-7.07	Horizontal
211.4	-37.37	1.43	16.02	-22.78	-13	-9.78	Vertical
286.4	-40.09	1.30	17.99	-23.40	-13	-10.40	Horizontal
Test Results for Mid Channel 1880MHz							
3760.0	-52.60	4.04	33.56	-23.08	-13	-10.08	Horizontal
3760.0	-53.64	4.04	33.56	-24.12	-13	-11.12	Vertical
5640.0	-52.25	5.24	35.91	-21.58	-13	-8.58	Vertical
5640.0	-49.42	5.24	35.91	-18.75	-13	-5.75	Horizontal
195.0	-40.52	1.62	16.97	-25.17	-13	-12.17	Vertical
404.7	-43.53	1.74	15.98	-29.30	-13	-16.30	Horizontal
Test Results for High Channel 1909.3MHz							
3818.6	-47.77	4.04	34.00	-17.81	-13	-4.81	Horizontal
3818.6	-52.29	4.04	34.00	-22.33	-13	-9.33	Vertical
5727.9	-50.63	5.24	36.04	-19.83	-13	-6.83	Vertical
5727.9	-52.59	5.24	36.04	-21.79	-13	-8.79	Horizontal
180.1	-38.74	1.42	17.29	-22.87	-13	-9.87	Vertical
256.0	-41.66	1.50	17.90	-25.25	-13	-12.25	Horizontal

QPSK EIRP POWER FOR LTE BAND 2 (20.0MHZ BANDWIDTH)

Test Results for Low Channel 1860MHz							
Frequency(MHz)	SG Level(dBm)	Cable Loss(dB)	Antenna Gain(dB)	Absolute Level(dBm)	Limit （dBm）	Margin(dBm)	Polarity
3720.0	-51.95	4.07	33.54	-22.48	-13	-9.48	Horizontal
3720.0	-52.37	4.07	33.54	-22.90	-13	-9.90	Vertical
5580.0	-52.45	5.28	35.86	-21.87	-13	-8.87	Vertical
5580.0	-49.99	5.28	35.86	-19.41	-13	-6.41	Horizontal
178.7	-39.21	1.58	16.89	-23.89	-13	-10.89	Vertical
298.5	-44.32	1.76	17.26	-28.82	-13	-15.82	Horizontal
Test Results for Mid Channel 1880MHz							
3760.0	-53.88	4.04	33.56	-24.36	-13	-11.36	Horizontal
3760.0	-52.12	4.04	33.56	-22.60	-13	-9.60	Vertical
5640.0	-48.95	5.24	35.91	-18.28	-13	-5.28	Vertical
5640.0	-52.84	5.24	35.91	-22.17	-13	-9.17	Horizontal
195.8	-41.05	1.46	16.27	-26.24	-13	-13.24	Vertical
431.8	-41.38	1.59	15.15	-27.82	-13	-14.82	Horizontal
Test Results for High Channel 1900MHz							
3800.0	-47.11	4.04	34.00	-17.15	-13	-4.15	Horizontal
3800.0	-45.39	4.04	34.00	-15.43	-13	-2.43	Vertical
5700.0	-53.87	5.24	36.04	-23.07	-13	-10.07	Vertical
5700.0	-50.30	5.24	36.04	-19.50	-13	-6.50	Horizontal
183.6	-39.72	1.36	17.39	-23.68	-13	-10.68	Vertical
243.2	-35.01	1.66	15.39	-21.28	-13	-8.28	Horizontal

Note: PMea(dBm)= Power(dBm)+ ARpl (dBm)

. Over Limit= : PMea(dBm)-Limit(dBm)

. Both QPSK and 16QAM has been tested, the worst case is QPSK mode, the report just reported the worst case.

9.2 LTE BAND 4

QPSK EIRP POWER FOR LTE BAND 4 (1.4MHZ BANDWIDTH)

Test Results for Low Channel 1710.7MHz							
Frequency(MHz)	SG Level(dBm)	Cable Loss(dB)	Antenna Gain(dB)	Absolute Level(dBm)	Limit （dBm）	Margin(dBm)	Polarity
3421.4	-52.47	4.02	29.80	-26.69	-13	-13.69	Horizontal
3421.4	-51.42	4.02	29.80	-25.64	-13	-12.64	Vertical
5132.1	-47.13	5.24	35.84	-16.53	-13	-3.53	Vertical
5132.1	-52.16	5.24	35.84	-21.56	-13	-8.56	Horizontal
176.0	-41.06	1.68	16.04	-26.70	-13	-13.70	Vertical
440.6	-37.20	1.78	17.74	-21.24	-13	-8.24	Horizontal
Test Results for Mid Channel 1732.5MHz							
3465.0	-44.71	4.03	30.00	-18.74	-13	-5.74	Horizontal
3465.0	-48.90	4.03	30.00	-22.93	-13	-9.93	Vertical
5197.5	-47.77	5.25	35.86	-17.16	-13	-4.16	Vertical
5197.5	-50.43	5.25	35.86	-19.82	-13	-6.82	Horizontal
190.0	-40.24	1.72	17.69	-24.27	-13	-11.27	Vertical
393.9	-36.97	1.62	16.02	-22.56	-13	-9.56	Horizontal
Test Results for High Channel 1754.3MHz							
3508.6	-45.05	4.05	30.01	-19.09	-13	-6.09	Horizontal
3508.6	-52.54	4.05	30.01	-26.58	-13	-13.58	Vertical
5262.9	-52.86	5.26	35.86	-22.26	-13	-9.26	Vertical
5262.9	-49.70	5.26	35.86	-19.10	-13	-6.10	Horizontal
182.3	-40.08	1.80	16.69	-25.19	-13	-12.19	Vertical
466.0	-35.98	1.75	16.66	-21.08	-13	-8.08	Horizontal

QPSK EIRP POWER FOR LTE BAND 4 (20.0MHZ BANDWIDTH)

Test Results for Low Channel 1720MHz							
Frequency(MHz)	SG Level(dBm)	Cable Loss(dB)	Antenna Gain(dB)	Absolute Level(dBm)	Limit （dBm）	Margin(dBm)	Polarity
3440.0	-49.82	4.02	29.80	-24.04	-13	-11.04	Horizontal
3440.0	-45.32	4.02	29.80	-19.54	-13	-6.54	Vertical
5160.0	-45.18	5.24	35.84	-14.58	-13	-1.58	Vertical
5160.0	-53.27	5.24	35.84	-22.67	-13	-9.67	Horizontal
203.7	-38.52	1.57	17.26	-22.83	-13	-9.83	Vertical
338.7	-41.91	1.78	16.35	-27.34	-13	-14.34	Horizontal
Test Results for Mid Channel 1732.5MHz							
3465.0	-49.82	4.03	30.00	-23.85	-13	-10.85	Horizontal
3465.0	-46.43	4.03	30.00	-20.46	-13	-7.46	Vertical
5197.5	-44.72	5.25	35.86	-14.11	-13	-1.11	Vertical
5197.5	-49.04	5.25	35.86	-18.43	-13	-5.43	Horizontal
185.2	-37.59	1.44	17.95	-21.08	-13	-8.08	Vertical
351.1	-41.80	1.65	16.09	-27.36	-13	-14.36	Horizontal
Test Results for High Channel 1745MHz							
3490.0	-48.02	4.05	27.68	-24.39	-13	-11.39	Horizontal
3490.0	-45.53	4.05	27.68	-21.90	-13	-8.90	Vertical
5235.0	-50.43	5.26	35.86	-19.83	-13	-6.83	Vertical
5235.0	-52.28	5.26	35.86	-21.68	-13	-8.68	Horizontal
192.6	-34.96	1.61	16.85	-19.72	-13	-6.72	Vertical
396.8	-35.86	1.61	15.19	-22.28	-13	-9.28	Horizontal

Note: PMea(dBm)= Power(dBm)+ ARpl (dBm)

. Over Limit= : PMea(dBm)-Limit(dBm)

. Both QPSK and 16QAM has been tested, the worst case is QPSK mode, the report just reported the worst case.

9.3 LTE BAND 5

QPSK EIRP POWER FOR LTE BAND 5 (1.4MHZ BANDWIDTH)

Test Results for Low Channel 824.7MHz							
Frequency(MHz)	SG Level(dBm)	Cable Loss(dB)	Antenna Gain(dB)	Absolute Level(dBm)	Limit （dBm）	Margin(dBm)	Polarity
1649.4	-51.50	2.78	27.50	-26.78	-13	-13.78	Horizontal
1649.4	-52.65	2.78	27.50	-27.93	-13	-14.93	Vertical
2474.1	-47.12	2.90	27.80	-22.22	-13	-9.22	Vertical
2474.1	-50.28	2.90	27.80	-25.38	-13	-12.38	Horizontal
206.6	-36.40	1.76	17.59	-20.57	-13	-7.57	Vertical
357.8	-34.02	1.63	15.87	-19.78	-13	-6.78	Horizontal
Test Results For Mid Channel 836.5MHz							
1673.0	-52.59	2.80	27.48	-27.91	-13	-14.91	Horizontal
1673.0	-47.23	2.80	27.48	-22.55	-13	-9.55	Vertical
2509.5	-45.43	2.91	27.70	-20.64	-13	-7.64	Vertical
2509.5	-51.09	2.91	27.70	-26.30	-13	-13.30	Horizontal
188.5	-38.96	1.61	15.68	-24.89	-13	-11.89	Vertical
454.4	-41.72	1.59	17.52	-25.80	-13	-12.80	Horizontal
Test Results for High Channel 848.3MHz							
1696.6	-46.63	2.82	27.43	-22.02	-13	-9.02	Horizontal
1696.6	-46.12	2.82	27.43	-21.51	-13	-8.51	Vertical
2544.9	-52.56	2.92	27.74	-27.74	-13	-14.74	Vertical
2544.9	-50.69	2.92	27.74	-25.87	-13	-12.87	Horizontal
186.8	-36.66	1.69	16.67	-21.67	-13	-8.67	Vertical
371.0	-39.49	1.70	17.18	-24.01	-13	-11.01	Horizontal

QPSK EIRP POWER FOR LTE BAND 5 (10MHZ BANDWIDTH)

Test Results for Low Channel 829MHz							
Frequency(MHz)	SG Level(dBm)	Cable Loss(dB)	Antenna Gain(dB)	Absolute Level(dBm)	Limit （dBm）	Margin(dBm)	Polarity
1658.0	-44.43	2.78	27.50	-19.71	-13	-6.71	Horizontal
1658.0	-45.97	2.78	27.50	-21.25	-13	-8.25	Vertical
2487.0	-50.25	2.90	27.80	-25.35	-13	-12.35	Vertical
2487.0	-53.87	2.90	27.80	-28.97	-13	-15.97	Horizontal
177.0	-42.85	1.71	15.57	-28.99	-13	-15.99	Vertical
384.2	-40.82	1.34	16.40	-25.76	-13	-12.76	Horizontal
Test Results for Mid Channel 836.5MHz							
1673.0	-44.85	2.80	27.48	-20.17	-13	-7.17	Horizontal
1673.0	-53.20	2.80	27.48	-28.52	-13	-15.52	Vertical
2509.5	-51.78	2.91	27.70	-26.99	-13	-13.99	Vertical
2509.5	-50.38	2.91	27.70	-25.59	-13	-12.59	Horizontal
181.2	-35.99	1.44	17.04	-20.39	-13	-7.39	Vertical
404.6	-37.61	1.76	17.62	-21.75	-13	-8.75	Horizontal
Test Results for High Channel 844MHz							
1688.0	-44.16	2.82	27.43	-19.55	-13	-6.55	Horizontal
1688.0	-44.99	2.82	27.43	-20.38	-13	-7.38	Vertical
2532.0	-53.97	2.92	27.74	-29.15	-13	-16.15	Vertical
2532.0	-53.84	2.92	27.74	-29.02	-13	-16.02	Horizontal
188.0	-41.93	1.74	17.70	-25.97	-13	-12.97	Vertical
358.0	-40.75	1.41	17.46	-24.69	-13	-11.69	Horizontal

Note: PMea(dBm)= Power(dBm)+ ARpl (dBm)

. Over Limit= : PMea(dBm)-Limit(dBm)

. Both QPSK and 16QAM has been tested, the worst case is QPSK mode, the report just reported the worst case.

9.4 LTE BAND 7

QPSK EIRP POWER FOR LTE BAND 7 (5.0MHZ BANDWIDTH)

Test Results for Low Channel 2502.5MHz							
Frequency(MHz)	SG Level(dBm)	Cable Loss(dB)	Antenna Factor(dB)	Absolute Level(dBm)	Limit （dBm）	Margin(dBm)	Polarity
5005.0	-63.84	5.23	35.81	-33.26	-25	-8.26	Horizontal
5005.0	-61.03	5.23	35.81	-30.45	-25	-5.45	Vertical
7507.5	-61.97	5.67	36.85	-30.79	-25	-5.79	Vertical
7507.5	-60.40	5.67	36.85	-29.22	-25	-4.22	Horizontal
176.5	-54.85	1.73	17.97	-38.61	-25	-13.61	Vertical
261.0	-46.00	1.38	15.11	-32.27	-25	-7.27	Horizontal
Test Results for Mid Channel 2535MHz							
5070.0	-60.16	5.23	35.82	-29.57	-25	-4.57	Horizontal
5070.0	-61.49	5.23	35.82	-30.90	-25	-5.90	Vertical
7605.0	-62.91	5.67	36.85	-31.73	-25	-6.73	Vertical
7605.0	-60.33	5.67	36.85	-29.15	-25	-4.15	Horizontal
192.8	-52.75	1.77	16.17	-38.34	-25	-13.34	Vertical
251.7	-53.24	1.63	15.21	-39.66	-25	-14.66	Horizontal
Test Results for High Channel 2567.5MHz							
5135.0	-62.70	5.24	35.83	-32.11	-25	-7.11	Horizontal
5135.0	-62.32	5.24	35.83	-31.73	-25	-6.73	Vertical
7702.5	-63.83	5.68	36.87	-32.64	-25	-7.64	Vertical
7702.5	-64.83	5.68	36.87	-33.64	-25	-8.64	Horizontal
183.1	-52.15	1.58	17.56	-36.17	-25	-11.17	Vertical
350.9	-53.35	1.45	16.58	-38.22	-25	-13.22	Horizontal

QPSK EIRP POWER FOR LTE BAND 7 (20.0MHZ BANDWIDTH)

Test Results for Low Channel 2510MHz							
Frequency(MHz)	SG Level(dBm)	Cable Loss(dB)	Antenna Factor(dB)	Absolute Level(dBm)	Limit （dBm）	Margin(dBm)	Polarity
5020.0	-63.00	5.23	35.82	-32.41	-25	-7.41	Horizontal
5020.0	-64.83	5.23	35.82	-34.24	-25	-9.24	Vertical
7530.0	-60.42	5.67	36.86	-29.23	-25	-4.23	Vertical
7530.0	-64.07	5.67	36.86	-32.88	-25	-7.88	Horizontal
210.1	-49.11	1.63	15.76	-34.98	-25	-9.98	Vertical
336.0	-49.43	1.71	15.44	-35.70	-25	-10.70	Horizontal
Test Results for Mid Channel 2535MHz							
5070.0	-64.95	5.23	35.82	-34.36	-25	-9.36	Horizontal
5070.0	-60.55	5.23	35.82	-29.96	-25	-4.96	Vertical
7605.0	-59.74	5.67	36.85	-28.56	-25	-3.56	Vertical
7605.0	-59.78	5.67	36.85	-28.60	-25	-3.60	Horizontal
178.6	-51.73	1.79	16.84	-36.67	-25	-11.67	Vertical
468.3	-49.88	1.71	17.64	-33.95	-25	-8.95	Horizontal
Test Results for High Channel 2560MHz							
5120.0	-64.77	5.24	35.83	-34.18	-25	-9.18	Horizontal
5120.0	-60.70	5.24	35.83	-30.11	-25	-5.11	Vertical
7680.0	-64.05	5.70	36.88	-32.87	-25	-7.87	Vertical
7680.0	-60.79	5.70	36.88	-29.61	-25	-4.61	Horizontal
199.2	-45.40	1.79	16.84	-30.34	-25	-5.34	Vertical
326.8	-48.44	1.71	17.64	-32.51	-25	-7.51	Horizontal

Note: Spurious Emission Level = Spectrum Analyzer Read Value + Cable Loss+ Antenna Factor + 11.74

. Margin = Spurious Emission Level - Limit

. Both QPSK and 16QAM has been tested, the worst case is QPSK mode, the report just reported the worst case.

9.5 LTE BAND 12

QPSK EIRP POWER FOR LTE BAND 12 (1.4MHZ BANDWIDTH)

Test Results for Low Channel 699.7MHz							
Frequency(MHz)	SG Level(dBm)	Cable Loss(dB)	Antenna Gain(dB)	Absolute Level(dBm)	Limit （dBm）	Margin(dBm)	Polarity
1399.4	-48.30	2.60	27.20	-23.70	-13	-10.70	Horizontal
1399.4	-53.79	2.60	27.20	-29.19	-13	-16.19	Vertical
2099.1	-46.90	2.85	27.54	-22.21	-13	-9.21	Vertical
2099.1	-53.60	2.85	27.54	-28.91	-13	-15.91	Horizontal
200.0	-41.52	1.49	17.78	-25.23	-13	-12.23	Vertical
327.9	-43.21	1.36	17.33	-27.24	-13	-14.24	Horizontal
Test Results For Mid Channel 707.5MHz							
1415.0	-46.29	2.61	27.28	-21.62	-13	-8.62	Horizontal
1415.0	-50.41	2.61	27.28	-25.74	-13	-12.74	Vertical
2122.5	-46.40	2.87	27.59	-21.68	-13	-8.68	Vertical
2122.5	-53.81	2.87	27.59	-29.09	-13	-16.09	Horizontal
211.6	-37.00	1.73	15.74	-22.99	-13	-9.99	Vertical
376.7	-38.13	1.62	15.79	-23.96	-13	-10.96	Horizontal
Test Results for High Channel 715.3MHz							
1430.6	-53.38	2.63	27.28	-28.73	-13	-15.73	Horizontal
1430.6	-48.98	2.63	27.28	-24.33	-13	-11.33	Vertical
2145.9	-50.71	2.88	27.60	-25.99	-13	-12.99	Vertical
2145.9	-49.19	2.88	27.60	-24.47	-13	-11.47	Horizontal
200.8	-44.69	1.61	18.00	-28.30	-13	-15.30	Vertical
367.8	-34.44	1.45	15.49	-20.41	-13	-7.41	Horizontal

QPSK EIRP POWER FOR LTE BAND 12 (10MHZ BANDWIDTH)

Test Results for Low Channel 704MHz							
Frequency(MHz)	SG Level(dBm)	Cable Loss(dB)	Antenna Gain(dB)	Absolute Level(dBm)	Limit （dBm）	Margin(dBm)	Polarity
1408.0	-53.65	2.61	27.26	-29.00	-13	-16.00	Horizontal
1408.0	-46.48	2.61	27.26	-21.83	-13	-8.83	Vertical
2112.0	-51.81	2.87	27.58	-27.10	-13	-14.10	Vertical
2112.0	-52.03	2.87	27.58	-27.32	-13	-14.32	Horizontal
184.3	-43.04	1.31	16.97	-27.38	-13	-14.38	Vertical
265.5	-37.00	1.65	16.70	-21.95	-13	-8.95	Horizontal
Test Results for Mid Channel 707.5MHz							
1415.0	-53.17	2.61	27.28	-28.50	-13	-15.50	Horizontal
1415.0	-52.85	2.61	27.28	-28.18	-13	-15.18	Vertical
2122.5	-45.10	2.87	27.59	-20.38	-13	-7.38	Vertical
2122.5	-53.30	2.87	27.59	-28.58	-13	-15.58	Horizontal
192.8	-43.69	1.72	17.99	-27.42	-13	-14.42	Vertical
241.6	-42.27	1.73	17.94	-26.06	-13	-13.06	Horizontal
Test Results for High Channel 711MHz							
1422.0	-49.12	2.62	27.28	-24.46	-13	-11.46	Horizontal
1422.0	-52.08	2.62	27.28	-27.42	-13	-14.42	Vertical
2133.0	-53.15	2.87	27.60	-28.42	-13	-15.42	Vertical
2133.0	-51.02	2.87	27.60	-26.29	-13	-13.29	Horizontal
189.7	-36.19	1.58	15.93	-21.84	-13	-8.84	Vertical
333.3	-37.32	1.36	15.59	-23.09	-13	-10.09	Horizontal

Note: PMea(dBm)= Power(dBm)+ ARpl (dBm)

. Over Limit= : PMea(dBm)-Limit(dBm)

. Both QPSK and 16QAM has been tested, the worst case is QPSK mode, the report just reported the worst case.

9.6 LTE BAND 13

QPSK EIRP POWER FOR LTE BAND 13 (5MHZ BANDWIDTH)

Test Results for Low Channel 779.5MHz							
Frequency(MHz)	SG Level(dBm)	Cable Loss(dB)	Antenna Gain(dB)	Absolute Level(dBm)	Limit （dBm）	Margin(dBm)	Polarity
1559.0	-71.41	2.61	27.28	-46.74	-40	-6.74	Horizontal
1559.0	-73.34	2.61	27.28	-48.67	-40	-8.67	Vertical
2338.5	-73.70	2.87	27.59	-48.98	-13	-35.98	Vertical
2338.5	-72.00	2.87	27.59	-47.28	-13	-34.28	Horizontal
211.0	-70.80	1.71	16.15	-56.36	-13	-43.36	Vertical
273.2	-67.22	1.41	17.32	-51.31	-13	-38.31	Horizontal
Test Results For Mid Channel 782MHz							
1564.0	-67.65	2.62	27.30	-42.97	-40	-2.97	Horizontal
1564.0	-73.89	2.62	27.30	-49.21	-40	-9.21	Vertical
2346.0	-71.05	2.87	27.62	-46.30	-13	-33.30	Vertical
2346.0	-73.41	2.87	27.62	-48.66	-13	-35.66	Horizontal
201.8	-68.97	1.42	15.25	-55.15	-13	-42.15	Vertical
238.9	-67.53	1.36	17.19	-51.70	-13	-38.70	Horizontal
Test Results for High Channel 784.5MHz							
1569.0	-76.68	2.66	27.28	-52.06	-40	-12.06	Horizontal
1569.0	-69.81	2.66	27.28	-45.19	-40	-5.19	Vertical
2353.5	-72.85	2.88	27.60	-48.13	-13	-35.13	Vertical
2353.5	-72.97	2.88	27.60	-48.25	-13	-35.25	Horizontal
175.4	-68.18	1.32	17.29	-52.21	-13	-39.21	Vertical
345.4	-73.43	1.72	16.89	-58.26	-13	-45.26	Horizontal

QPSK EIRP POWER FOR LTE BAND 13 (10MHZ BANDWIDTH)

Test Results for Channel 782MHz							
Frequency(MHz)	SG Level(dBm)	Cable Loss(dB)	Antenna Gain(dB)	Absolute Level(dBm)	Limit （dBm）	Margin(dBm)	Polarity
1564.0	-69.57	2.62	27.30	-44.89	-40	-4.89	Horizontal
1564.0	-67.57	2.62	27.30	-42.89	-40	-2.89	Vertical
2346.0	-69.06	2.87	27.62	-44.31	-13	-31.31	Vertical
2346.0	-74.81	2.87	27.62	-50.06	-13	-37.06	Horizontal
178.3	-72.60	1.35	16.91	-57.04	-13	-44.04	Vertical
466.4	-74.49	1.62	16.31	-59.80	-13	-46.80	Horizontal

Note: PMea(dBm)= Power(dBm)+ ARpl (dBm)

. Over Limit= : PMea(dBm)-Limit(dBm)

. Both QPSK and 16QAM has been tested, the worst case is QPSK mode, the report just reported the worst case.

9.7 LTE BAND 14

QPSK EIRP POWER FOR LTE BAND 14 (5MHZ BANDWIDTH)

Test Results for Low Channel 790.5MHz							
Frequency(MHz)	SG Level(dBm)	Cable Loss(dB)	Antenna Gain(dB)	Absolute Level(dBm)	Limit （dBm）	Margin(dBm)	Polarity
1581.0	-67.42	2.63	27.28	-42.77	-40	-2.77	Horizontal
1581.0	-71.79	2.63	27.28	-47.14	-40	-7.14	Vertical
2371.5	-67.83	2.89	27.59	-43.13	-13	-30.13	Vertical
2371.5	-69.25	2.89	27.59	-44.55	-13	-31.55	Horizontal
200.6	-71.28	1.71	16.15	-56.84	-13	-43.84	Vertical
368.9	-74.53	1.41	17.32	-58.62	-13	-45.62	Horizontal
Test Results For Mid Channel 793MHz							
1586.0	-69.27	2.63	27.30	-44.60	-40	-4.60	Horizontal
1586.0	-77.90	2.63	27.30	-53.23	-40	-13.23	Vertical
2379.0	-73.03	2.91	27.62	-48.32	-13	-35.32	Vertical
2379.0	-72.58	2.91	27.62	-47.87	-13	-34.87	Horizontal
197.4	-68.72	1.42	15.25	-54.90	-13	-41.90	Vertical
386.1	-70.43	1.36	17.19	-54.60	-13	-41.60	Horizontal
Test Results for High Channel 795.5MHz							
1591.0	-72.64	2.66	27.28	-48.02	-40	-8.02	Horizontal
1591.0	-71.10	2.66	27.28	-46.48	-40	-6.48	Vertical
2386.5	-67.40	2.91	27.60	-42.71	-13	-29.71	Vertical
2386.5	-70.24	2.91	27.60	-45.55	-13	-32.55	Horizontal
189.0	-74.97	1.32	17.29	-59.00	-13	-46.00	Vertical
401.0	-74.79	1.72	16.89	-59.62	-13	-46.62	Horizontal

QPSK EIRP POWER FOR LTE BAND 14 (10MHZ BANDWIDTH)

Test Results for Channel 793MHz							
Frequency(MHz)	SG Level(dBm)	Cable Loss(dB)	Antenna Gain(dB)	Absolute Level(dBm)	Limit （dBm）	Margin(dBm)	Polarity
1586.0	-75.34	2.63	27.30	-50.67	-40	-10.67	Horizontal
1586.0	-76.49	2.63	27.30	-51.82	-40	-11.82	Vertical
2379.0	-72.30	2.91	27.62	-47.59	-13	-34.59	Vertical
2379.0	-68.67	2.91	27.62	-43.96	-13	-30.96	Horizontal
208.9	-67.97	1.35	16.91	-52.41	-13	-39.41	Vertical
317.0	-70.24	1.62	16.31	-55.55	-13	-42.55	Horizontal

Note: PMea(dBm)= Power(dBm)+ ARpl (dBm)

. Over Limit= : PMea(dBm)-Limit(dBm)

. Both QPSK and 16QAM has been tested, the worst case is QPSK mode, the report just reported the worst case.

9.8 LTE BAND 17

QPSK EIRP POWER FOR LTE BAND 17 (5MHZ BANDWIDTH)

Test Results for Low Channel 706.5MHz							
Frequency(MHz)	SG Level(dBm)	Cable Loss(dB)	Antenna Factor(dB)	Absolute Level(dBm)	Limit （dBm）	Margin(dBm)	Polarity
1413.0	-53.60	2.61	27.28	-28.93	-13	-15.93	Horizontal
1413.0	-47.12	2.61	27.28	-22.45	-13	-9.45	Vertical
2119.5	-53.04	2.87	27.59	-28.32	-13	-15.32	Vertical
2119.5	-53.51	2.87	27.59	-28.79	-13	-15.79	Horizontal
205.8	-44.07	1.71	16.15	-29.63	-13	-16.63	Vertical
395.2	-43.73	1.41	17.32	-27.82	-13	-14.82	Horizontal
Test Results For Mid Channel 710MHz							
1420.0	-50.27	2.62	27.30	-25.59	-13	-12.59	Horizontal
1420.0	-47.63	2.62	27.30	-22.95	-13	-9.95	Vertical
2130.0	-53.25	2.87	27.62	-28.50	-13	-15.50	Vertical
2130.0	-50.28	2.87	27.62	-25.53	-13	-12.53	Horizontal
179.9	-35.40	1.42	15.25	-21.58	-13	-8.58	Vertical
387.4	-38.19	1.36	17.19	-22.36	-13	-9.36	Horizontal
Test Results for High Channel 713.5MHz							
1427.0	-46.51	2.66	27.28	-21.89	-13	-8.89	Horizontal
1427.0	-44.73	2.66	27.28	-20.11	-13	-7.11	Vertical
2140.5	-50.87	2.88	27.60	-26.15	-13	-13.15	Vertical
2140.5	-52.79	2.88	27.60	-28.07	-13	-15.07	Horizontal
196.6	-42.60	1.32	17.29	-26.63	-13	-13.63	Vertical
264.9	-41.46	1.72	16.89	-26.29	-13	-13.29	Horizontal

QPSK EIRP POWER FOR LTE BAND 17 (10MHZ BANDWIDTH)

Test Results for Low Channel 709MHz							
Frequency(MHz)	SG Level(dBm)	Cable Loss(dB)	Antenna Factor(dB)	Absolute Level(dBm)	Limit （dBm）	Margin(dBm)	Polarity
1418.0	-44.66	2.62	27.30	-19.98	-13	-6.98	Horizontal
1418.0	-53.89	2.62	27.30	-29.21	-13	-16.21	Vertical
2127.0	-53.59	2.87	27.62	-28.84	-13	-15.84	Vertical
2127.0	-52.88	2.87	27.62	-28.13	-13	-15.13	Horizontal
185.0	-43.07	1.35	16.91	-27.51	-13	-14.51	Vertical
269.3	-43.60	1.62	16.31	-28.91	-13	-15.91	Horizontal
Test Results for Mid Channel 710MHz							
1420.0	-51.16	2.62	27.30	-26.48	-13	-13.48	Horizontal
1420.0	-52.78	2.62	27.30	-28.10	-13	-15.10	Vertical
2130.0	-45.12	2.87	27.62	-20.37	-13	-7.37	Vertical
2130.0	-49.59	2.87	27.62	-24.84	-13	-11.84	Horizontal
211.1	-35.52	1.51	17.14	-19.89	-13	-6.89	Vertical
438.8	-36.55	1.77	16.88	-21.44	-13	-8.44	Horizontal
Test Results for High Channel 711MHz							
1422.0	-53.40	2.62	27.30	-28.72	-13	-15.72	Horizontal
1422.0	-44.76	2.62	27.30	-20.08	-13	-7.08	Vertical
2133.0	-49.38	2.87	27.62	-24.63	-13	-11.63	Vertical
2133.0	-52.36	2.87	27.62	-27.61	-13	-14.61	Horizontal
195.0	-43.16	1.78	15.95	-28.99	-13	-15.99	Vertical
446.9	-39.57	1.34	17.95	-22.97	-13	-9.97	Horizontal

Note: Spurious Emission Level = Spectrum Analyzer Read Value + Cable Loss+ Antenna Factor + 11.74

. Margin = Spurious Emission Level - Limit

. Both QPSK and 16QAM has been tested, the worst case is QPSK mode, the report just reported the worst case.

9.9 LTE BAND 25

QPSK EIRP POWER FOR LTE BAND 25 (1.4MHZ BANDWIDTH)

Test Results for Low Channel 1850.7MHz							
Frequency(MHz)	SG Level(dBm)	Cable Loss(dB)	Antenna Gain(dB)	Absolute Level(dBm)	Limit （dBm）	Margin(dBm)	Polarity
3701.4	-47.36	4.26	29.80	-21.82	-13	-8.82	Horizontal
3701.4	-44.31	4.26	29.80	-18.77	-13	-5.77	Vertical
5552.1	-51.08	5.36	35.84	-20.60	-13	-7.60	Vertical
5552.1	-51.45	5.36	35.84	-20.97	-13	-7.97	Horizontal
184.5	-38.16	1.68	16.04	-23.80	-13	-10.80	Vertical
315.5	-42.67	1.78	17.74	-26.71	-13	-13.71	Horizontal
Test Results for Mid Channel 1882.5MHz							
3765.0	-47.75	4.28	30.00	-22.03	-13	-9.03	Horizontal
3765.0	-53.17	4.28	30.00	-27.45	-13	-14.45	Vertical
5647.5	-49.93	5.41	35.86	-19.48	-13	-6.48	Vertical
5647.5	-53.03	5.41	35.86	-22.58	-13	-9.58	Horizontal
201.5	-42.52	1.72	17.69	-26.55	-13	-13.55	Vertical
332.4	-44.29	1.62	16.02	-29.88	-13	-16.88	Horizontal
Test Results for High Channel 1914.3MHz							
3828.6	-48.02	4.31	30.01	-22.32	-13	-9.32	Horizontal
3828.6	-52.92	4.31	30.01	-27.22	-13	-14.22	Vertical
5742.9	-50.75	5.43	35.86	-20.32	-13	-7.32	Vertical
5742.9	-50.43	5.43	35.86	-20.00	-13	-7.00	Horizontal
193.4	-39.31	1.80	16.69	-24.42	-13	-11.42	Vertical
467.2	-42.75	1.75	16.66	-27.85	-13	-14.85	Horizontal

QPSK EIRP POWER FOR LTE BAND 25 (20MHZ BANDWIDTH)

Test Results for Low Channel 1860MHz							
Frequency(MHz)	SG Level(dBm)	Cable Loss(dB)	Antenna Gain(dB)	Absolute Level(dBm)	Limit （dBm）	Margin(dBm)	Polarity
3720.0	-47.52	4.29	29.80	-22.01	-13	-9.01	Horizontal
3720.0	-50.95	4.29	29.80	-25.44	-13	-12.44	Vertical
5580.0	-45.43	5.38	35.84	-14.97	-13	-1.97	Vertical
5580.0	-52.37	5.38	35.84	-21.91	-13	-8.91	Horizontal
185.0	-34.47	1.57	17.26	-18.78	-13	-5.78	Vertical
438.7	-41.62	1.78	16.35	-27.05	-13	-14.05	Horizontal
Test Results for Mid Channel 1882.5MHz							
3765.0	-52.17	4.28	30.00	-26.45	-13	-13.45	Horizontal
3765.0	-48.55	4.28	30.00	-22.83	-13	-9.83	Vertical
5647.5	-47.31	5.41	35.86	-16.86	-13	-3.86	Vertical
5647.5	-49.61	5.41	35.86	-19.16	-13	-6.16	Horizontal
194.9	-41.88	1.44	17.95	-25.37	-13	-12.37	Vertical
357.9	-37.64	1.65	16.09	-23.20	-13	-10.20	Horizontal
Test Results for High Channel 1905MHz							
3810.0	-51.64	4.35	27.68	-28.31	-13	-15.31	Horizontal
3810.0	-46.16	4.35	27.68	-22.83	-13	-9.83	Vertical
5715.0	-49.21	5.42	35.86	-18.77	-13	-5.77	Vertical
5715.0	-50.14	5.42	35.86	-19.70	-13	-6.70	Horizontal
180.6	-38.74	1.61	16.85	-23.50	-13	-10.50	Vertical
324.0	-36.71	1.61	15.19	-23.13	-13	-10.13	Horizontal

9.10 LTE BAND 26A

QPSK EIRP POWER FOR LTE BAND 26A(814MHz~824MHz) (1.4MHZ BANDWIDTH)

Test Results for Low Channel 814.7MHz							
Frequency(MHz)	SG Level(dBm)	Cable Loss(dB)	Antenna Gain(dB)	Absolute Level(dBm)	Limit （dBm）	Margin(dBm)	Polarity
1629.4	-52.48	4.26	29.80	-26.94	-13	-13.94	Horizontal
1629.4	-48.98	4.26	29.80	-23.44	-13	-10.44	Vertical
2444.1	-45.59	5.36	35.84	-15.11	-13	-2.11	Vertical
2444.1	-52.66	5.36	35.84	-22.18	-13	-9.18	Horizontal
187.3	-40.74	1.68	16.04	-26.38	-13	-13.38	Vertical
329.3	-41.28	1.78	17.74	-25.32	-13	-12.32	Horizontal
Test Results For Mid Channel 819MHz							
1638.0	-51.22	4.28	30.00	-25.50	-13	-12.50	Horizontal
1638.0	-45.54	4.28	30.00	-19.82	-13	-6.82	Vertical
2457.0	-46.20	5.41	35.86	-15.75	-13	-2.75	Vertical
2457.0	-53.65	5.41	35.86	-23.20	-13	-10.20	Horizontal
191.6	-40.99	1.72	17.69	-25.02	-13	-12.02	Vertical
439.6	-41.76	1.62	16.02	-27.35	-13	-14.35	Horizontal
Test Results for High Channel 823.3MHz							
1646.6	-49.21	4.31	30.01	-23.51	-13	-10.51	Horizontal
1646.6	-52.95	4.31	30.01	-27.25	-13	-14.25	Vertical
2469.9	-52.58	5.43	35.86	-22.15	-13	-9.15	Vertical
2469.9	-52.29	5.43	35.86	-21.86	-13	-8.86	Horizontal
179.8	-36.46	1.80	16.69	-21.57	-13	-8.57	Vertical
417.8	-44.75	1.75	16.66	-29.85	-13	-16.85	Horizontal

QPSK EIRP POWER FOR LTE BAND 26A(814MHz~824MHz) (1.4MHZ BANDWIDTH)

Test Results for Channel 819MHz							
Frequency(MHz)	SG Level(dBm)	Cable Loss(dB)	Antenna Gain(dB)	Absolute Level(dBm)	Limit （dBm）	Margin(dBm)	Polarity
1638.0	-45.99	4.28	30.00	-20.27	-13	-7.27	Horizontal
1638.0	-46.82	4.28	30.00	-21.10	-13	-8.10	Vertical
2457.0	-47.50	5.41	35.86	-17.05	-13	-4.05	Vertical
2457.0	-50.76	5.41	35.86	-20.31	-13	-7.31	Horizontal
199.4	-39.06	1.44	17.95	-22.55	-13	-9.55	Vertical
272.8	-37.22	1.65	16.09	-22.78	-13	-9.78	Horizontal

9.11 LTE BAND 26B

QPSK EIRP POWER FOR LTE BAND 26B(824MHz~849MHz) (1.4MHZ BANDWIDTH)

Test Results for Low Channel 824.7MHz							
Frequency(MHz)	SG Level(dBm)	Cable Loss(dB)	Antenna Gain(dB)	Absolute Level(dBm)	Limit （dBm）	Margin(dBm)	Polarity
1649.4	-48.68	4.26	29.80	-23.14	-13	-10.14	Horizontal
1649.4	-53.43	4.26	29.80	-27.89	-13	-14.89	Vertical
2474.1	-53.71	5.36	35.84	-23.23	-13	-10.23	Vertical
2474.1	-49.43	5.36	35.84	-18.95	-13	-5.95	Horizontal
176.7	-35.91	1.68	16.04	-21.55	-13	-8.55	Vertical
362.4	-37.14	1.78	17.74	-21.18	-13	-8.18	Horizontal
Test Results For Mid Channel 836.5MHz							
1673.0	-46.06	4.28	30.00	-20.34	-13	-7.34	Horizontal
1673.0	-48.72	4.28	30.00	-23.00	-13	-10.00	Vertical
2509.5	-47.43	5.41	35.86	-16.98	-13	-3.98	Vertical
2509.5	-50.36	5.41	35.86	-19.91	-13	-6.91	Horizontal
195.7	-38.07	1.72	17.69	-22.10	-13	-9.10	Vertical
325.9	-40.07	1.62	16.02	-25.66	-13	-12.66	Horizontal
Test Results for High Channel 848.3MHz							
1696.6	-45.36	4.31	30.01	-19.66	-13	-6.66	Horizontal
1696.6	-52.26	4.31	30.01	-26.56	-13	-13.56	Vertical
2544.9	-47.35	5.43	35.86	-16.92	-13	-3.92	Vertical
2544.9	-53.33	5.43	35.86	-22.90	-13	-9.90	Horizontal
202.3	-42.35	1.80	16.69	-27.46	-13	-14.46	Vertical
244.0	-35.29	1.75	16.66	-20.39	-13	-7.39	Horizontal

QPSK EIRP POWER FOR LTE BAND 26B(824MHz~849MHz) (15MHZ BANDWIDTH)

Test Results for Low Channel 831.5MHz							
Frequency(MHz)	SG Level(dBm)	Cable Loss(dB)	Antenna Gain(dB)	Absolute Level(dBm)	Limit （dBm）	Margin(dBm)	Polarity
1663.0	-53.47	4.29	29.80	-27.96	-13	-14.96	Horizontal
1663.0	-53.43	4.29	29.80	-27.92	-13	-14.92	Vertical
2494.5	-45.20	5.38	35.84	-14.74	-13	-1.74	Vertical
2494.5	-52.19	5.38	35.84	-21.73	-13	-8.73	Horizontal
210.5	-36.07	1.57	17.26	-20.38	-13	-7.38	Vertical
466.0	-35.12	1.78	16.35	-20.55	-13	-7.55	Horizontal
Test Results for Mid Channel 836.5MHz							
1673.0	-46.67	4.28	30.00	-20.95	-13	-7.95	Horizontal
1673.0	-48.51	4.28	30.00	-22.79	-13	-9.79	Vertical
2509.5	-53.79	5.41	35.86	-23.34	-13	-10.34	Vertical
2509.5	-53.81	5.41	35.86	-23.36	-13	-10.36	Horizontal
178.7	-38.97	1.44	17.95	-22.46	-13	-9.46	Vertical
451.8	-44.43	1.65	16.09	-29.99	-13	-16.99	Horizontal
Test Results for High Channel841.5MHz							
1683.0	-48.46	4.35	27.68	-25.13	-13	-12.13	Horizontal
1683.0	-49.84	4.35	27.68	-26.51	-13	-13.51	Vertical
2524.5	-48.66	5.42	35.86	-18.22	-13	-5.22	Vertical
2524.5	-52.47	5.42	35.86	-22.03	-13	-9.03	Horizontal
210.6	-44.92	1.61	16.85	-29.68	-13	-16.68	Vertical
392.6	-36.68	1.61	15.19	-23.10	-13	-10.10	Horizontal

9.12 LTE BAND 38

QPSK EIRP POWER FOR LTE BAND 38 (5MHZ BANDWIDTH)

Test Results for Low Channel 2572.5MHz							
Frequency(MHz)	SG Level(dBm)	Cable Loss(dB)	Antenna Gain(dB)	Absolute Level(dBm)	Limit （dBm）	Margin(dBm)	Polarity
5145.0	-60.57	5.13	35.81	-29.89	-25	-4.89	Horizontal
5145.0	-61.38	5.13	35.81	-30.70	-25	-5.70	Vertical
7717.5	-62.03	5.42	36.85	-30.60	-25	-5.60	Vertical
7717.5	-64.13	5.42	36.85	-32.70	-25	-7.70	Horizontal
212.1	-44.89	1.56	17.97	-28.48	-25	-3.48	Vertical
375.8	-53.64	1.33	15.11	-39.86	-25	-14.86	Horizontal
Test Results For Mid Channel 2595MHz							
5190.0	-61.22	5.16	35.82	-30.56	-25	-5.56	Horizontal
5190.0	-60.07	5.16	35.82	-29.41	-25	-4.41	Vertical
7785.0	-64.52	5.53	36.85	-33.20	-25	-8.20	Vertical
7785.0	-62.89	5.53	36.85	-31.57	-25	-6.57	Horizontal
202.5	-53.73	1.77	16.17	-39.32	-25	-14.32	Vertical
422.0	-53.23	1.63	15.21	-39.65	-25	-14.65	Horizontal
Test Results for High Channel 2617.5MHz							
5235.0	-59.52	5.23	35.83	-28.92	-25	-3.92	Horizontal
5235.0	-64.61	5.23	35.83	-34.01	-25	-9.01	Vertical
7852.5	-62.57	5.62	36.87	-31.32	-25	-6.32	Vertical
7852.5	-62.88	5.62	36.87	-31.63	-25	-6.63	Horizontal
184.6	-46.52	1.58	17.56	-30.54	-25	-5.54	Vertical
329.0	-51.41	1.45	16.58	-36.28	-25	-11.28	Horizontal

QPSK EIRP POWER FOR LTE BAND 38 (20MHZ BANDWIDTH)

Test Results for Low Channel 2580MHz							
Frequency(MHz)	SG Level(dBm)	Cable Loss(dB)	Antenna Gain(dB)	Absolute Level(dBm)	Limit （dBm）	Margin(dBm)	Polarity
5160.0	-63.92	5.23	35.82	-33.33	-25	-8.33	Horizontal
5160.0	-59.16	5.23	35.82	-28.57	-25	-3.57	Vertical
7740.0	-64.94	5.67	36.86	-33.75	-25	-8.75	Vertical
7740.0	-60.91	5.67	36.86	-29.72	-25	-4.72	Horizontal
192.7	-51.76	1.55	15.76	-37.55	-25	-12.55	Vertical
361.5	-44.36	1.62	15.44	-30.54	-25	-5.54	Horizontal
Test Results for Mid Channel 2595MHz							
5190.0	-63.41	5.16	35.82	-32.75	-25	-7.75	Horizontal
5190.0	-60.78	5.16	35.82	-30.12	-25	-5.12	Vertical
7785.0	-61.17	5.53	36.85	-29.85	-25	-4.85	Vertical
7785.0	-61.82	5.53	36.85	-30.50	-25	-5.50	Horizontal
194.9	-49.89	1.58	16.84	-34.63	-25	-9.63	Vertical
234.6	-52.58	1.61	17.64	-36.55	-25	-11.55	Horizontal
Test Results for High Channel 2610MHz							
5220.0	-60.15	5.24	35.83	-29.56	-25	-4.56	Horizontal
5220.0	-60.77	5.24	35.83	-30.18	-25	-5.18	Vertical
7830.0	-61.90	5.70	36.88	-30.72	-25	-5.72	Vertical
7830.0	-59.33	5.70	36.88	-28.15	-25	-3.15	Horizontal
204.9	-47.84	1.48	16.84	-32.48	-25	-7.48	Vertical
243.4	-47.03	1.59	17.64	-30.98	-25	-5.98	Horizontal

9.13 LTE BAND 41

QPSK EIRP POWER FOR LTE BAND 41 (5MHZ BANDWIDTH)

Test Results for Low Channel 2498.5MHz							
Frequency(MHz)	SG Level(dBm)	Cable Loss(dB)	Antenna Gain(dB)	Absolute Level(dBm)	Limit （dBm）	Margin(dBm)	Polarity
4997.0	-59.35	5.13	35.81	-28.67	-25	-3.67	Horizontal
4997.0	-59.19	5.13	35.81	-28.51	-25	-3.51	Vertical
7495.5	-61.52	5.42	36.85	-30.09	-25	-5.09	Vertical
7495.5	-62.96	5.42	36.85	-31.53	-25	-6.53	Horizontal
190.4	-45.05	1.56	17.97	-28.64	-25	-3.64	Vertical
272.8	-52.55	1.33	15.11	-38.77	-25	-13.77	Horizontal
Test Results for Mid Channel 2593MHz							
5186.0	-60.98	5.16	35.82	-30.32	-25	-5.32	Horizontal
5186.0	-60.66	5.16	35.82	-30.00	-25	-5.00	Vertical
7779.0	-60.14	5.53	36.85	-28.82	-25	-3.82	Vertical
7779.0	-60.07	5.53	36.85	-28.75	-25	-3.75	Horizontal
179.6	-50.00	1.77	16.17	-35.59	-25	-10.59	Vertical
423.2	-44.13	1.63	15.21	-30.55	-25	-5.55	Horizontal
Test Results for High Channel 2687.5MHz							
5375.0	-62.31	5.23	35.83	-31.71	-25	-6.71	Horizontal
5375.0	-61.65	5.23	35.83	-31.05	-25	-6.05	Vertical
8062.5	-60.12	5.62	36.87	-28.87	-25	-3.87	Vertical
8062.5	-63.71	5.62	36.87	-32.46	-25	-7.46	Horizontal
176.8	-49.84	1.58	17.56	-33.86	-25	-8.86	Vertical
361.4	-45.22	1.45	16.58	-30.09	-25	-5.09	Horizontal

QPSK EIRP POWER FOR LTE BAND 41 (20MHZ BANDWIDTH)

Test Results for Low Channel 2506MHz							
Frequency(MHz)	SG Level(dBm)	Cable Loss(dB)	Antenna Gain(dB)	Absolute Level(dBm)	Limit （dBm）	Margin(dBm)	Polarity
5012.0	-63.05	5.23	35.82	-32.46	-25	-7.46	Horizontal
5012.0	-62.68	5.23	35.82	-32.09	-25	-7.09	Vertical
7518.0	-63.10	5.67	36.86	-31.91	-25	-6.91	Vertical
7518.0	-62.04	5.67	36.86	-30.85	-25	-5.85	Horizontal
184.0	-47.02	1.55	15.76	-32.81	-25	-7.81	Vertical
430.4	-45.10	1.62	15.44	-31.28	-25	-6.28	Horizontal
Test Results for Mid Channel 2593MHz							
5186.0	-59.47	5.16	35.82	-28.81	-25	-3.81	Horizontal
5186.0	-61.06	5.16	35.82	-30.40	-25	-5.40	Vertical
7779.0	-60.77	5.53	36.85	-29.45	-25	-4.45	Vertical
7779.0	-62.21	5.53	36.85	-30.89	-25	-5.89	Horizontal
179.2	-48.95	1.58	16.84	-33.69	-25	-8.69	Vertical
247.5	-50.54	1.61	17.64	-34.51	-25	-9.51	Horizontal
Test Results for High Channel 2680MHz							
5360.0	-61.93	5.24	35.83	-31.34	-25	-6.34	Horizontal
5360.0	-64.96	5.24	35.83	-34.37	-25	-9.37	Vertical
8040.0	-62.69	5.70	36.88	-31.51	-25	-6.51	Vertical
8040.0	-63.12	5.70	36.88	-31.94	-25	-6.94	Horizontal
203.6	-49.76	1.48	16.84	-34.40	-25	-9.40	Vertical
327.6	-49.83	1.59	17.64	-33.78	-25	-8.78	Horizontal

9.14 LTE BAND 66

QPSK EIRP POWER FOR LTE BAND 66 (1.4MHZ BANDWIDTH)

Test Results for Low Channel 1710.7MHz							
Frequency(MHz)	SG Level(dBm)	Cable Loss(dB)	Antenna Gain(dB)	Absolute Level(dBm)	Limit （dBm）	Margin(dBm)	Polarity
3421.4	-61.11	3.84	35.81	-29.14	-13	-16.14	Horizontal
3421.4	-63.43	3.84	35.81	-31.46	-13	-18.46	Vertical
5132.1	-63.87	5.18	36.85	-32.20	-13	-19.20	Vertical
5132.1	-59.08	5.18	36.85	-27.41	-13	-14.41	Horizontal
203.5	-45.77	1.56	17.97	-29.36	-13	-16.36	Vertical
331.1	-44.81	1.33	15.11	-31.03	-13	-18.03	Horizontal
Test Results for Mid Channel 1745MHz							
3490.0	-59.00	3.85	35.82	-27.03	-13	-14.03	Horizontal
3490.0	-63.92	3.85	35.82	-31.95	-13	-18.95	Vertical
5235.0	-60.18	5.21	36.85	-28.54	-13	-15.54	Vertical
5235.0	-64.79	5.21	36.85	-33.15	-13	-20.15	Horizontal
196.0	-46.10	1.77	16.17	-31.69	-13	-18.69	Vertical
462.5	-44.91	1.63	15.21	-31.33	-13	-18.33	Horizontal
Test Results for High Channel 1779.3MHz							
3558.6	-60.63	3.86	35.83	-28.66	-13	-15.66	Horizontal
3558.6	-59.85	3.86	35.83	-27.88	-13	-14.88	Vertical
5337.9	-60.38	5.24	36.87	-28.75	-13	-15.75	Vertical
5337.9	-59.28	5.24	36.87	-27.65	-13	-14.65	Horizontal
183.6	-46.55	1.58	17.56	-30.57	-13	-17.57	Vertical
419.9	-47.94	1.45	16.58	-32.81	-13	-19.81	Horizontal

QPSK EIRP POWER FOR LTE BAND 66 (20MHZ BANDWIDTH)

Test Results for Low Channel 1720MHz							
Frequency(MHz)	SG Level(dBm)	Cable Loss(dB)	Antenna Gain(dB)	Absolute Level(dBm)	Limit （dBm）	Margin(dBm)	Polarity
3440.0	-63.08	3.84	35.82	-31.10	-13	-18.10	Horizontal
3440.0	-62.38	3.84	35.82	-30.40	-13	-17.40	Vertical
5160.0	-59.55	5.18	36.86	-27.87	-13	-14.87	Vertical
5160.0	-60.81	5.18	36.86	-29.13	-13	-16.13	Horizontal
181.2	-47.01	1.56	15.76	-32.81	-13	-19.81	Vertical
417.0	-49.77	1.33	15.44	-35.66	-13	-22.66	Horizontal
Test Results for Mid Channel 1745MHz							
3490.0	-60.79	3.85	35.82	-28.82	-13	-15.82	Horizontal
3490.0	-62.62	3.85	35.82	-30.65	-13	-17.65	Vertical
5235.0	-63.13	5.21	36.85	-31.49	-13	-18.49	Vertical
5235.0	-63.48	5.21	36.85	-31.84	-13	-18.84	Horizontal
187.3	-48.33	1.77	16.84	-33.25	-13	-20.25	Vertical
366.2	-44.12	1.63	17.64	-28.11	-13	-15.11	Horizontal
Test Results for High Channel 1770MHz							
3540.0	-60.97	3.86	35.83	-29.00	-13	-16.00	Horizontal
3540.0	-59.88	3.86	35.83	-27.91	-13	-14.91	Vertical
5310.0	-63.79	5.24	36.88	-32.15	-13	-19.15	Vertical
5310.0	-61.31	5.24	36.88	-29.67	-13	-16.67	Horizontal
185.7	-44.81	1.58	16.84	-29.54	-13	-16.54	Vertical
444.8	-45.89	1.45	17.64	-29.70	-13	-16.70	Horizontal

Note: PMea(dBm)= Power(dBm)+ ARpl (dBm)

. Over Limit= : PMea(dBm)-Limit(dBm)

. We test both H direction and V direction, recorded worst case direction.

Both QPSK and 16QAM has been tested, the worst case is QPSK mode, the report just reported the worst case.

9.15 LTE BAND 71

QPSK EIRP POWER FOR LTE BAND 71 (5MHZ BANDWIDTH)

Test Results for Low Channel 665.5MHz							
Frequency(MHz)	SG Level(dBm)	Cable Loss(dB)	Antenna Gain(dB)	Absolute Level(dBm)	Limit （dBm）	Margin(dBm)	Polarity
1331.0	-62.72	2.16	35.81	-29.07	-13	-16.07	Horizontal
1331.0	-64.99	2.16	35.81	-31.34	-13	-18.34	Vertical
1996.5	-63.35	2.89	36.85	-29.39	-13	-16.39	Vertical
1996.5	-60.13	2.89	36.85	-26.17	-13	-13.17	Horizontal
181.1	-46.85	1.56	17.97	-30.44	-13	-17.44	Vertical
462.1	-52.47	1.33	15.11	-38.69	-13	-25.69	Horizontal
Test Results for Mid Channel 680.5MHz							
1361.0	-63.48	2.17	35.82	-29.83	-13	-16.83	Horizontal
1361.0	-62.99	2.17	35.82	-29.34	-13	-16.34	Vertical
2041.5	-63.91	2.90	36.85	-29.96	-13	-16.96	Vertical
2041.5	-64.72	2.90	36.85	-30.77	-13	-17.77	Horizontal
208.6	-50.04	1.77	16.17	-35.63	-13	-22.63	Vertical
431.2	-48.05	1.63	15.21	-34.47	-13	-21.47	Horizontal
Test Results for High Channel 695.5MHz							
1391.0	-61.99	2.19	35.83	-28.35	-13	-15.35	Horizontal
1391.0	-63.49	2.19	35.83	-29.85	-13	-16.85	Vertical
2086.5	-60.99	2.95	36.87	-27.07	-13	-14.07	Vertical
2086.5	-62.42	2.95	36.87	-28.50	-13	-15.50	Horizontal
205.7	-51.66	1.58	17.56	-35.68	-13	-22.68	Vertical
451.0	-52.48	1.45	16.58	-37.35	-13	-24.35	Horizontal

QPSK EIRP POWER FOR LTE BAND 71 (20MHZ BANDWIDTH)

Test Results for Low Channel 673MHz							
Frequency(MHz)	SG Level(dBm)	Cable Loss(dB)	Antenna Gain(dB)	Absolute Level(dBm)	Limit （dBm）	Margin(dBm)	Polarity
1346.0	-62.11	2.16	35.82	-28.45	-13	-15.45	Horizontal
1346.0	-64.78	2.16	35.82	-31.12	-13	-18.12	Vertical
2019.0	-59.58	2.89	36.86	-25.61	-13	-12.61	Vertical
2019.0	-61.06	2.89	36.86	-27.09	-13	-14.09	Horizontal
204.9	-51.63	1.56	15.76	-37.43	-13	-24.43	Vertical
403.7	-46.33	1.33	15.44	-32.22	-13	-19.22	Horizontal
Test Results for Mid Channel 683MHz							
1366.0	-62.79	2.17	35.82	-29.14	-13	-16.14	Horizontal
1366.0	-61.51	2.17	35.82	-27.86	-13	-14.86	Vertical
2049.0	-64.27	2.90	36.85	-30.32	-13	-17.32	Vertical
2049.0	-61.31	2.90	36.85	-27.36	-13	-14.36	Horizontal
206.9	-49.13	1.77	16.84	-34.05	-13	-21.05	Vertical
388.1	-54.30	1.63	17.64	-38.29	-13	-25.29	Horizontal
Test Results for High Channel 688MHz							
1376.0	-59.37	2.19	35.83	-25.73	-13	-12.73	Horizontal
1376.0	-59.49	2.19	35.83	-25.85	-13	-12.85	Vertical
2064.0	-62.06	2.95	36.88	-28.13	-13	-15.13	Vertical
2064.0	-59.91	2.95	36.88	-25.98	-13	-12.98	Horizontal
177.9	-48.52	1.58	16.84	-33.25	-13	-20.25	Vertical
342.8	-47.32	1.45	17.64	-31.13	-13	-18.13	Horizontal

Note: PMea(dBm)= Power(dBm)+ ARpl (dBm)

. Over Limit= : PMea(dBm)-Limit(dBm)

. We test both H direction and V direction, recorded worst case direction.

Both QPSK and 16QAM has been tested, the worst case is QPSK mode, the report just reported the worst case.

10. FREQUENCY STABILITY

RULE PART(S)

FCC: §2.1055, §22.355, §24.235, §27.54, §90.213

LIMITS

§22.355 - The carrier frequency shall not depart from the reference frequency in excess of ±2.5 ppm for mobile stations.

§24.235 - The frequency stability shall be sufficient to ensure that the fundamental emission stays within the authorized frequency block.

TEST PROCEDURE

Use CMW 500 with Frequency Error measurement capability.

- Temp. = −30° to +50°C
- Voltage =low voltage, DC 3.5V, Normal, DC 4.0V and High voltage, DC 4.4V.

Frequency Stability vs Temperature:

The EUT is place inside a temperature chamber. The temperature is set to -30ºC and allowed to stabilize. After sufficient soak time, the transmitting frequency error is measured. The temperature is increased by 10 degrees, allowed to stabilize and soak, and then the measurement is repeated. This is repeated until +50ºC is reached.

Frequency Stability vs Voltage:

The peak frequency error is recorded (worst-case).

MODES TESTED

LTE Band 2/4/5/7/12/13/14/17/25/26/38/41/66/71

RESULTS

See the following pages.

10.1 LTE BAND 2

Band 2 QPSK, (20MHz BANDWIDTH RB size 100 RB Offset 0)

Frequency error vs. Voltage

Voltage [Vdc]	Frequency [MHz]	Frequency* Error[Hz]	Frequency Error[ppm]	Limit [ppm]
3.5	1880	12.9	0.006850	2.5
4.0	1880	13.5	0.007158	2.5
4.4	1880	13.6	0.007213	2.5

Frequency error vs. Temperature

Temperature [°C]	Frequency [MHz]	Frequency* Error[Hz]	Frequency Error[ppm]	Limit [ppm]
Normal (25C)	1880	13.0	0.006937	2.5
Extreme (50C)	1880	12.1	0.006419	2.5
Extreme (40C)	1880	13.5	0.007178	2.5
Extreme (30C)	1880	13.9	0.007415	2.5
Extreme (10C)	1880	14.3	0.007595	2.5
Extreme (0C)	1880	12.6	0.006686	2.5
Extreme (-10C)	1880	13.3	0.007090	2.5
Extreme (-20C)	1880	13.8	0.007342	2.5
Extreme (-30C)	1880	14.5	0.007690	2.5

Band 2 16QAM, (20MHz BANDWIDTH RB size 100 RB Offset 0)

Frequency error vs. Voltage

Voltage [Vdc]	Frequency [MHz]	Frequency* Error[Hz]	Frequency Error[ppm]	Limit [ppm]
3.5	1880	9.6	0.005108	2.5
4.0	1880	8.5	0.004506	2.5
4.4	1880	7.6	0.004065	2.5

Frequency error vs. Temperature

Temperature [°C]	Frequency [MHz]	Frequency* Error[Hz]	Frequency Error[ppm]	Limit [ppm]
Normal (25C)	1880	9.3	0.004952	2.5
Extreme (50C)	1880	9.2	0.004874	2.5
Extreme (40C)	1880	8.6	0.004567026	2.5
Extreme (30C)	1880	8.6	0.004552975	2.5
Extreme (10C)	1880	8.8	0.00467868	2.5
Extreme (0C)	1880	8.2	0.004357926	2.5
Extreme (-10C)	1880	9.0	0.004770719	2.5
Extreme (-20C)	1880	9.1	0.004813898	2.5
Extreme (-30C)	1880	8.5	0.004532478	2.5

***Note:** Frequency error measurements were made by using the build-in capability of the Wireless Communication Test Set.

10.2 LTE BAND 4

Band 4 QPSK, (20MHz BANDWIDTH RB size 100 RB Offset 0)

Frequency error vs. Voltage

Voltage [Vdc]	Frequency [MHz]	Frequency* Error[Hz]	Frequency Error[ppm]	Limit [ppm]
3.5	1732.5	8.4	0.004871	2.5
4.0	1732.5	9.0	0.005213	2.5
4.4	1732.5	8.5	0.004904	2.5

Frequency error vs. Temperature

Temperature [°C]	Frequency [MHz]	Frequency* Error[Hz]	Frequency Error[ppm]	Limit [ppm]
Normal (25C)	1732.5	8.3	0.004802	2.5
Extreme (50C)	1732.5	8.9	0.005121	2.5
Extreme (40C)	1732.5	7.8	0.004476	2.5
Extreme (30C)	1732.5	6.1	0.003518	2.5
Extreme (10C)	1732.5	6.7	0.003880	2.5
Extreme (0C)	1732.5	9.2	0.005287	2.5
Extreme (-10C)	1732.5	8.0	0.004637	2.5
Extreme (-20C)	1732.5	6.6	0.003816	2.5
Extreme (-30C)	1732.5	8.7	0.005009	2.5

Band 4 16QAM, (20MHz BANDWIDTH RB size 100 RB Offset 0)

Frequency error vs. Voltage

Voltage [Vdc]	Frequency [MHz]	Frequency* Error[Hz]	Frequency Error[ppm]	Limit [ppm]
3.5	1732.5	9.5	0.005509	2.5
4.0	1732.5	8.7	0.005047	2.5
4.4	1732.5	8.4	0.004836	2.5

Frequency error vs. Temperature

Temperature [°C]	Frequency [MHz]	Frequency* Error[Hz]	Frequency Error[ppm]	Limit [ppm]
Normal (25C)	1732.5	9.7	0.005581	2.5
Extreme (50C)	1732.5	8.7	0.005000	2.5
Extreme (40C)	1732.5	7.9	0.004531	2.5
Extreme (30C)	1732.5	9.2	0.005283	2.5
Extreme (10C)	1732.5	9.0	0.005221	2.5
Extreme (0C)	1732.5	7.8	0.004524	2.5
Extreme (-10C)	1732.5	8.7	0.005027	2.5
Extreme (-20C)	1732.5	9.1	0.005249	2.5
Extreme (-30C)	1732.5	7.8	0.004521	2.5

***Note:** Frequency error measurements were made by using the build-in capability of the Wireless Communication Test Set.

10.3 LTE BAND 5

Band 5 QPSK, (10MHz BANDWIDTH RB size 50 RB Offset 0)

Frequency error vs. Voltage

Voltage [Vdc]	Frequency [MHz]	Frequency* Error[Hz]	Frequency Error[ppm]	Limit [ppm]
3.5	836.5	5.6	0.006717	2.5
4.0	836.5	6.6	0.007856	2.5
4.4	836.5	4.6	0.005549	2.5

Frequency error vs. Temperature

Temperature [°C]	Frequency [MHz]	Frequency* Error[Hz]	Frequency Error[ppm]	Limit [ppm]
Normal (25C)	836.5	6.4	0.007675	2.5
Extreme (50C)	836.5	5.5	0.006630	2.5
Extreme (40C)	836.5	6.2	0.007445	2.5
Extreme (30C)	836.5	6.8	0.008157	2.5
Extreme (10C)	836.5	5.4	0.006508	2.5
Extreme (0C)	836.5	5.4	0.006453	2.5
Extreme (-10C)	836.5	5.9	0.007015	2.5
Extreme (-20C)	836.5	6.3	0.007538	2.5
Extreme (-30C)	836.5	6.3	0.007477	2.5

Band 5 16QAM, (10MHz BANDWIDTH RB size 50 RB Offset 0)

Frequency error vs. Voltage

Voltage [Vdc]	Frequency [MHz]	Frequency* Error[Hz]	Frequency Error[ppm]	Limit [ppm]
3.5	836.5	5.4	0.006425	2.5
4.0	836.5	6.8	0.008132	2.5
4.4	836.5	4.7	0.005624	2.5

Frequency error vs. Temperature

Temperature [°C]	Frequency [MHz]	Frequency* Error[Hz]	Frequency Error[ppm]	Limit [ppm]
Normal (25C)	836.5	5.8	0.006895	2.5
Extreme (50C)	836.5	6.3	0.007590	2.5
Extreme (40C)	836.5	6.1	0.007296	2.5
Extreme (30C)	836.5	6.7	0.008008	2.5
Extreme (10C)	836.5	4.9	0.005898	2.5
Extreme (0C)	836.5	4.9	0.005841	2.5
Extreme (-10C)	836.5	5.6	0.006703	2.5
Extreme (-20C)	836.5	6.5	0.007780	2.5
Extreme (-30C)	836.5	6.2	0.007443	2.5

***Note:** Frequency error measurements were made by using the build-in capability of the Wireless Communication Test Set.

10.4 LTE BAND 7

Band 7 QPSK, (20MHz BANDWIDTH RB size 100 RB Offset 0)

Frequency error vs. Voltage

Voltage [Vdc]	Frequency [MHz]	Frequency* Error[Hz]	Frequency Error[ppm]	Limit [ppm]
3.5	2535	10.3	0.004082	2.5
4.0	2535	8.9	0.003492	2.5
4.4	2535	8.4	0.003295	2.5

Frequency error vs. Temperature

Temperature [°C]	Frequency [MHz]	Frequency* Error[Hz]	Frequency Error[ppm]	Limit [ppm]
Normal (25C)	2535	9.6	0.003800	2.5
Extreme (50C)	2535	8.8	0.003461	2.5
Extreme (40C)	2535	7.9	0.003123	2.5
Extreme (30C)	2535	8.5	0.003342	2.5
Extreme (10C)	2535	8.0	0.003138	2.5
Extreme (0C)	2535	8.4	0.003330	2.5
Extreme (-10C)	2535	9.9	0.003904	2.5
Extreme (-20C)	2535	8.8	0.003473	2.5
Extreme (-30C)	2535	8.5	0.003354	2.5

Band 7 16QAM, (20MHz BANDWIDTH RB size 100 RB Offset 0)

Frequency error vs. Voltage

Voltage [Vdc]	Frequency [MHz]	Frequency* Error[Hz]	Frequency Error[ppm]	Limit [ppm]
3.5	2535	6.9	0.002722	2.5
4.0	2535	6.7	0.002626	2.5
4.4	2535	5.6	0.002220	2.5

Frequency error vs. Temperature

Temperature [°C]	Frequency [MHz]	Frequency* Error[Hz]	Frequency Error[ppm]	Limit [ppm]
Normal (25C)	2535	6.9	0.002722	2.5
Extreme (50C)	2535	5.7	0.002236	2.5
Extreme (40C)	2535	5.8	0.002300	2.5
Extreme (30C)	2535	6.7	0.002636	2.5
Extreme (10C)	2535	6.2	0.002436	2.5
Extreme (0C)	2535	4.6	0.001833	2.5
Extreme (-10C)	2535	4.9	0.001949	2.5
Extreme (-20C)	2535	5.6	0.002198	2.5
Extreme (-30C)	2535	5.7	0.002251	2.5

***Note:** Frequency error measurements were made by using the build-in capability of the Wireless Communication Test Set.

10.5 LTE BAND 12

Band 12 QPSK, (10MHz BANDWIDTH RB size 50 RB Offset 0

Frequency error vs. Voltage

Voltage [Vdc]	Frequency [MHz]	Frequency* Error[Hz]	Frequency Error[ppm]	Limit [ppm]
3.5	707.5	8.6	0.012096	2.5
4.0	707.5	10.4	0.014747	2.5
4.4	707.5	9.0	0.012752	2.5

Frequency error vs. Temperature

Temperature [°C]	Frequency [MHz]	Frequency* Error[Hz]	Frequency Error[ppm]	Limit [ppm]
Normal (25C)	707.5	8.6	0.012092	2.5
Extreme (50C)	707.5	7.8	0.011012	2.5
Extreme (40C)	707.5	7.4	0.010402	2.5
Extreme (30C)	707.5	8.3	0.011700	2.5
Extreme (10C)	707.5	7.4	0.010465	2.5
Extreme (0C)	707.5	8.5	0.012038	2.5
Extreme (-10C)	707.5	7.9	0.011224	2.5
Extreme (-20C)	707.5	8.6	0.012085	2.5
Extreme (-30C)	707.5	8.3	0.011663	2.5

Band 12 16QAM, (10MHz BANDWIDTH RB size 50 RB Offset 0)

Frequency error vs. Voltage

Voltage [Vdc]	Frequency [MHz]	Frequency* Error[Hz]	Frequency Error[ppm]	Limit [ppm]
3.5	707.5	7.1	0.009999	2.5
4.0	707.5	8.7	0.012254	2.5
4.4	707.5	7.0	0.009937	2.5

Frequency error vs. Temperature

Temperature [°C]	Frequency [MHz]	Frequency* Error[Hz]	Frequency Error[ppm]	Limit [ppm]
Normal (25C)	707.5	8.5	0.012044	2.5
Extreme (50C)	707.5	8.1	0.011514	2.5
Extreme (40C)	707.5	9.1	0.012921	2.5
Extreme (30C)	707.5	8.2	0.011630	2.5
Extreme (10C)	707.5	8.6	0.012112	2.5
Extreme (0C)	707.5	7.3	0.010264	2.5
Extreme (-10C)	707.5	7.3	0.010307	2.5
Extreme (-20C)	707.5	8.7	0.012367	2.5
Extreme (-30C)	707.5	8.0	0.011363	2.5

***Note:** Frequency error measurements were made by using the build-in capability of the Wireless Communication Test Set.

10.6 LTE BAND 13

Band 13 QPSK, (10MHz BANDWIDTH RB size 50 RB Offset 0)

Frequency error vs. Voltage

Voltage [Vdc]	Frequency [MHz]	Frequency* Error[Hz]	Frequency Error[ppm]	Limit [ppm]
3.5	782.0	12.4	0.015898	2.5
4.0	782.0	14.2	0.018186	2.5
4.4	782.0	13.7	0.017510	2.5

Frequency error vs. Temperature

Temperature [°C]	Frequency [MHz]	Frequency* Error[Hz]	Frequency Error[ppm]	Limit [ppm]
Normal (25C)	782.0	13.8	0.017678	2.5
Extreme (50C)	782.0	13.8	0.017657	2.5
Extreme (40C)	782.0	15.0	0.019161	2.5
Extreme (30C)	782.0	14.2	0.018186	2.5
Extreme (10C)	782.0	13.9	0.017818	2.5
Extreme (0C)	782.0	14.5	0.018605	2.5
Extreme (-10C)	782.0	13.9	0.017721	2.5
Extreme (-20C)	782.0	14.2	0.018183	2.5
Extreme (-30C)	782.0	13.3	0.016999	2.5

Band 13 16QAM, (10MHz BANDWIDTH RB size 50 RB Offset 0)

Frequency error vs. Voltage

Voltage [Vdc]	Frequency [MHz]	Frequency* Error[Hz]	Frequency Error[ppm]	Limit [ppm]
3.5	782.0	12.4	0.015900	2.5
4.0	782.0	13.6	0.017434	2.5
4.4	782.0	12.9	0.016489	2.5

Frequency error vs. Temperature

Temperature [°C]	Frequency [MHz]	Frequency* Error[Hz]	Frequency Error[ppm]	Limit [ppm]
Normal (25C)	782.0	12.8	0.016355	2.5
Extreme (50C)	782.0	11.7	0.014937	2.5
Extreme (40C)	782.0	13.9	0.017755	2.5
Extreme (30C)	782.0	13.2	0.016864	2.5
Extreme (10C)	782.0	13.4	0.017161	2.5
Extreme (0C)	782.0	12.4	0.015836	2.5
Extreme (-10C)	782.0	12.9	0.016555	2.5
Extreme (-20C)	782.0	14.1	0.018039	2.5
Extreme (-30C)	782.0	14.5	0.018587	2.5

***Note:** Frequency error measurements were made by using the build-in capability of the Wireless Communication Test Set.

10.7 LTE BAND 14

Band 14 QPSK, (10MHz BANDWIDTH RB size 50 RB Offset 0)

Frequency error vs. Voltage

Voltage [Vdc]	Frequency [MHz]	Frequency* Error[Hz]	Frequency Error[ppm]	Limit [ppm]
3.5	793.0	12.4	0.015622	2.5
4.0	793.0	14.1	0.017810	2.5
4.4	793.0	13.4	0.016891	2.5

Frequency error vs. Temperature

Temperature [°C]	Frequency [MHz]	Frequency* Error[Hz]	Frequency Error[ppm]	Limit [ppm]
Normal (25C)	793.0	14.1	0.017758	2.5
Extreme (50C)	793.0	13.6	0.017103	2.5
Extreme (40C)	793.0	14.6	0.018457	2.5
Extreme (30C)	793.0	14.2	0.017955	2.5
Extreme (10C)	793.0	14.3	0.018094	2.5
Extreme (0C)	793.0	13.9	0.017515	2.5
Extreme (-10C)	793.0	13.8	0.017348	2.5
Extreme (-20C)	793.0	14.5	0.018296	2.5
Extreme (-30C)	793.0	13.7	0.017278	2.5

Band 14 16QAM, (10MHz BANDWIDTH RB size 50 RB Offset 0)

Frequency error vs. Voltage

Voltage [Vdc]	Frequency [MHz]	Frequency* Error[Hz]	Frequency Error[ppm]	Limit [ppm]
3.5	793.0	12.8	0.016113	2.5
4.0	793.0	14.3	0.017980	2.5
4.4	793.0	13.7	0.017332	2.5

Frequency error vs. Temperature

Temperature [°C]	Frequency [MHz]	Frequency* Error[Hz]	Frequency Error[ppm]	Limit [ppm]
Normal (25C)	793.0	12.8	0.016096	2.5
Extreme (50C)	793.0	11.5	0.014503	2.5
Extreme (40C)	793.0	13.4	0.016957	2.5
Extreme (30C)	793.0	13.2	0.016607	2.5
Extreme (10C)	793.0	13.8	0.017377	2.5
Extreme (0C)	793.0	11.8	0.014825	2.5
Extreme (-10C)	793.0	13.3	0.016724	2.5
Extreme (-20C)	793.0	13.8	0.017440	2.5
Extreme (-30C)	793.0	14.9	0.018808	2.5

***Note:** Frequency error measurements were made by using the build-in capability of the Wireless Communication Test Set.

10.8 LTE BAND 17

Band 17 QPSK, (10MHz BANDWIDTH RB size 50 RB Offset 0)

Frequency error vs. Voltage

Voltage [Vdc]	Frequency [MHz]	Frequency* Error[Hz]	Frequency Error[ppm]	Limit [ppm]
3.5	710.0	10.3	0.014465	2.5
4.0	710.0	8.9	0.012483	2.5
4.4	710.0	7.9	0.011119	2.5

Frequency error vs. Temperature

Temperature [°C]	Frequency [MHz]	Frequency* Error[Hz]	Frequency Error[ppm]	Limit [ppm]
Normal (25C)	710.0	9.5	0.013317	2.5
Extreme (50C)	710.0	9.2	0.012960	2.5
Extreme (40C)	710.0	8.0	0.011246	2.5
Extreme (30C)	710.0	9.4	0.013309	2.5
Extreme (10C)	710.0	9.0	0.012640	2.5
Extreme (0C)	710.0	8.0	0.011218	2.5
Extreme (-10C)	710.0	9.4	0.013268	2.5
Extreme (-20C)	710.0	8.5	0.011904	2.5
Extreme (-30C)	710.0	8.3	0.011686	2.5

Band 17 16QAM, (10MHz BANDWIDTH RB size 50 RB Offset 0)

Frequency error vs. Voltage

Voltage [Vdc]	Frequency [MHz]	Frequency* Error[Hz]	Frequency Error[ppm]	Limit [ppm]
3.5	710.0	9.7	0.013637	2.5
4.0	710.0	8.6	0.012082	2.5
4.4	710.0	8.8	0.012399	2.5

Frequency error vs. Temperature

Temperature [°C]	Frequency [MHz]	Frequency* Error[Hz]	Frequency Error[ppm]	Limit [ppm]
Normal (25C)	710.0	9.0	0.012624	2.5
Extreme (50C)	710.0	9.3	0.013032	2.5
Extreme (40C)	710.0	8.0	0.011218	2.5
Extreme (30C)	710.0	8.9	0.012535	2.5
Extreme (10C)	710.0	7.9	0.011121	2.5
Extreme (0C)	710.0	8.7	0.012189	2.5
Extreme (-10C)	710.0	9.1	0.012818	2.5
Extreme (-20C)	710.0	8.8	0.012362	2.5
Extreme (-30C)	710.0	8.1	0.011358	2.5

***Note:** Frequency error measurements were made by using the build-in capability of the Wireless Communication Test Set.

10.9 LTE BAND 25

Band 25 QPSK, (20MHz BANDWIDTH RB size 100 RB Offset 0)

Frequency error vs. Voltage

Voltage [Vdc]	Frequency [MHz]	Frequency* Error[Hz]	Frequency Error[ppm]	Limit [ppm]
3.5	1882.5	9.5	0.005022	2.5
4.0	1882.5	9.2	0.004889	2.5
4.4	1882.5	8.2	0.004346	2.5

Frequency error vs. Temperature

Temperature [°C]	Frequency [MHz]	Frequency* Error[Hz]	Frequency Error[ppm]	Limit [ppm]
Normal (25C)	1882.5	10.1	0.005342	2.5
Extreme (50C)	1882.5	8.9	0.004748	2.5
Extreme (40C)	1882.5	7.8	0.004127	2.5
Extreme (30C)	1882.5	9.1	0.004827	2.5
Extreme (10C)	1882.5	8.8	0.004674	2.5
Extreme (0C)	1882.5	8.0	0.004265	2.5
Extreme (-10C)	1882.5	8.9	0.004702	2.5
Extreme (-20C)	1882.5	8.6	0.004570	2.5
Extreme (-30C)	1882.5	8.2	0.004365	2.5

Band 25 16QAM, (20MHz BANDWIDTH RB size 100 RB Offset 0)

Frequency error vs. Voltage

Voltage [Vdc]	Frequency [MHz]	Frequency* Error[Hz]	Frequency Error[ppm]	Limit [ppm]
3.5	1882.5	9.9	0.005261	2.5
4.0	1882.5	8.9	0.004729	2.5
4.4	1882.5	8.3	0.004402	2.5

Frequency error vs. Temperature

Temperature [°C]	Frequency [MHz]	Frequency* Error[Hz]	Frequency Error[ppm]	Limit [ppm]
Normal (25C)	1882.5	9.6	0.005086	2.5
Extreme (50C)	1882.5	9.3	0.004935	2.5
Extreme (40C)	1882.5	8.8	0.004686	2.5
Extreme (30C)	1882.5	9.0	0.004796	2.5
Extreme (10C)	1882.5	8.2	0.004358	2.5
Extreme (0C)	1882.5	8.0	0.004224	2.5
Extreme (-10C)	1882.5	9.5	0.005021	2.5
Extreme (-20C)	1882.5	9.1	0.004812	2.5
Extreme (-30C)	1882.5	8.6	0.004573	2.5

***Note:** Frequency error measurements were made by using the build-in capability of the Wireless Communication Test Set.

10.10 LTE BAND 26A

Band 26A QPSK, (10MHz BANDWIDTH RB size 50 RB Offset 0)

Frequency error vs. Voltage

Voltage [Vdc]	Frequency [MHz]	Frequency* Error[Hz]	Frequency Error[ppm]	Limit [ppm]
3.5	819.0	9.4	0.011423	2.5
4.0	819.0	8.7	0.010604	2.5
4.4	819.0	7.9	0.009634	2.5

Frequency error vs. Temperature

Temperature [°C]	Frequency [MHz]	Frequency* Error[Hz]	Frequency Error[ppm]	Limit [ppm]
Normal (25C)	819.0	9.4	0.011538	2.5
Extreme (50C)	819.0	9.2	0.011256	2.5
Extreme (40C)	819.0	8.4	0.010203	2.5
Extreme (30C)	819.0	8.7	0.010590	2.5
Extreme (10C)	819.0	9.2	0.011199	2.5
Extreme (0C)	819.0	7.9	0.009673	2.5
Extreme (-10C)	819.0	9.4	0.011423	2.5
Extreme (-20C)	819.0	9.3	0.011374	2.5
Extreme (-30C)	819.0	8.1	0.009926	2.5

Band 26A 16QAM, (10MHz BANDWIDTH RB size 50 RB Offset 0)

Frequency error vs. Voltage

Voltage [Vdc]	Frequency [MHz]	Frequency* Error[Hz]	Frequency Error[ppm]	Limit [ppm]
3.5	819.0	10.2	0.012418	2.5
4.0	819.0	9.1	0.011156	2.5
4.4	819.0	8.9	0.010860	2.5

Frequency error vs. Temperature

Temperature [°C]	Frequency [MHz]	Frequency* Error[Hz]	Frequency Error[ppm]	Limit [ppm]
Normal (25C)	819.0	9.4	0.011501	2.5
Extreme (50C)	819.0	8.7	0.010662	2.5
Extreme (40C)	819.0	8.8	0.010762	2.5
Extreme (30C)	819.0	9.3	0.011387	2.5
Extreme (10C)	819.0	8.0	0.009807	2.5
Extreme (0C)	819.0	8.2	0.009973	2.5
Extreme (-10C)	819.0	9.1	0.011154	2.5
Extreme (-20C)	819.0	8.6	0.010558	2.5
Extreme (-30C)	819.0	8.6	0.010493	2.5

***Note:** Frequency error measurements were made by using the build-in capability of the Wireless Communication Test Set.

10.11 LTE BAND 26B

Band 26B QPSK, (15MHz BANDWIDTH RB size 75 RB Offset 0)

Frequency error vs. Voltage

Voltage [Vdc]	Frequency [MHz]	Frequency* Error[Hz]	Frequency Error[ppm]	Limit [ppm]
3.5	836.5	9.8	0.011728	2.5
4.0	836.5	8.8	0.010552	2.5
4.4	836.5	8.1	0.009644	2.5

Frequency error vs. Temperature

Temperature [°C]	Frequency [MHz]	Frequency* Error[Hz]	Frequency Error[ppm]	Limit [ppm]
Normal (25C)	836.5	9.4	0.011252	2.5
Extreme (50C)	836.5	9.3	0.011072	2.5
Extreme (40C)	836.5	8.5	0.010143	2.5
Extreme (30C)	836.5	9.0	0.010793	2.5
Extreme (10C)	836.5	9.3	0.011122	2.5
Extreme (0C)	836.5	8.5	0.010142	2.5
Extreme (-10C)	836.5	8.8	0.010513	2.5
Extreme (-20C)	836.5	9.3	0.011075	2.5
Extreme (-30C)	836.5	8.2	0.009793	2.5

Band 26B 16QAM, (15MHz BANDWIDTH RB size 75 RB Offset 0)

Frequency error vs. Voltage

Voltage [Vdc]	Frequency [MHz]	Frequency* Error[Hz]	Frequency Error[ppm]	Limit [ppm]
3.5	836.5	10.3	0.012367	2.5
4.0	836.5	8.8	0.010572	2.5
4.4	836.5	8.2	0.009826	2.5

Frequency error vs. Temperature

Temperature [°C]	Frequency [MHz]	Frequency* Error[Hz]	Frequency Error[ppm]	Limit [ppm]
Normal (25C)	836.5	8.9	0.010646	2.5
Extreme (50C)	836.5	8.8	0.010462	2.5
Extreme (40C)	836.5	8.0	0.009562	2.5
Extreme (30C)	836.5	9.4	0.011191	2.5
Extreme (10C)	836.5	7.7	0.009213	2.5
Extreme (0C)	836.5	8.5	0.010102	2.5
Extreme (-10C)	836.5	9.7	0.011537	2.5
Extreme (-20C)	836.5	8.6	0.010323	2.5
Extreme (-30C)	836.5	7.9	0.009446	2.5

***Note:** Frequency error measurements were made by using the build-in capability of the Wireless Communication

10.12 LTE BAND 38

Band 38 QPSK, (20MHz BANDWIDTH RB size 100 RB Offset 0)

Frequency error vs. Voltage

Voltage [Vdc]	Frequency [MHz]	Frequency* Error[Hz]	Frequency Error[ppm]	Limit [ppm]
3.5	2595	9.9	0.003832	2.5
4.0	2595	9.4	0.003609	2.5
4.4	2595	8.7	0.003334	2.5

Frequency error vs. Temperature

Temperature [°C]	Frequency [MHz]	Frequency* Error[Hz]	Frequency Error[ppm]	Limit [ppm]
Normal (25C)	2595	9.4	0.003607	2.5
Extreme (50C)	2595	8.5	0.003257	2.5
Extreme (40C)	2595	8.4	0.003255	2.5
Extreme (30C)	2595	9.3	0.003577	2.5
Extreme (10C)	2595	8.3	0.003186	2.5
Extreme (0C)	2595	8.7	0.003358	2.5
Extreme (-10C)	2595	9.8	0.003761	2.5
Extreme (-20C)	2595	8.4	0.003242	2.5
Extreme (-30C)	2595	8.8	0.003387	2.5

Band 38 16QAM, (15MHz BANDWIDTH RB size 100 RB Offset 0)

Frequency error vs. Voltage

Voltage [Vdc]	Frequency [MHz]	Frequency* Error[Hz]	Frequency Error[ppm]	Limit [ppm]
3.5	2595	6.9	0.002659	2.5
4.0	2595	6.2	0.002375	2.5
4.4	2595	5.8	0.002231	2.5

Frequency error vs. Temperature

Temperature [°C]	Frequency [MHz]	Frequency* Error[Hz]	Frequency Error[ppm]	Limit [ppm]
Normal (25C)	2595	6.9	0.002659	2.5
Extreme (50C)	2595	5.1	0.001974	2.5
Extreme (40C)	2595	5.1	0.001956	2.5
Extreme (30C)	2595	6.3	0.002444	2.5
Extreme (10C)	2595	5.9	0.002274	2.5
Extreme (0C)	2595	5.4	0.002062	2.5
Extreme (-10C)	2595	4.8	0.001832	2.5
Extreme (-20C)	2595	6.0	0.002315	2.5
Extreme (-30C)	2595	5.9	0.002292	2.5

***Note:** Frequency error measurements were made by using the build-in capability of the Wireless Communication

10.13 LTE BAND 41

Band 41 QPSK, (20MHz BANDWIDTH RB size 100 RB Offset 0)

Frequency error vs. Voltage

Voltage [Vdc]	Frequency [MHz]	Frequency* Error[Hz]	Frequency Error[ppm]	Limit [ppm]
3.5	2593	10.2	0.003916	2.5
4.0	2593	9.0	0.003478	2.5
4.4	2593	8.2	0.003166	2.5

Frequency error vs. Temperature

Temperature [°C]	Frequency [MHz]	Frequency* Error[Hz]	Frequency Error[ppm]	Limit [ppm]
Normal (25C)	2593	9.3	0.003585	2.5
Extreme (50C)	2593	8.9	0.003425	2.5
Extreme (40C)	2593	8.8	0.003402	2.5
Extreme (30C)	2593	8.5	0.003277	2.5
Extreme (10C)	2593	8.1	0.003116	2.5
Extreme (0C)	2593	8.6	0.003328	2.5
Extreme (-10C)	2593	9.0	0.003459	2.5
Extreme (-20C)	2593	8.9	0.003424	2.5
Extreme (-30C)	2593	8.6	0.003326	2.5

Band 41 16QAM, (20MHz BANDWIDTH RB size 100 RB Offset 0)

Frequency error vs. Voltage

Voltage [Vdc]	Frequency [MHz]	Frequency* Error[Hz]	Frequency Error[ppm]	Limit [ppm]
3.5	2593	6.9	0.002661	2.5
4.0	2593	6.6	0.002533	2.5
4.4	2593	5.6	0.002155	2.5

Frequency error vs. Temperature

Temperature [°C]	Frequency [MHz]	Frequency* Error[Hz]	Frequency Error[ppm]	Limit [ppm]
Normal (25C)	2593	6.9	0.002661	2.5
Extreme (50C)	2593	5.3	0.002056	2.5
Extreme (40C)	2593	5.3	0.002031	2.5
Extreme (30C)	2593	6.2	0.002403	2.5
Extreme (10C)	2593	5.3	0.002034	2.5
Extreme (0C)	2593	5.1	0.001981	2.5
Extreme (-10C)	2593	5.5	0.002130	2.5
Extreme (-20C)	2593	6.0	0.002328	2.5
Extreme (-30C)	2593	5.3	0.002030	2.5

***Note:** Frequency error measurements were made by using the build-in capability of the Wireless Communication Test Set.

10.14 LTE BAND 66

Band 66 QPSK, (20MHz BANDWIDTH RB size 100 RB Offset 0)

Frequency error vs. Voltage

Voltage [Vdc]	Frequency [MHz]	Frequency* Error[Hz]	Frequency Error[ppm]	Limit [ppm]
3.5	1745	6.5	0.003714	2.5
4.0	1745	7.0	0.004019	2.5
4.4	1745	7.8	0.004444	2.5

Frequency error vs. Temperature

Temperature [°C]	Frequency [MHz]	Frequency* Error[Hz]	Frequency Error[ppm]	Limit [ppm]
Normal (25C)	1745	5.1	0.002929	2.5
Extreme (50C)	1745	7.8	0.004464	2.5
Extreme (40C)	1745	6.6	0.003801	2.5
Extreme (30C)	1745	7.1	0.004041	2.5
Extreme (10C)	1745	7.7	0.004424	2.5
Extreme (0C)	1745	6.5	0.003708	2.5
Extreme (-10C)	1745	5.0	0.002880	2.5
Extreme (-20C)	1745	6.8	0.003873	2.5
Extreme (-30C)	1745	5.1	0.002917	2.5

Band 66 16QAM, (20MHz BANDWIDTH RB size 100 RB Offset 0)

Frequency error vs. Voltage

Voltage [Vdc]	Frequency [MHz]	Frequency* Error[Hz]	Frequency Error[ppm]	Limit [ppm]
3.5	1745	8.1	0.004663	2.5
4.0	1745	7.9	0.004551	2.5
4.4	1745	9.3	0.005338	2.5

Frequency error vs. Temperature

Temperature [°C]	Frequency [MHz]	Frequency* Error[Hz]	Frequency Error[ppm]	Limit [ppm]
Normal (25C)	1745	8.4	0.004791	2.5
Extreme (50C)	1745	8.0	0.004589	2.5
Extreme (40C)	1745	9.0	0.005142	2.5
Extreme (30C)	1745	8.5	0.004851	2.5
Extreme (10C)	1745	8.7	0.004973	2.5
Extreme (0C)	1745	6.6	0.003802	2.5
Extreme (-10C)	1745	8.4	0.004821	2.5
Extreme (-20C)	1745	8.4	0.004816	2.5
Extreme (-30C)	1745	5.4	0.003111	2.5

***Note:** Frequency error measurements were made by using the build-in capability of the Wireless Communication Test Set.

10.15 LTE BAND 71

Band 71 QPSK, (20MHz BANDWIDTH RB size 100 RB Offset 0)

Frequency error vs. Voltage

Voltage [Vdc]	Frequency [MHz]	Frequency* Error[Hz]	Frequency Error[ppm]	Limit [ppm]
3.5	1745	6.7	0.003832	2.5
4.0	1745	6.6	0.003759	2.5
4.4	1745	7.7	0.004412	2.5

Frequency error vs. Temperature

Temperature [°C]	Frequency [MHz]	Frequency* Error[Hz]	Frequency Error[ppm]	Limit [ppm]
Normal (25C)	1745	5.9	0.003392	2.5
Extreme (50C)	1745	7.6	0.004328	2.5
Extreme (40C)	1745	6.0	0.003452	2.5
Extreme (30C)	1745	7.3	0.004165	2.5
Extreme (10C)	1745	7.0	0.004015	2.5
Extreme (0C)	1745	6.7	0.003855	2.5
Extreme (-10C)	1745	5.7	0.003276	2.5
Extreme (-20C)	1745	7.0	0.003990	2.5
Extreme (-30C)	1745	6.0	0.003426	2.5

Band 71 16QAM, (20MHz BANDWIDTH RB size 100 RB Offset 0)

Frequency error vs. Voltage

Voltage [Vdc]	Frequency [MHz]	Frequency* Error[Hz]	Frequency Error[ppm]	Limit [ppm]
3.5	1745	8.6	0.004906	2.5
4.0	1745	7.8	0.004494	2.5
4.4	1745	10.0	0.005717	2.5

Frequency error vs. Temperature

Temperature [°C]	Frequency [MHz]	Frequency* Error[Hz]	Frequency Error[ppm]	Limit [ppm]
Normal (25C)	1745	8.9	0.005083	2.5
Extreme (50C)	1745	7.9	0.004550	2.5
Extreme (40C)	1745	8.0	0.004600	2.5
Extreme (30C)	1745	8.4	0.004839	2.5
Extreme (10C)	1745	8.5	0.004894	2.5
Extreme (0C)	1745	6.3	0.003600	2.5
Extreme (-10C)	1745	8.7	0.004959	2.5
Extreme (-20C)	1745	8.2	0.004722	2.5
Extreme (-30C)	1745	5.1	0.002934	2.5

***Note:** Frequency error measurements were made by using the build-in capability of the Wireless Communication Test Set.

11. Peak-to-Average Ratio

11.1 Description of the PAR Measurement

The peak-to-average ratio (PAR) of the transmission may not exceed 13 dB.

11.2 Measuring Instruments

See list of measuring instruments of this test report.

11.3 Test Procedures

1. The EUT was connected to Spectrum Analyzer and Base Station via power divider.
2. The RF output of EUT was connected to the spectrum analyzer by RF cable and attenuator. The path loss was compensated to the results for each measurement.
3. For LTE operating modes:
   a. Set the CCDF (Complementary Cumulative Distribution Function) option in spectrum analyzer.
   b. The highest RF powers were measured and recorded the maximum PAPR level associated with a probability of 0.1 %.

11.4 Test Setup

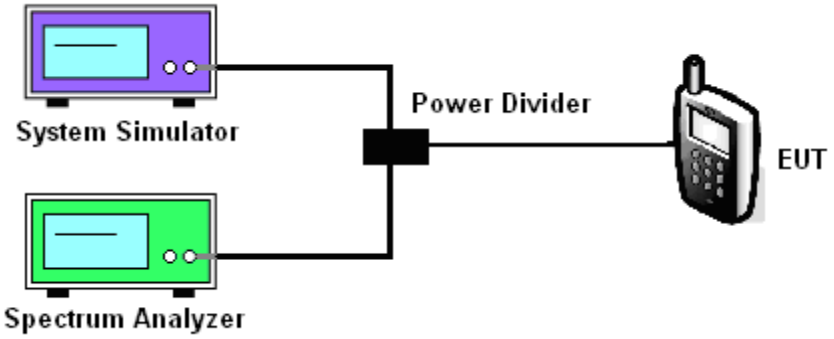

MODES TESTED

LTE Band 2/4/5/7/12/13/14/17/25/26/38/41/66/71

Test data reference attachment.

----END OF REPORT----