Zero Headband
Product overview and operation manual

O Overview

Zero Headband is a wearable device for measuring multiple biosignals. It is connected to a smartphone or tablet PC by wireless and can measure 4-channel EEG, 1-channel ECG, and 1-channel angular velocity using the dedicated APP.

O Signal processing module

Integrated signal processing board :

EEG module, ECG module, Gyroscope sensor

O Appearance

Overview

Device	Cradle 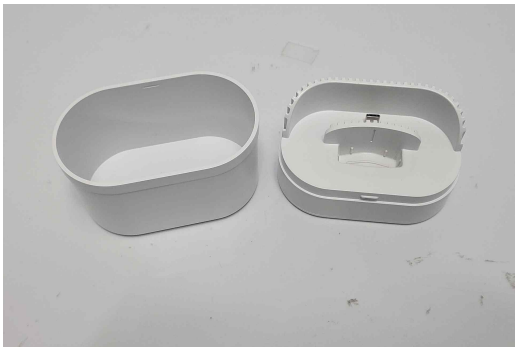
Internal board 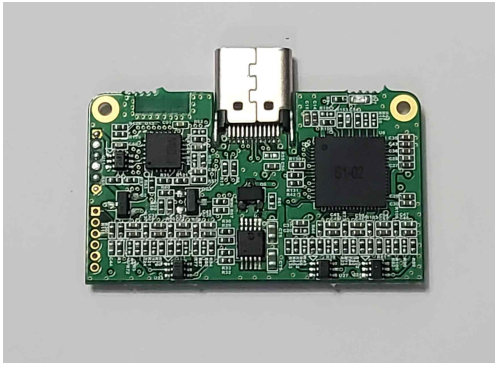 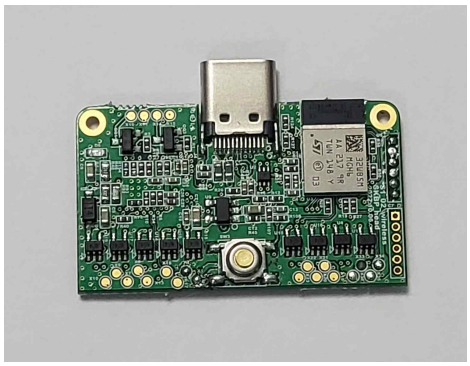	

O Specification

Charging Voltage and current		5Vdc 300mA
Operating Voltage		3.7Vdc
Operation Temp.		10 ~ 40℃
Frequency		2402 ~ 2480 MHz
Size	Device	Main : 77.6 * 44.7 * 10.7 mm Sensor : 35.3 * 16.8 * 12.2 mm cable : 200 mm
	Cradle	108 * 85.7 * 62 mm
Weight	Device	29.1 g
	Cradle	150 g

O Operation

1. Attach the electrode to the device.

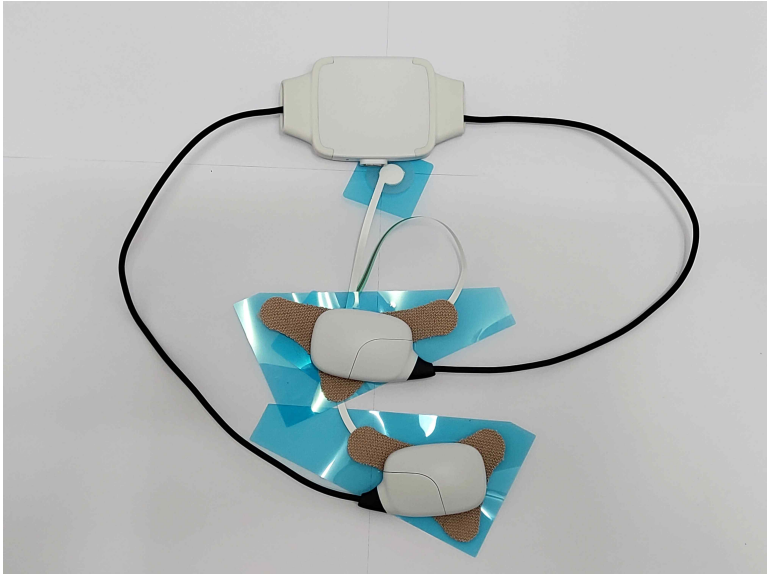

2. Long press the switch to turn on the device. If device turn on, the Blue LED on.

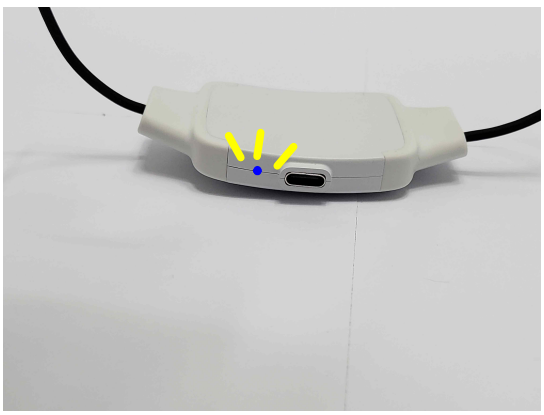

3. Open the ‘ST BLE Demo’ application on the smartphone.

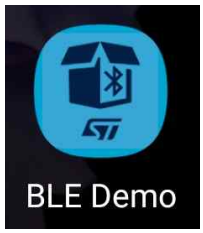

4. Select the ‘EEGS1V1’, and click ‘CONNECT’ button.

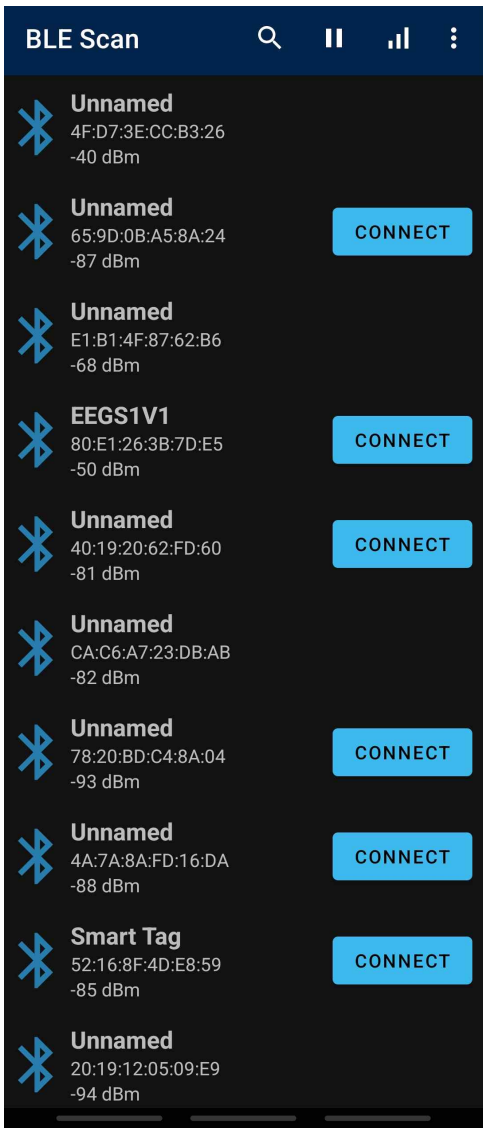

5. Slide the ‘P2P Notify’ slider, and the received data will display. If the application works properly, the characters are scrolled on the screen as shown below.

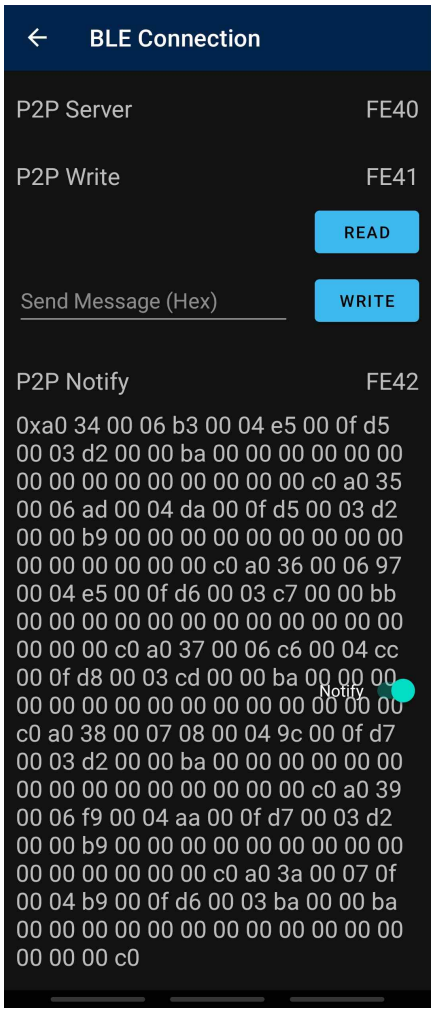

6. ※ Scrolling may be interrupted by temporary disconnection caused by external shock, but scrolling is restored soon, and this is a normal operation. ※

7. Exit the application for ending test.

O Architecture configuration

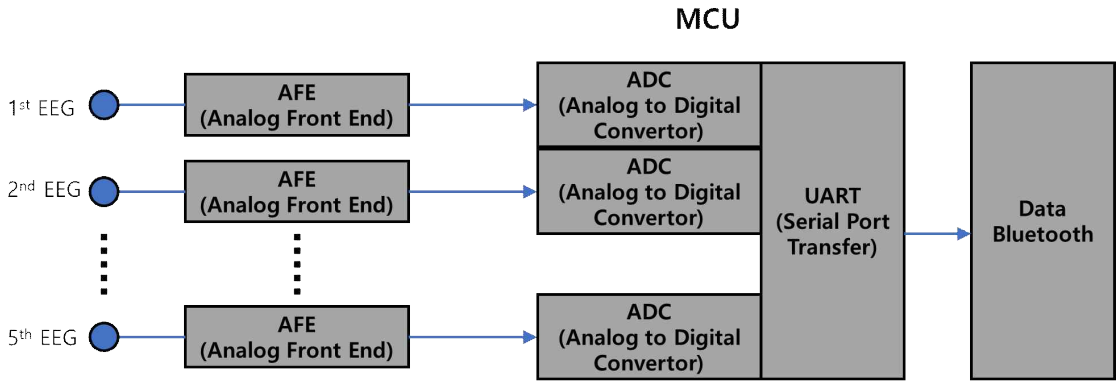

< HW >

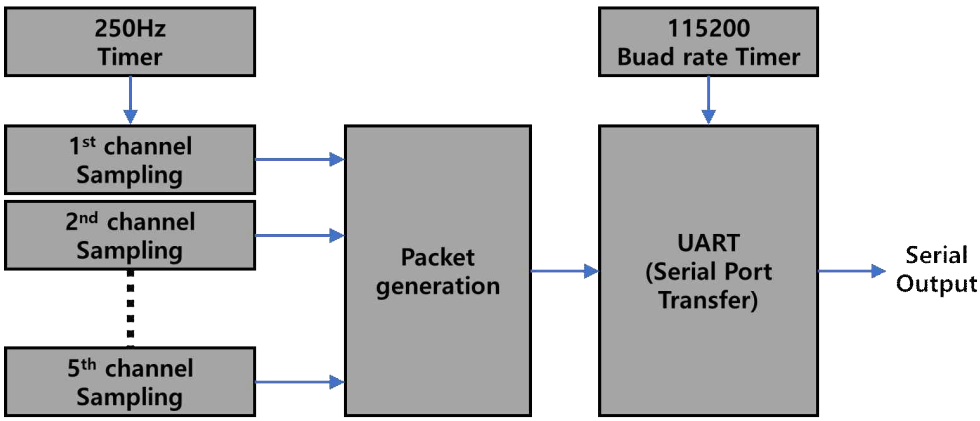

< SW >

FCC Compliance Statement

This device complies with part 15 of the FCC rules. Operation is subject to the following two conditions: (1) This device may not cause harmful interference, and (2) this device must accept any interference received, including interference that may cause undesired operation.

FCC Interference Statement

This equipment has been tested and found to comply with the limits for a Class B digital device, pursuant to part 15 of the FCC Rules. These limits are designed to provide reasonable protection against harmful interference in a residential installation. This equipment generates, uses and can radiate radio frequency energy and, if not installed and used in accordance with the instructions, may cause harmful interference to radio communications. However, there is no guarantee that interference will not occur in a particular installation. If this equipment does cause harmful interference to radio or television reception, which can be determined by turning the equipment off and on, the user is encouraged to correct the interference by one of the following measures:

Reorient or relocate the receiving antenna.
Increase the separation between the equipment and receiver.
Connect the equipment into an outlet on a circuit different from which the receiver is connected.
Consult the dealer or an experienced radio/TV technician for help.

FCC Caution

Any changes or modifications not expressly approved by the party responsible for compliance could void the user's authority to operate this equipment. This transmitter must not be co-located or operating in conjunction with any other antenna or transmitter.