# Assembling Yarbo

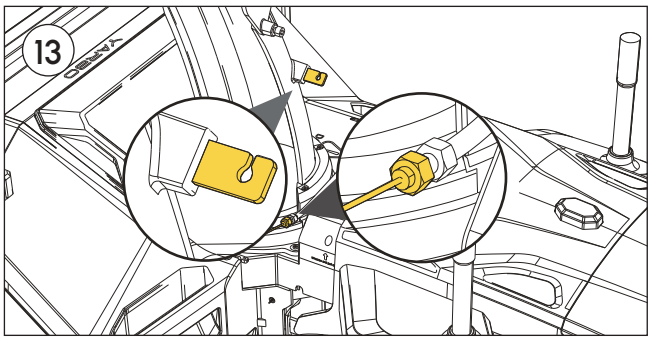


**Locate** the open loop and nut.
**Loosen** the nut on the top, DO NOT loose the other nut.

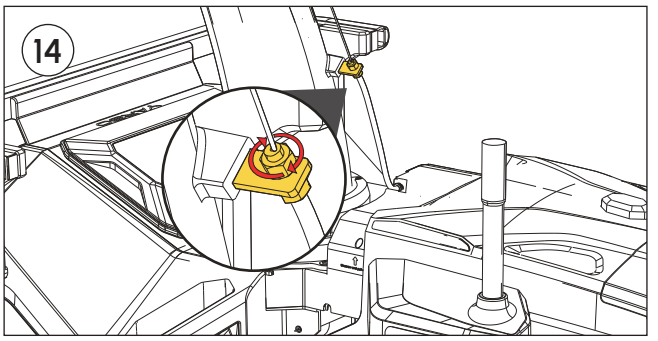


**Place** the cable in the open loop.

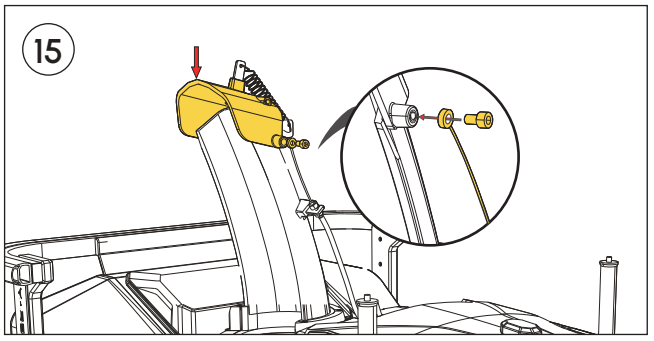


**Unscrew** the bolt.
**Press down** the deflector on the chute.
**Insert** the bolt through the ring at the end of the cable.
**Screw** the bolt back in place, use Allen Key #4.

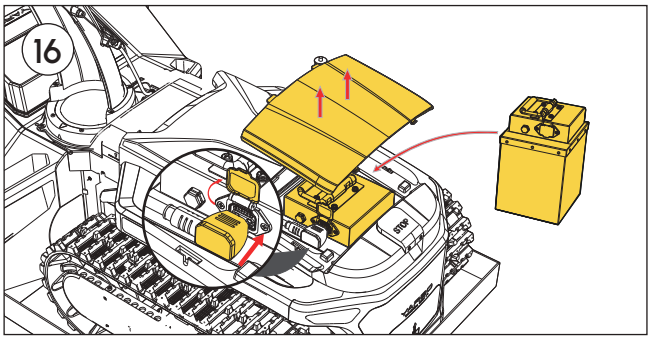


**Remove** the cover by grasping both sides with your hands.
**Place** the battery inside.
**Connect** the cable from the Universal Body to the battery.

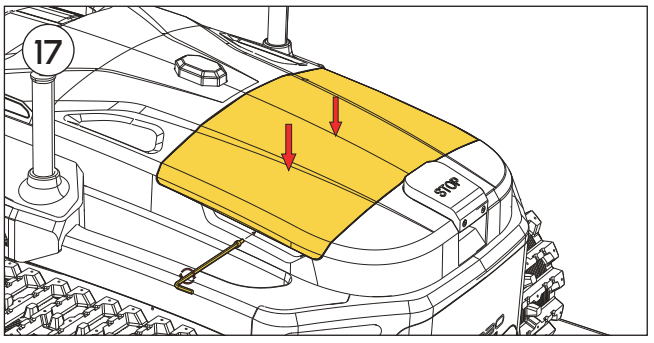


**Press** the cover back in to place.
**Screw** the Anti-theft Bolts for Battery Cover on both sides with Allen Key #1.

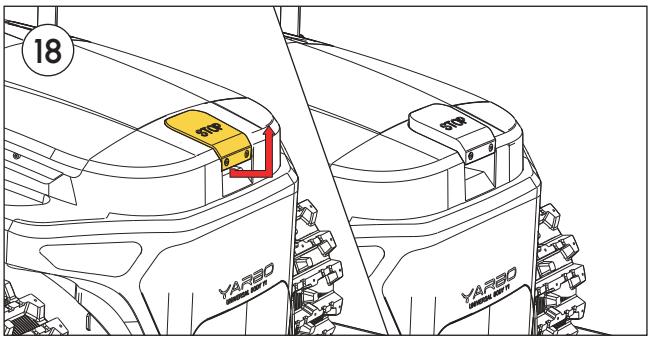


**Lift** the Emergency Stop Button.

# Assembling Yarbo

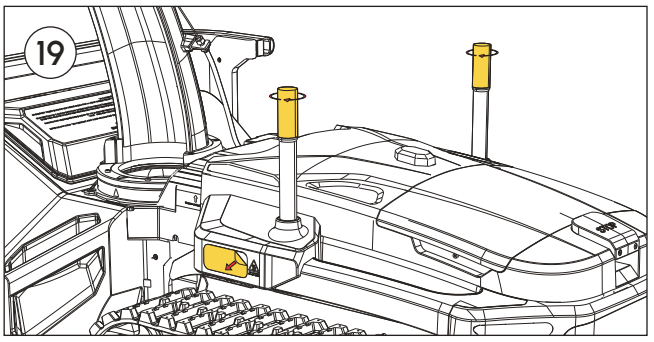


**Gently attach** the antennas to the designated connectors using two fingers.
**Remove** the protective film from all three cameras. Remember, there are two side cameras and one front camera.

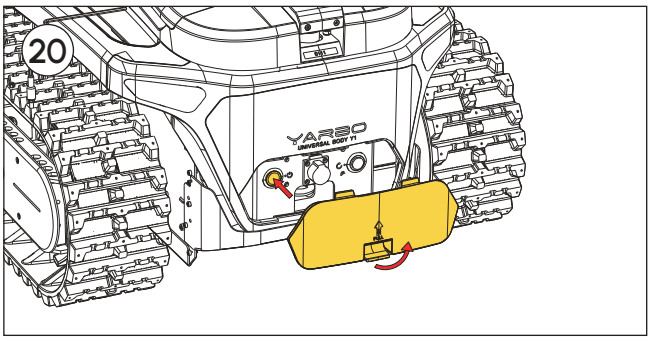


**Remove** the rear cover.
**Press** the power button to turn on Yarbo.
**Reinstall** the cover

**NOTICE**

- The screw connecting RTK Antennas and Universal body is very fragile. Please tighten it very carefully by using two fingers.

# Assembling RTK Set

## Method 1 Roof Installation(recommended)

Make sure there's a clear view of the sky with at least 120° of unobstructed space.

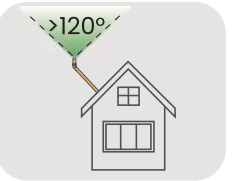


## Method 2 Wall Installation

Make sure there's a clear view of the sky with at least 120° of unobstructed space.

## Method 3 Ground Installation

Make sure there's a clear view of the sky with at least 120° of unobstructed space.

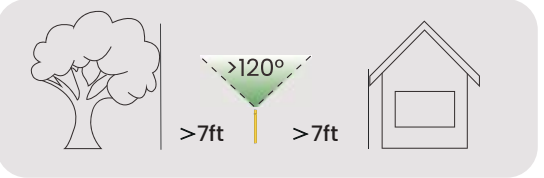


### ⚠ CAUTION

- Please read through all the following installation methods, and make sure you understand how to use required tools before installation.

### ⚠ NOTICE

- You don't need to use all three poles provided in the packaging for a full installation, if using one or two poles already gives you an 120° of unobstructed sky view.
- The most important thing for RTK Set installation is to ensure the antennas have an 120° of unobstructed sky view. Please choose the most suitable method for your home.