Assembling RTK Set

Method 1 Roof Installation

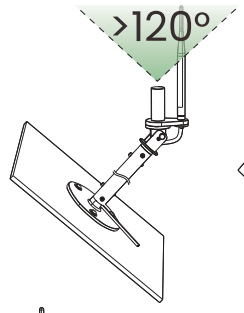

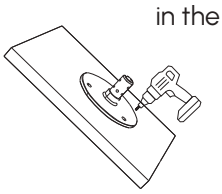

① Position the mount on the roof. Mark and drill three holes (5/16" or 8mm) in the roof for securing.

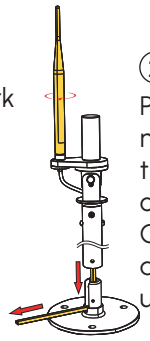

② Position the pole onto the mount.Thread the cables-through the designated opening in the mount. Gently attach the LoRa antenna to the connector using two fingers.

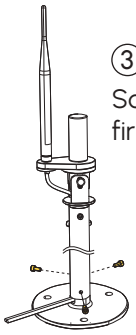

③ Screw in the connection bolts firmly with Allen Key #3.

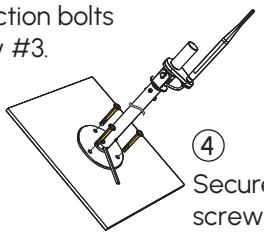

④ Secure the mount by screwing in the three expansion bolts provided.

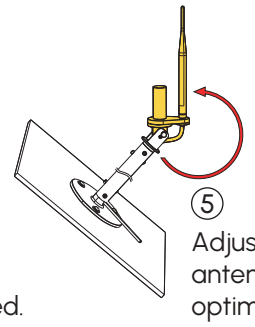

⑤ Adjust the angle of the antenna to ensure optimal positioning.

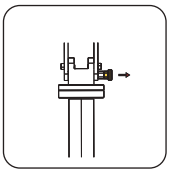

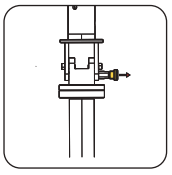

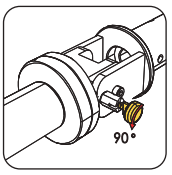

1.Gently pull and rotate the knob 90 degrees clockwise.

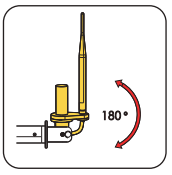

2.Adjust the angle to ensure the antenna is directly facing the sky.

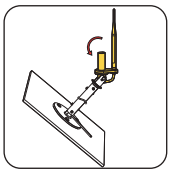

3.Rotate the knob counter clock-wise until you hear or feel a click, and the knob will return to its original position.

⚠ WARNING

- Please take extra care when installing the RTK Set on the roof.
- Follow your local area's guidelines on working at heights, use suitable protections.

Assembling RTK Set

Method 2 Wall Installation

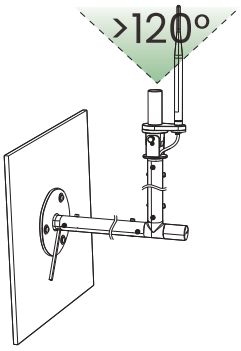

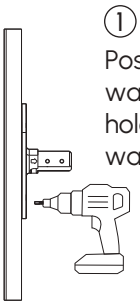

① Position the mount on the wall. Mark and drill three holes (5/16" or 8mm) in the wall for securing.

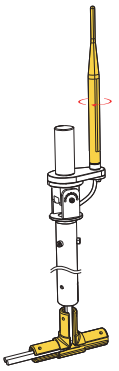

② Position the pole on the T-joint and thread the cord through the T-joint. Gently attach the LoRa antenna to the connector using two fingers.

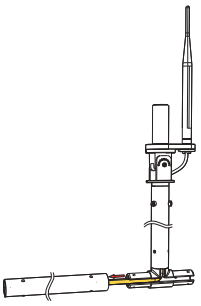

③ Pass the cables through another pole and connect it with the T-joint.

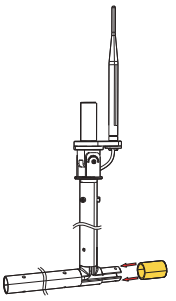

④ Securely attach the cap to the open end of the T-joint.

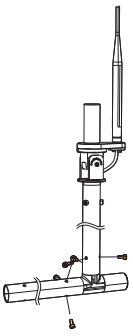

⑤ Screw in the connection bolts firmly twith Allen Key #3.

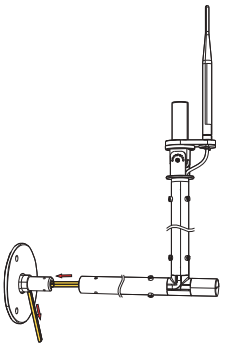

⑥ Position the pole onto the mount. Thread the cord through the designated opening in the mount.

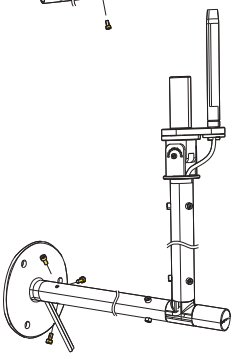

⑦ Screw in the connection bolts firmly.

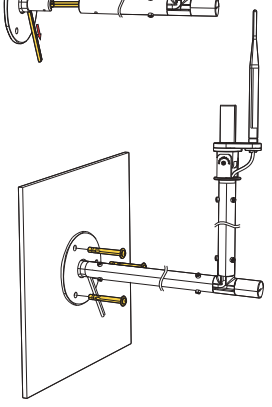

⑧ Tighten the three expansion bolts while ensuring that the antenna is oriented directly towards the sky, following the same procedure as the last four steps of the roof installation.

⚠ WARNING

- Please take extra care when installing the RTK Set on the wall.
- Follow your local area's guidelines on working at heights, use suitable protections.

Assembling RTK Set

Method 3 Ground Installation

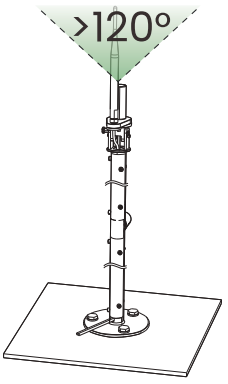

① Make sure the place you want to install the RTK Set has an unobstructed view of sky.

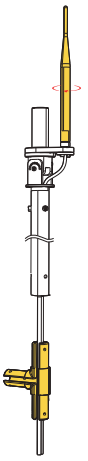

② Position the pole on the T-joint and thread the cord through the T-joint. Gently attach the LoRa antenna to the connector using two fingers.

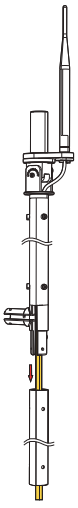

③ Pass the cord through another pole and connect it with the T-joint.

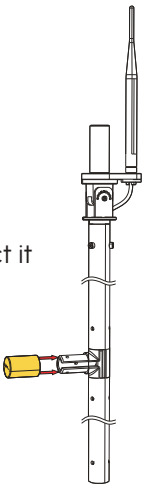

④ Securely attach the cap to the open end of the T-joint.

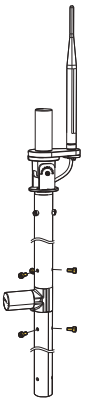

⑤ Screw in the connection bolts firmly with Allen Key #3.

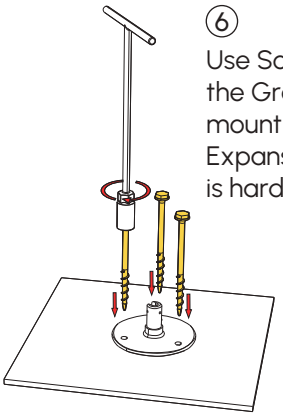

⑥ Use Socket #3 to screw in the Grass Pegs to secure the mount on the lawn. Use Expansion Bolts if the surface is hard.

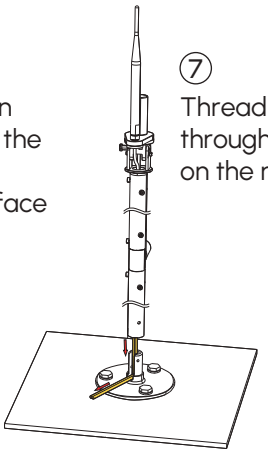

⑦ Thread the cables through the opening on the mount.

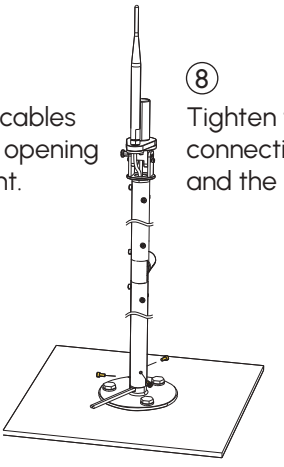

⑧ Tighten the bolts connecting the Pole and the Mount.

Assembling RTK Base

Step 1

Lay out the cord to the indoor RTK base.

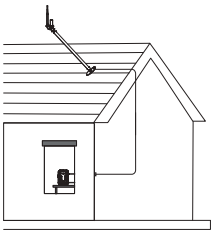

Step 2

Connect the 2 cables from the outdoor antenna to ports on RTK Base.
Tighten the nut at the end of LoRa Cord.

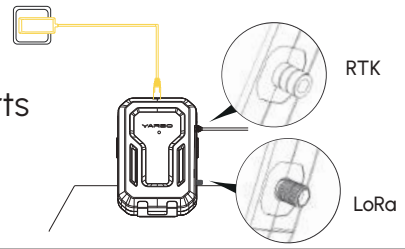

Step 3

Plug the adapter into the outlet and ensure that a solid green indicator light is visible.
Allow up to 5 minutes

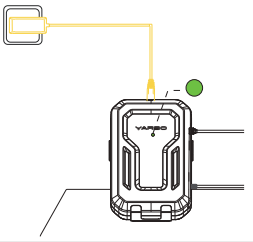

Step 4

Position the RTK base on the holder.

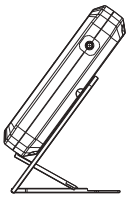

Observation	Meaning	Action
● Fast flashing red	No RTK Signal	Check cord connection is correct, inspect if antenna is broken.
● Flashing red	Weak RTK Signal	Wait for 5 minutes, to see if the LED turns green. If not, try different RTK antenna locations, ensure 120° view of sky.
● Solid red	No Internet connection	Set up internet in the App.
● Solid green	Internet connected	-

Installing the Docking Station

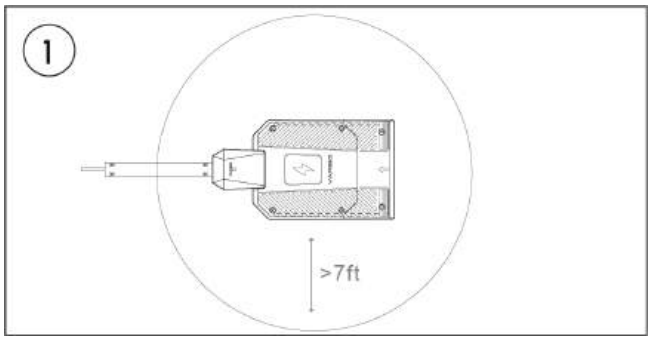

Check the location where you want to install the Docking Station has at least 7 feet free space in every direction.
Make sure you have already initialised Yarbo through the Yarbo App before proceeding to next steps.

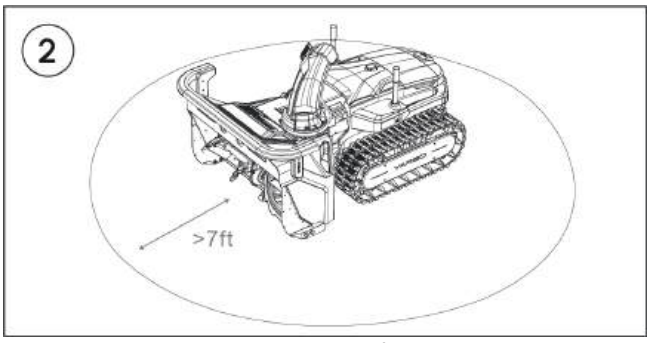

Drive Yarbo to the desired location for installation.
Check GPS and network connection status on Yarbo App when Yarbo reaches the desired location*. If connection status for RTK signal is not displayed as 'Strong', change the installation location.
*Yarbo needs to stay at the desired location for at least 5 minutes to achieve a consistent RTK signal reading.

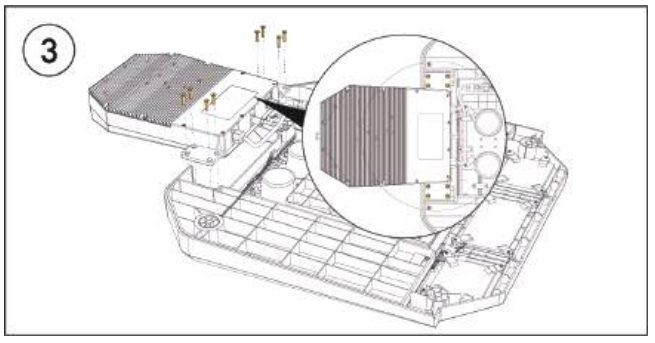

Place the Docking Station Control Unit and the Charging Unit up-side-down on the ground.
Tighten 8 bolts by Allen Key #2.

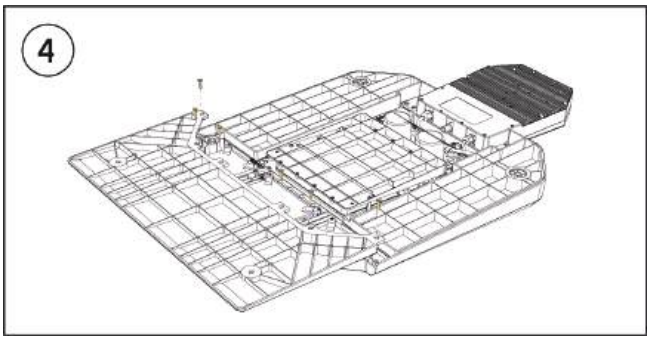

Place the Slope up-side-down on the Charging Unit.
Tighten 6 bolts with Allen Key #2.

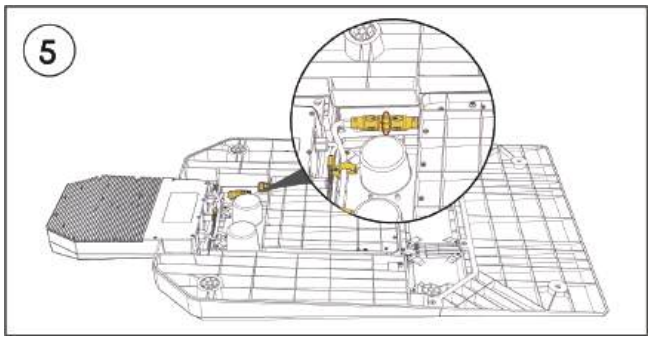

Connect the connectors. The thicker cable requires inserting the connectors in place first, and then secure the connection by rotating the ring in the clockwise direction.
Secure the cables with clips provided.

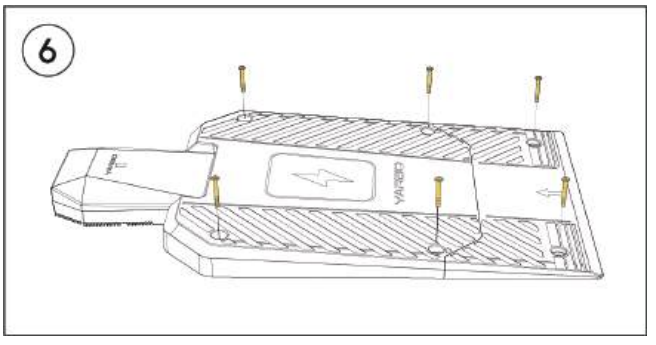

Place the Docking Station on the desired location.
Secure the Docking Station by suitable methods depending on your yard's surface. For soil/grass surface, use grass pegs. For concrete/brick surface, use expansion bolts. Grass pegs and expansion bolts are provided in the package.

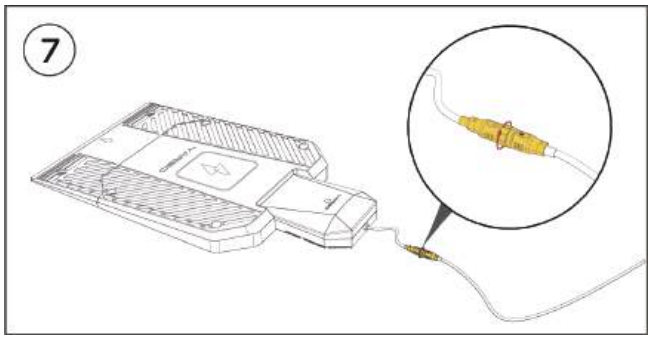

Connect the Power Cable to the Control Unit, by inserting the connectors in place first, and then secure the connection by rotating the ring on clockwise direction.
Connect the Power Cable to power.

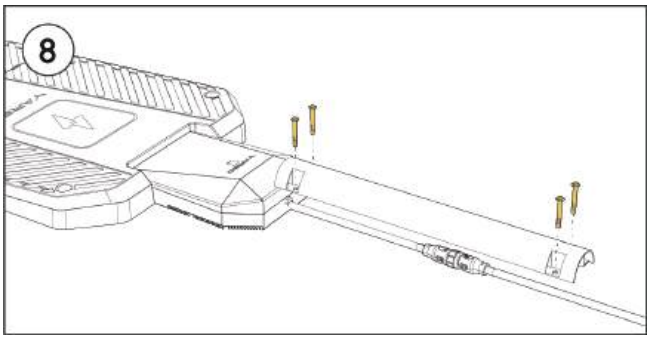

Place the Power Station Cable Ramp on the Power Cable.
Secure the Cable Ramp by suitable methods.
DO NOT place cable inside the working area or pathway.

Optional: Removing the Snow Plume Diverter

The Snow Plume Diverter should be removed when Yarbo is dealing with wet snow. The purpose of the Snow Plume Diverter is to provide a stream of snow when throwing common types of snow. When the snow is wet, this device can make the impeller and the discharge chute more likely to clog. Shut down Yarbo completely before removing the Snow Plume Diverter.

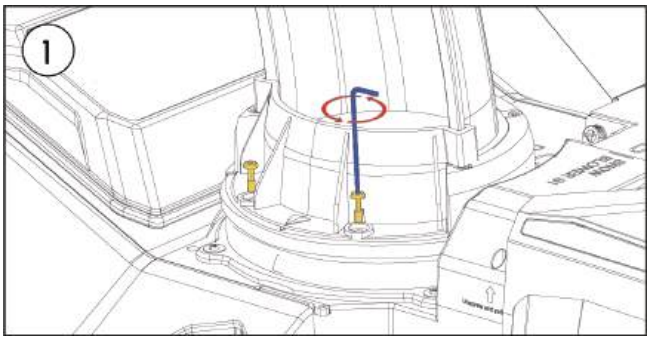

Unscrew and **remove*** the bolts holding the Snow Plume Diverter.

*If you find difficult to remove these bolts,
try to lift and hold the diverter while unscrewing this bolt.

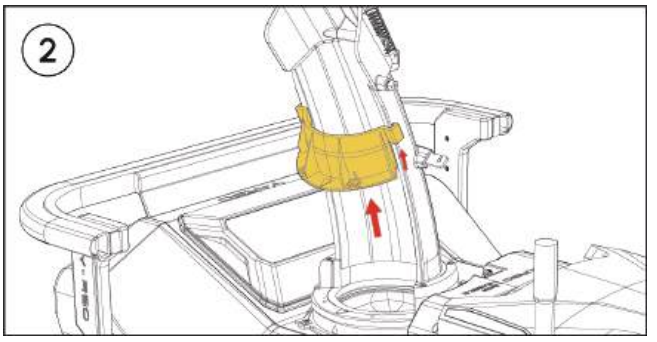

Lift up the Snow Plume Diverter along the track on the Discharge Chute.

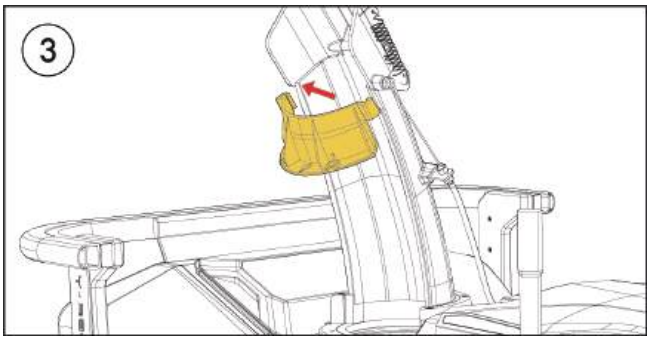

Remove the Snow Plume Diverter.
Properly store it for late use.

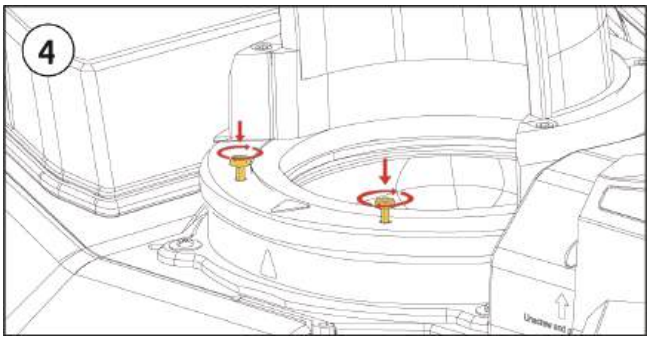

Tighten the earlier removed bolts.

⚠ WARNING

- Wear suitable Personal Protective Equipments (PPE). Always wear protective gloves and protective goggles when performing maintenance tasks or whenever necessary.
- Make sure Yarbo is turned OFF, disconnect battery pack if necessary.
- Make sure all moving parts have completely stopped.

Optional: Installing the Skid Shoes

The Skid Shoes should be installed when Yarbo encounters uneven surfaces that significantly influences its performance. The purpose of using Skid Shoes is to lift the Snow Blower Module up a bit at all time to avoid the Scraper Bar touching the ground. Installing the Skid Shoes can lead to insufficient snow-removal results.

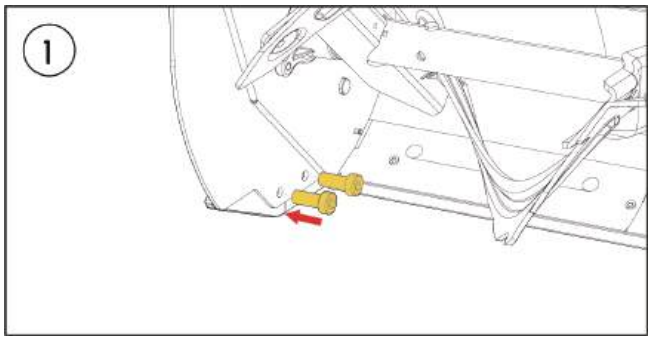

Insert the bolts (in the Skid Shoes Bag) through the holes on the auger housing.

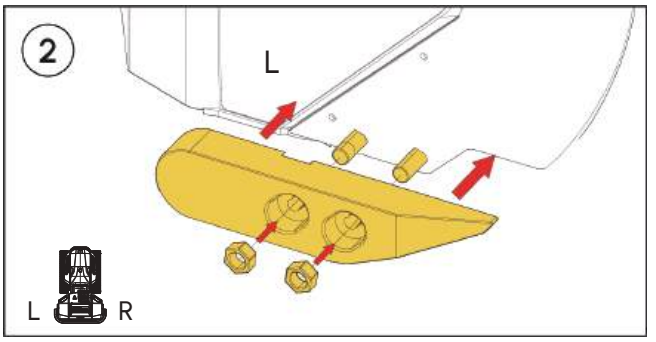

Attach the Skid Shoe onto the bolts, and use the nuts in the bag to connect the Skid Shoe onto the auger housing. The Skid Shoe shown in the figure is the left Skid shoe.

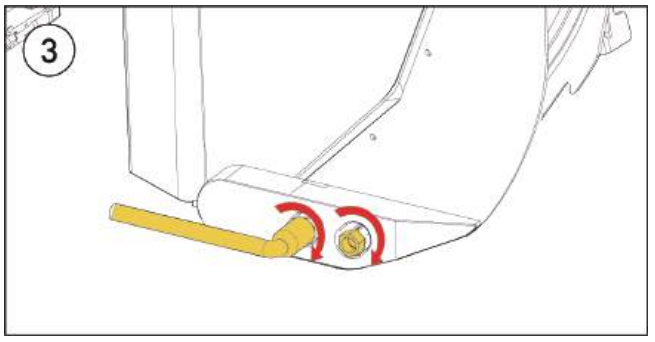

Firmly tighten the nuts with Socket #2.

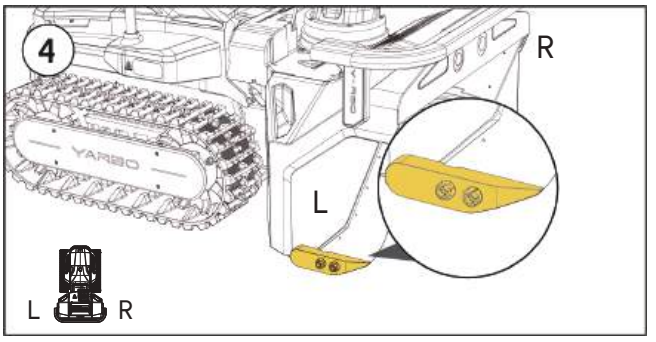

Repeat the action in Step 2 for the right side.

⚠ WARNING

- Wear suitable Personal Protective Equipments (PPE). Always wear protective gloves and protective goggles when performing maintenance tasks or whenever necessary.
- Make sure Yarbo is turned OFF, disconnect battery pack if necessary.
- Make sure all moving parts have completely stopped.

Optional: Installing the Anti-slip Studs

The Anti-slip Studs should be installed when Yarbo encounters very slippery surfaces that significantly influences its performance. The purpose of using Anti-slip studs is to provide extra friction on the Tracks. Installing the Anti-slip studs can damage the surfaces Yarbo operates on. DO NOT install the Anti-slip Studs if you don't want to have any scratches on your pavements, garage and Yard.

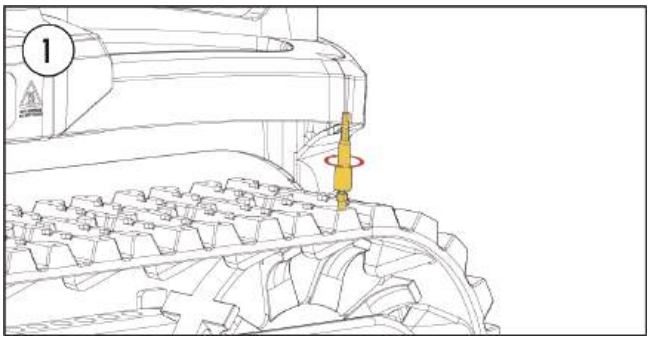

Tighten the Anti-slip Stud onto the track by Socket #1*.

*Socket #1 is designed for power tools. You can use a suitable power tool to save a lot of time for this installation.

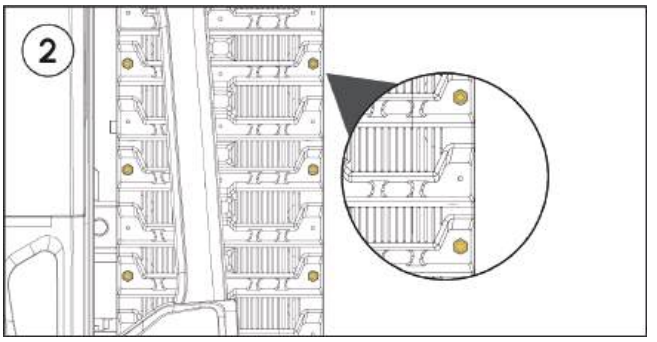

Install the Anti-slid studs on both ends of a single cleat.
Install the 2 Anti-studs on every other cleat.

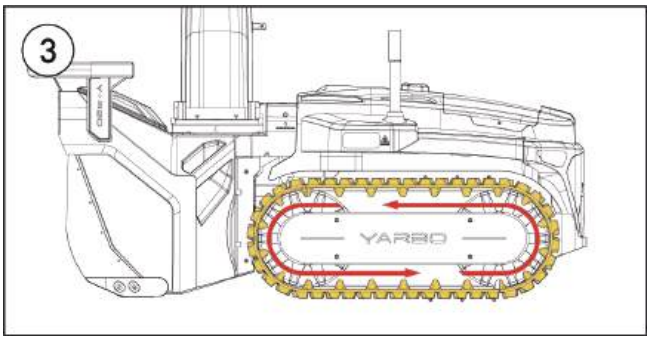

Move Yarbo forward to access additional cleats.

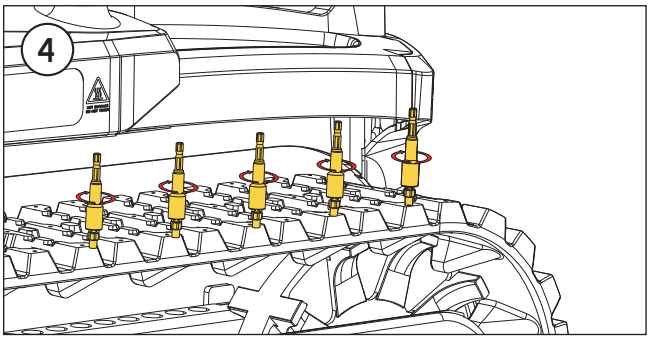

Repeat until bolts tracks (spacing one) being installed with Anti-slip Studs.

⚠ WARNING

- Wear suitable Personal Protective Equipments (PPE). Always wear protective gloves and protective goggles when performing maintenance tasks or whenever necessary.
- Make sure Yarbo is turned OFF, disconnect battery pack if necessary.
- Make sure all moving parts have completely stopped.

Installing Yarbo App

The Yarbo App is a professional application that empowers you to manage and control your Yarbo anytime, anywhere, elevating your yard care experience to new heights. With its impressive features, you can easily set up work schedules, define multiple working areas and no-go zones, specify snow-throwing directions, and monitor Yarbo's operating status. Additionally, you can receive the latest firmware updates and access instruction manuals, video tutorials, FAQs, and more through the App.
Follow these simple steps to install and set up the Yarbo App:

- Download the Yarbo App by scanning the QR code below or searching "Yarbo" on Google Play (for Android) or Apple Store (for iOS).
- After installation, log in to your Yarbo account. If you don't have one, please register.
- Scan the QR code on the back of your Yarbo to add it to your account. Ensure the machine is assembled before scanning the code.

*Note: Once a device is associated with a Yarbo account, it cannot be linked to a new account. However, you can invite others to use your Yarbo through Yarbo Sharing in the app.

IOS

Available on the App Store

Android

GET IT ON Google Play

Mapping

Before proceeding with the setup of Yarbo, it is essential to thoroughly read and understand the instructions, including map creation and prohibited operations. The provided illustration serves as a helpful reference to ensure proper installation. Feel free to refer back to this illustration whenever you require further clarification during the setup process.

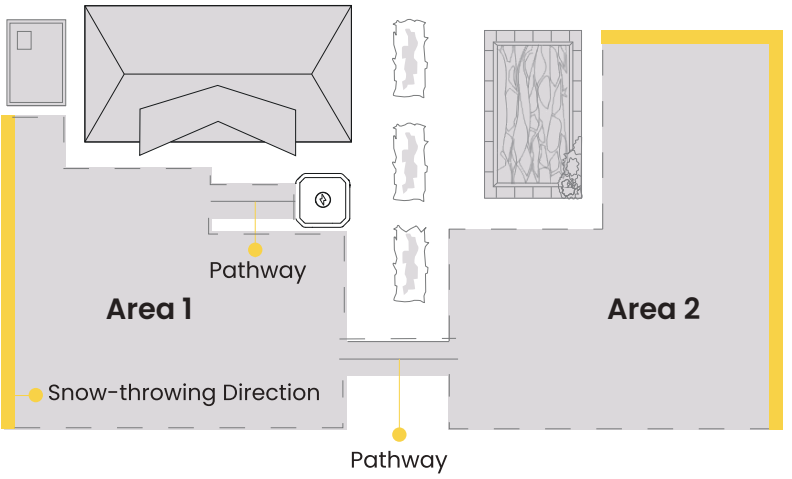

Map Creation Guidelines

- A map should encompass the docking station, pathways, working areas, no-go zones, and designated snow-throwing directions.
- Pathways are used to connect independent working areas or establish a connection between the starting point and a working area. No-go zones indicate areas where the robot is restricted from operating, while snow-throwing directions specify the direction for snow discharge.
- It is strictly prohibited to set snow-throwing directions towards the driveway, parking space, or areas with heavy pedestrian traffic.
- The docking station must not be installed inside any designated working area.
- Once the mapping process is complete, the robot will autonomously execute tasks in a systematic pattern.
- If you relocate the docking station, it is necessary to recreate the working area to ensure accurate task execution.
- When the robot is charging, it will commence autonomous task execution only when the battery level exceeds 80%.
- During the mapping process, maintain a minimum distance of 20 inches between the edges of the robot and the wall to avoid triggering unnecessary obstacle avoidance.
- Ensure that the slope in the working area does not exceed 36% (20°) for safe and efficient operation.

Virtual Controller

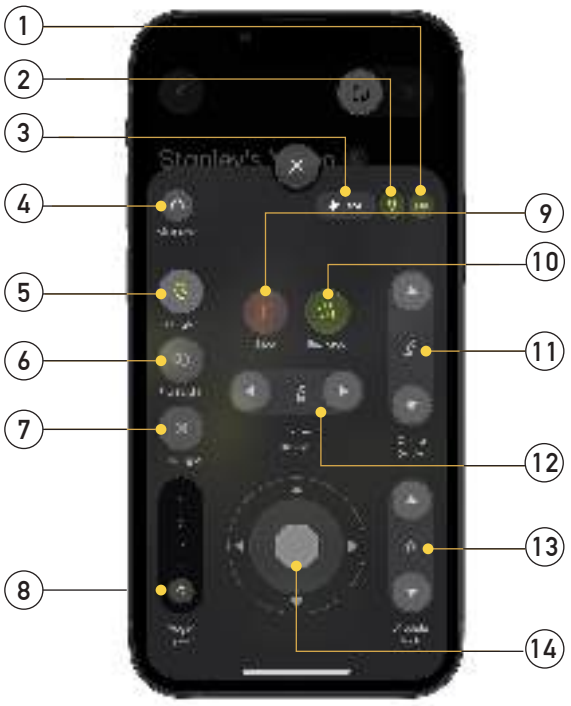

Status Bar Display:

① ***GPS Signal:*** Monitor the strength and reliability of the GPS signal, essential for accurate tracking and positioning.

② ***Network Strength:*** Check the status of the network connection to ensure seamless communication and data transfer.

③ ***Battery Percentage:*** The capacity of power remaining in your Yarbo's battery.

Control Buttons:

④ ***Clear Error:*** Provide Yarbo with the ability to exit from error conditions, such as overcurrent, for a smooth operation.

⑤ ***All Lights Control:*** Control and manage the illumination on Yarbo device. Easily toggle all lights on or off as needed.

⑥ ***Front Light Control:*** Control the front-facing lights for improved visibility in low-light conditions or dark environments.

⑦ ***Side Light Control:***Adjust the settings for side lights, providing versatile lighting options based on your operational needs.

⑧ ***Auger Speed Control:*** Regulate the speed of the auger for precise handling and an efficient snow-blowing process.

⑨ ***Stop:*** Stopping operations instantly ensures safety and control during unexpected events.

⑩ ***Recharge:*** Send Yarbo to the docking station to begin the recharging process. Chute Rotation Control: Adjust the direction of snow blowing with precision.

⑪ ***Chute Angle:***Adjust the deflection settings to control the angle and the snow throw distance.

⑫ ***Chute Rotation Control:*** Adjust the direction of snow blowing with precision.

⑬ ***Module Angle:***Manage the angle of a snow blower module, providing flexibility and adaptability to different operational scenarios.

⑭ ***Steering Wheel:***Press and hold the circular pad to activate the steering mechanism, making it easy to navigate and maneuver the Yarbo device.

Setting up Pathways

Pathway: A pathway is a line to connect the Docking Station to the Working Area or 2 Separate Areas.

To create pathways between multiple working areas, please follow the step-by-step procedures provided in the animated video available in the Yarbo App.

Working Area Mapping

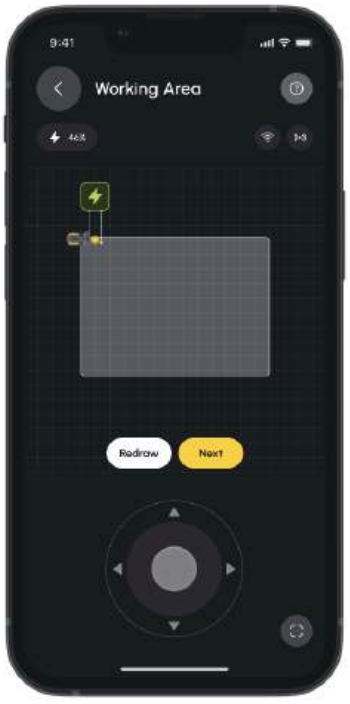

Working Area: This refers to the designated region where Yarbo operates. Please ensure that the area you outline is fully enclosed and connected to the previously established pathway.

Note: This process is simplified by only using the mobile App. You may opt to move the Yarbo by the remote controller.

To map the work area, follow these steps using the Yarbo App:

- Ensure the robot is powered on, with the battery level above 80%, and connected to stable internet and a strong GPS signal.
- Use the App to remotely control Yarbo and guide it to move around the designated cleaning area. Create a pathway between the docking station and the area you want to clean. If any issues arise, press the emergency stop button to halt the operation.

Creating a No-go Zone

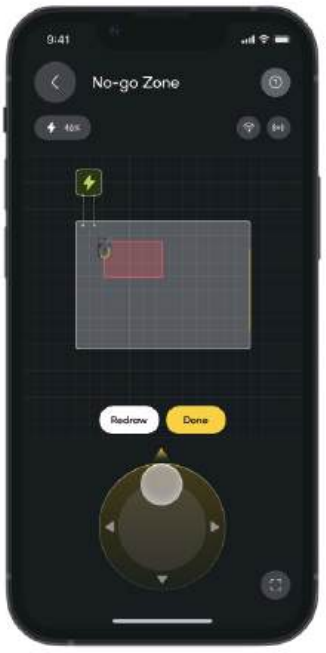

Yarbo is equipped with an advanced avoidance system that allows it to navigate around obstacles during its operation. To enhance the efficiency of snow removal and prevent Yarbo from entering restricted areas, such as swimming pools, narrow lanes, and sprinkler heads, follow these steps to create a no-go zone:

- Guide Yarbo into the working area, and mark the specific areas where you prefer Yarbo to avoid. These could include spaces with delicate objects, obstacles, or places where you don't want Yarbo to operate.
- Click the "Done" button, and Yarbo will avoid these designated no-go zones during its snow-clearing tasks, ensuring safe and efficient operation.

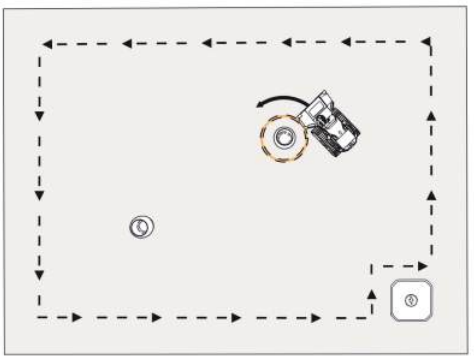

To set up no-go zones, you can easily follow the step-by-step animated video guide available in the Yarbo App.

Set up the Snow-throwing Directions

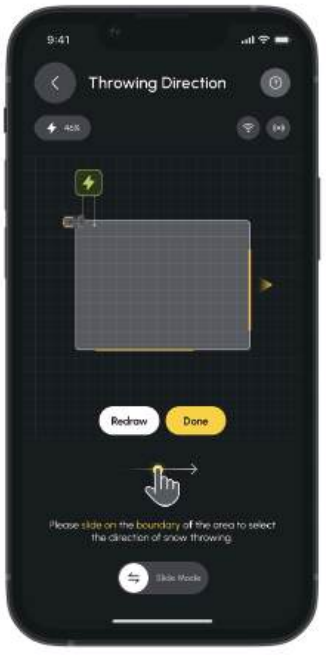

Snow-throwing Directions: To properly configure the snow-throwing directions, we recommend following the step-by-step animated video guide in the app.

Please note that it is strictly prohibited to set the snow-throwing directions towards the driveway, parking space, or roads with heavy pedestrian traffic.

⚠ WARNING

DO NOT operate Yarbo indoors.

Manual Control Using the Controller

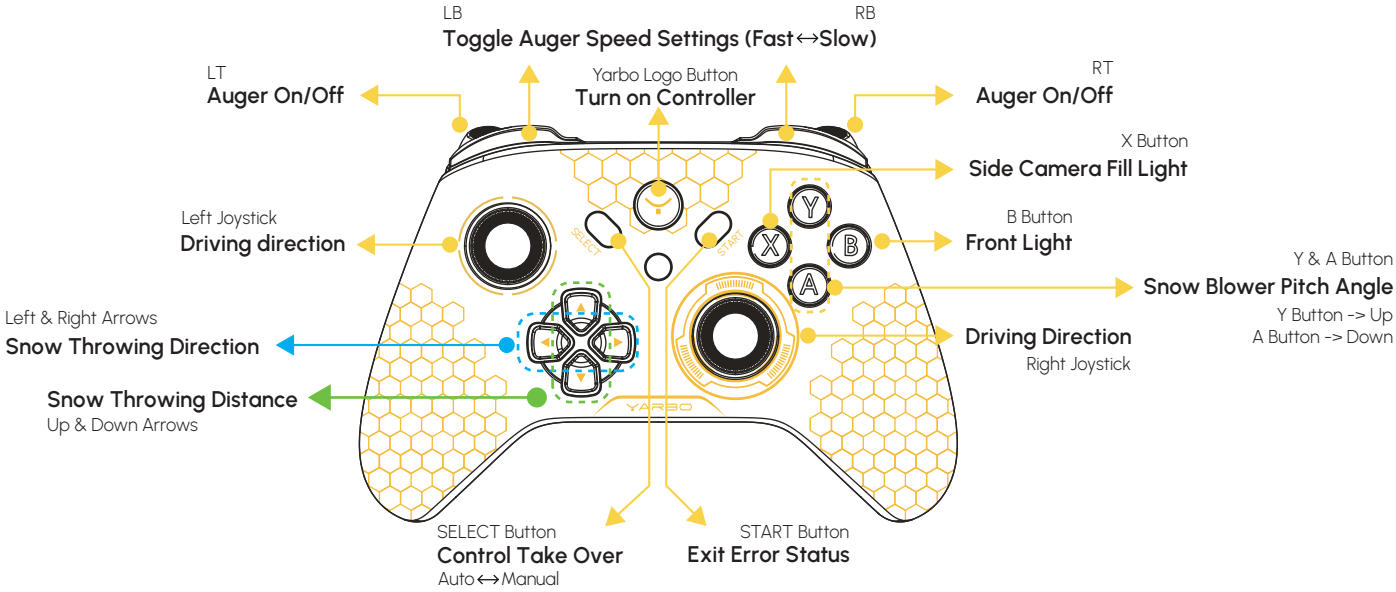

Knowing the Controller

Yarbo Logo Button:

This button activates the controller and manages the pairing with Yarbo. To power on the controller, press and hold the logo button for 2 seconds. For powering off, press and hold the "SELECT+B" buttons for 2 seconds. The controller will vibrate to indicate its power status. If not in use, the controller will automatically power off after 5 minutes.

Observation	Meaning
Solid Red Light	Low Battery(<20%).
Flashing Yellow Light	Not connected or is connecting to Yarbo.
Solid Yellow Light	Connected to Yarbo.

Left Joystick and Right Joystick:

These two joysticks control the direction of movement and speed of the robot. Push the stick around to control Yarbo's movement in any direction. Press the left and right stick vertically down to switch between two-speed settings (speed settings will be memorized).

Directional Pad (D-pad):

Press and hold the buttons to control the discharging direction and distance.

Y Button:

This button controls the Snow blower module to pitch up. Press and hold the button to continuously pitch up the Snow blower module until it reaches the highest position. Release the button to stop at the current angle.

B Button:

Press this button to turn on and off the front lights (default setting is on).

A Button:

This button controls the snow blower module to pitch down. Press and hold the button to continuously pitch down the Snow blower module until it reaches the lowest position. Release the button to stop at the current angle.

X Button:

Press to turn on and off the side camera fill lights (default setting is on).

Left Trigger (LT) and Right Trigger (RT) Button:

These triggers control the speed of the auger. By default, it starts at the lowest speed. The deeper you press down the trigger, the faster the auger rotates. Release this button to stop the auger.

⚠ WARNING

- Always ensure that the surrounding environment is safe for auger operations before turning on the auger. Make sure you are at least 17 feet away from Yarbo before you turn on the auger.
- Always ensure that the throwing direction is safe for auger operations before turning on the auger. NEVER throw at people or directions where people and pets are likely to appear.

⚠ CAUTION

- Noise alert: turning on the auger could be noisy, DO NOT turn on the auger indoors.

Left Bumper (LB) and Right Bumper (RB) Button:

Press to switch the two auger speed settings (cycle through faster and slower).

⚠ NOTICE

- To toggle the auger speed, the auger must be turned on first, which means you should hold the LT or RT button while pressing LB or RB.

SELECT Button:

Press and hold this button for 3 seconds to switch the control from autonomous to manual.

START Button:

Press this button to exit from error status, including overcurrent and other issues.

Connecting Yarbo Controller

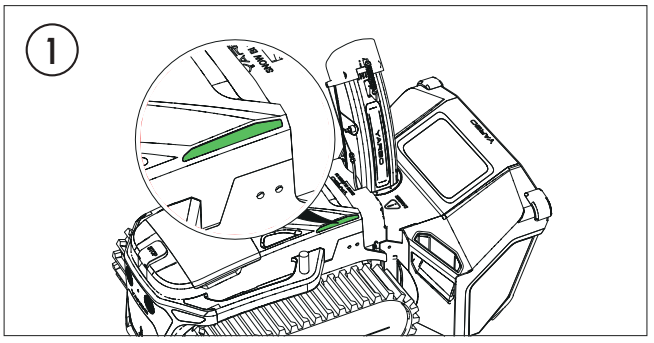

Before proceeding, ensure that Yarbo is powered on. A solid green light on the Yarbo (shown on following figure) indicates that Yarbo is powered on and ready for the controller setup.

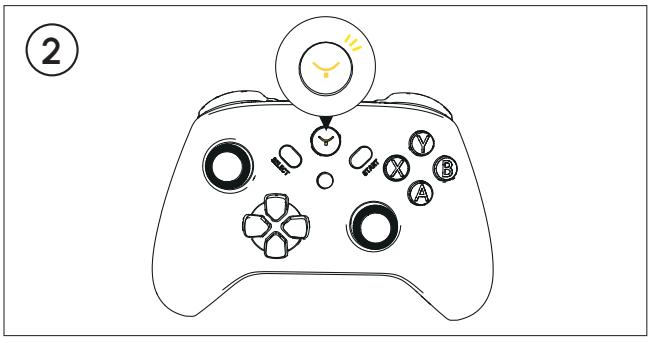

To initiate the pairing process, press and hold the Yarbo Logo button. When the yellow light starts flashing, the pairing is ready to begin.

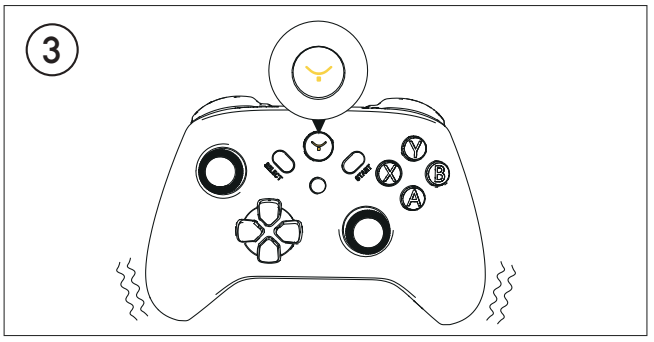

Wait for 3 to 5 seconds until the light becomes solid yellow and the controller vibrates.

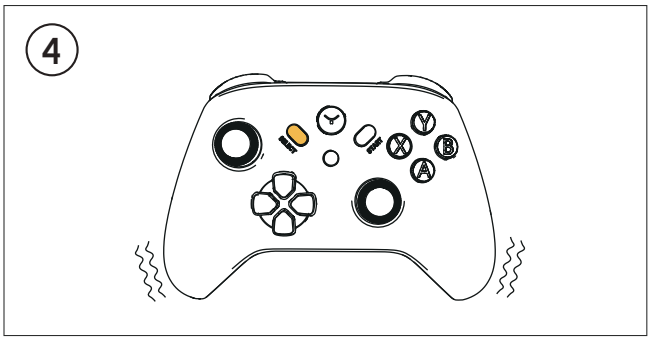

To start operating Yarbo, press and hold the "SELECT" button for 3 seconds. Once Yarbo is activated, you can control its movements and start clearing the snow using the controller.

⚠ WARNING

- Never allow unauthorized nor untrained persons to use the controller.
- Never put the controller within the reach of children.

⚠ CAUTION

- DO NOT expose the controller to moisture or store it in freezing temperatures for an extended duration.
- DO NOT spill water or snow on the surface of the controller. If any water or snow comes into contact with the controller, remove it immediately.

⚠ NOTICE

- Please note that any damage or malfunction caused by or misuse of the controller will not be covered by the warranty.
- Using the controller while it is being charged is not recommended.

Charging Yarbo with the Wired Charger

⚠ WARNING

- Charging Yarbo indoors is not recommended, lithium-ion battery packs can cause fire and explosion if it has been abused. Check your local regulation on charging lithium-ion battery packs for more information.

1. Before charging Yarbo, check the voltage switch on the wired charger and set it to your home's AC voltage.

⚠ WARNING

- Wrong voltage setting will damage the wired charger and Yarbo's battery pack, may lead to fire and explosion.

⚠ NOTICE

- By default, the voltage switch should already be set to your area's appropriate voltage setting when you receive Yarbo. If you reside in the United States, set the input voltage on the wired charger power adapter to 120V. However, if you are in the UK or France, set it to 230V.

2. Connect the wired charger to an electrical outlet and the charging port under the rear cover of Yarbo.

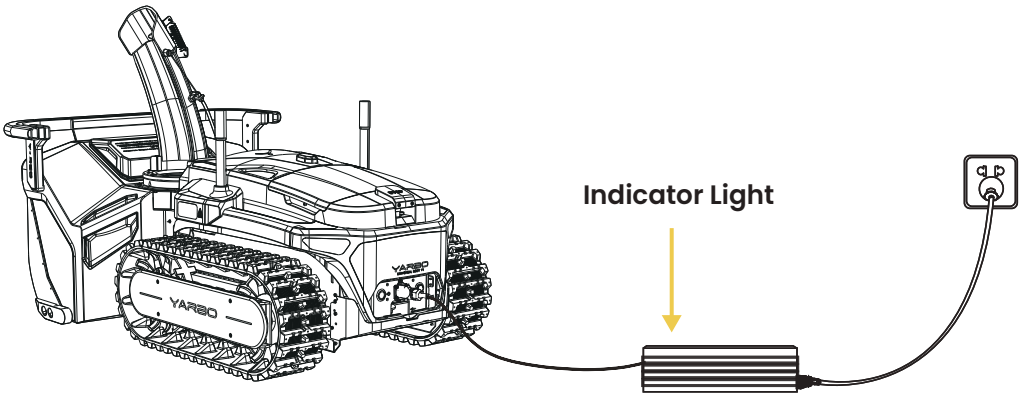

Observation	Charging	Fully Charged
LED 1	🔴	🔴
LED 2	🔴	🟢

Charging Yarbo with the Docking Station

Autonomous Recharge

Before using autonomous recharge, you need to: (1) make sure you have already set up a map for Yarbo, (2) Yarbo is located in your map's range.
Yarbo will automatically return to charge when it detects low battery level (<20%).
You can also manually send Yarbo to the docking station to recharge by:
1. Tapping the "Recharge" button on the Yarbo app's home page.
2. Tapping the "Recharge" button on the Yarbo app's virtual controller page.
3. Tapping the "Recharge" button on the Yarbo app's automonous plan page.

Manual Recharge

Use the physical/virtual controller, manually drive Yarbo onto the docking station (Snow Blower Module should facing out, meaning you need to back in Yarbo).
Once Yarbo detects it is located in the center of the docking station, charging will begin automatically.

⚠ WARNING

- An authorized and trained person must be present and supervise the operation when Yarbo is
- working autonomously.

⚠ CAUTION

- DO NOT let the product operate autonomously without supervision.
- Make sure the operator reads and understands everything in the manual.

⚠ NOTICE

- Please do not set the snow-throwing direction towards the Docking Station, as the
- Docking Station could be covered by the snow.

Before Conducting Any Maintenance

Please follow the warning signs below by listing order, these are essential steps to keep you safe and make sure Yarbo is ready for maintenance.

⚠ WARNING

- DO NOT wear open-toed shoes or be barefoot.
- Wear suitable Personal Protective Equipments (PPE). Always wear protective gloves and protective goggles when performing maintenance tasks or whenever necessary.
- Make sure Yarbo is turned OFF.
- Make sure all moving parts have completely stopped.DISCONNECT Battery Pack, remove the battery pack if necessary.

Disconnecting Battery from Yarbo

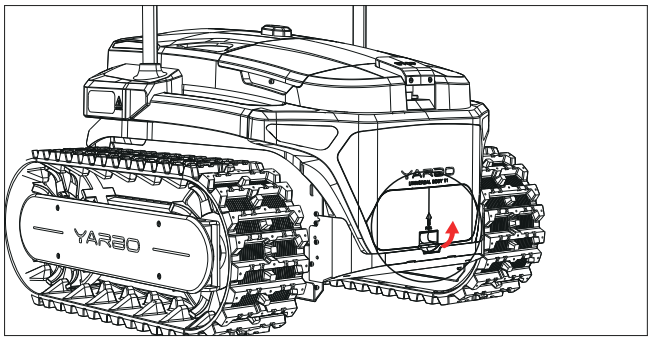

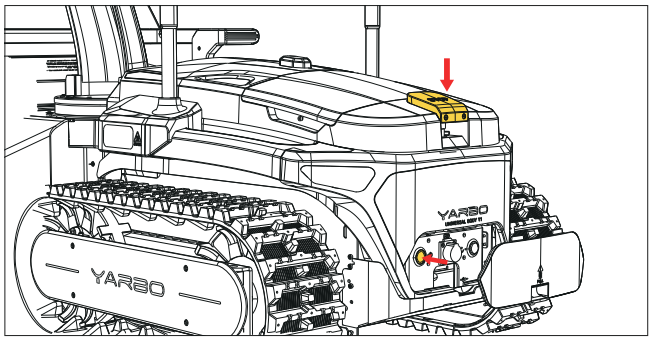

1. Press down the Emergency Stop Button.
2. Remove the rear cover of Yarbo.
3. Press the Power Switch to turn off Yarbo.
4. Make sure Yarbo is turned off by verifying if the lights on Yarbo are all OFF.
5. Unscrew the bolts (x2) on the sides of the battery cover, remove the battery cover by grasping on the sides.
6. Disconnect the cable connecting Yarbo and the battery pack.
7. Remove the battery pack if necessary.

Applying Grease on the Tracks

It is crucial to apply grease regularly on the tracks to maintain smooth rotation of the drive wheel and road wheels. This is especially important during the machine's first year of use. Over time, grease may degrade and diminish, making regular refills essential. We advise applying grease every two weeks throughout the snow season. While various grease types are suitable, we recommend opting for high-vacuum grease for optimal performance.

⚠ NOTICE

The presence of debris or mud on the rubber tracks can negatively impact Yarbo's driving performance. To maintain optimal performance, make sure to clean debris and mud from the rubber tracks on a regular basis.

Cleaning Yarbo

Please avoid using solvents on plastic components, as commercial solvents can potentially harm the appearance and integrity of your Yarbo. Instead, use a clean and gentle cloth or a brush to remove debris, mud, and other particles.

⚠ WARNING

- A camera that is covered, dirty, or unclear may cause confusion for the visual algorithms used for obstacle avoidance. If needed, please clean the cameras with a soft cloth.

Keeping Battery Pack Healthy

Leaving the battery pack inactive for an extended period will significantly reduce the battery pack's performance. To reduce the degradation of the battery pack, do not let the battery pack remain inactive for more than three months. Lithium-ion battery packs slightly self-discharges over time, charging the battery pack for 15 minutes at least once per three months will be enough to keep the battery active.

⚠ NOTICE

- The battery pack's lifespan is influenced by operation frequency and total working hours. If the operating time per full charge noticeably decreases, it may be time to consider replacing the battery pack.

Keeping Yarbo at its Best Performance

Before and after every operation, do:

1. Check the status of the discharge chute to ensure proper discharge functionality.

⚠ DANGER

- Shut down Yarbo before cleaning a clogged discharge chute.
- Clean a clogged discharge by the tool provided in the package, NEVER use your hand.
- Always keep hands away from the auger and impeller, no matter if it's running or not, always treat the product as it has been connected to power and ready to work.

⚠ NOTICE

- Operating with a clogged discharge chute can significantly shorten the motor's lifespan and lead to subpar snow removal performance.

2. Remove accumulated snow from Yarbo's surfaces.
3. Inspect the auger, housing, impeller, and shear pins for any signs of damage or wear. If any shear pins are broken or if the scraper bar and skid shoe show signs of excessive wear, replace them with new parts. Additional shear pins, scraper bars, and skid shoes can be ordered from authorized Yarbo dealers.

Updating Firmware

While it is important to keep Yarbo at its best performance at hardware level, it is also essential to keep the Yarbo's firmware up-to-date. The latest firmware updates will be regularly released on the Yarbo App. We strongly recommend updating the firmware through Yarbo App's built-in Over-The-Air (OTA) technology once new firmware is available. New firmwares will always provide better product capabilities.

Before proceeding to update firmwares, please ensure that the following conditions are met:

1. The battery level is at least 30%.
2. Yarbo is connected to the internet.
3. No working schedules are active within the next hour to prevent interruptions during the update process.

TRANSPORTATION, STORAGE AND DISPOSAL

Transporting Yarbo

When transporting Yarbo, please note:

1. Always disengage the power connection from the battery pack when transporting Yarbo.
2. Take extra care when moving Yarbo around. DO NOT lift Yarbo by holding the bumper in front of the Snow Blower Module.
3. Use a ramp to move Yarbo onto a vehicle.

⚠ WARNING

- DO NOT attempt to lift the robot onto a vehicle by a single person. Instead, disengage the snow blower module and the universal body, lifting them up separately. If necessary, seek assistance from others.

4. Please note that Yarbo contains a lithium-ion battery pack. Please follow your local area's guidelines on transporting such devices.

⚠ WARNING

- Transport the battery pack with care, secure the battery pack in place when transporting. DO NOT allow sudden vibrations or applying extra force on the battery pack.

Storing Yarbo

Before storing Yarbo, do the following steps for proper maintenance and preservation:

1. Thoroughly clean the auger, auger housing, and tracks to prevent corrosion.
2. Use a soft cloth or brush to remove dirt from the robot.
3. Ensure that all nuts, bolts, knobs, screws, and other components are securely tightened.
4. Remove the battery from Yarbo and store it in an appropriate location, avoid direct sunlight and open flame, keep the battery pack away from tiny metal objects (such as coins, paper clips and bolts).
5. Store Yarbo in a garage or a secure area away from children's reach.
6. Use a cover to shield Yarbo from dust and debris, maintaining its condition during storage.

⚠ WARNING

- Keep storage place away from fire.

Disposing Yarbo

To safely and responsibly dispose of Yarbo, you need to:

1. Disconnect and remove the battery pack. Recycle it At a certified recycling center. DO NOT discard the battery pack into regular waste.
2. Take the robot to an electronic waste facility for proper disposal.
3. Follow local regulations on disposing of electronic waste.

Please remember, responsible disposal protects the environment and complies with legal regulations.

TECHNICAL SPECIFICATIONS

Yarbo Universal Body Y1

Item	Value
Dimensions, length*width*height	26*22*20in / 666*568*512mm
Weight, without battery pack	113.3lbs / 51.4kg
Weight, with battery pack	135.4lbs / 61.4kg
Operational Temperature	-13°F to 113°F / -25°C to 45°C
Towing Ability	GTW. up to 3,500lbs / 1,600kg
Tongue Weight	GTW 3500lbs=150kg
Module Pitching Angle	0° to 20°
Internet Access Technology	4G, Wi-Fi
Navigation Technology	RTK, GPS
Charging Technology	Wired, Wireless
Obstacle Avoidance Technology	Collision sensors in Front Bumper, Computer Vision by cameras, Millimeter-wave Radar

Yarbo Battery

Item	Value
Dimensions, length*width*height	7*6*10in / 178*152*248mm
Weight, without battery pack	22.5lbs / 10kg
Nominal Voltage	36V
Nominal Capacity	38.4Ah
Operational Temperature	-13°F to 113°F / -25°C to 45°C
Battery Management System (BMS)	Over-heating, short circuit, over-current and over-charge protection
Charging Time (0 to 100% SOC, wireless charging using Yarbo Docking Station)	About 3 hours
Charging Time (30% to 80% SOC, wireless charging using Yarbo Docking Station)	About 1 hour and 15 minutes
Charging Time (0 to 100% SOC, using Wired Charger)	About 5 hours
Charging Time (30% to 80% SOC, using Wired Charger)	About 2 hours and 20 minutes
Battery Chemistry	NCM Li-ion

Yarbo Docking Station

Item	Value
Dimensions, length*width*height	46*25*3.5in / 1170*640*89mm
IP Rating	IP67
Operational Temperature	-13°F to 113°F / -25°C to 45°C
Charging Technology	Wireless Charging through embedded coils. No exposed contacts. Fully autonomous.
Conversion Efficiency	85%
Charging Voltage	42V
Installation Requirement	Level surface

Yarbo Snow Blower S1

Item	Value
Dimensions (with Discharge Chute), length*width*height	22*29*28in / 569*725*720mm
Dimensions (with Discharge Chute and Universal Body Y1), length*width*height	42*29*28in / 1068*725*720mm
Weight	67.9lbs / 30.8kg
Operational Temperature	-13°F to 113°F / -25°C to 45°C
Cleaning Width	21in / 53cm
Intake Height	12in / 30cm
Throwing Distance	6ft to 40ft / 2m to 12m
Chute Rotation Angle	0° to 180°
Deflector Angle	18° to 62°
Operational Snow Types	Flurry snow, dry snow, wet snow, packed snow, heavy snow.
Applicable Surface	Pavement, Brick, Stone, Concrete, Tarmac and Asphalt
Maximum Climbing Ability, percentage of slope	36%

Warranty Duration for Residential Use

Item	Parts	Warranty Period
Motor system	Steering Gear	2 Years
	Brushless Motor	2 Years
	Travel Motor	2 Years
	Linear Actuator	2 Years
	Walking Motor	2 Years
Power system	Lithium-ion Battery	2 Years
	Power adapter	2 Years
	Docking Station	2 Years
Electric control system	RTK system	3 Years
	Camera	2 Years
	Motherboard	2 Years
	Millimeter-wave radar	2 Years
Attachment	Snow Blower frame	5 Years
	Lawn Mower frame	5 Years
	Leaf blower frame	5 Years
Consumables and Accessories	Shell	1 Year
	Auger Blades	90 Days
	Shear pins	1 Year
	Skid shoes	1 Year
	Top chute	1 Year
	Impeller	1 Year

General Statement

1. Yarbo Inc. shall not be liable for compensation if it can prove one of the following circumstances: (1) The product has not been put into circulation; (2) When the product is put into circulation, the defect causing damage does not yet exist; And (3) When the product is put into circulation, the scientific and technological level cannot yet detect the existence of defects.
2. The warranty service is valid from the date of product delivery. When requesting after-sales service, our authorized service dealer may require the original invoice or receipt containing relevant information. In the absence of proof of purchase, the warranty period will commence based on the product's manufacturing date.
3. This warranty applies exclusively to original purchasers. Replacements do not initiate a new warranty; the original warranty remains valid from the initial delivery date. It's important to note that you may be responsible for covering the delivery costs associated with return, repair, or replacement of the product.
4. Yarbo will perform a diagnostic assessment on the returned product. If the defective product aligns with our limited warranty policy, Yarbo will cover the cost of repair or replacement. However, you may be responsible for the associated delivery charges.
5. Yarbo assumes no liability for any direct or indirect consequences arising from any cause, including but not limited to loss of use or loss of profits.
6. Please be mindful that any damage resulting from inappropriate packaging, other than the standard Yarbo packaging, is the sole responsibility of the customer. If you no longer have the original packaging, you must obtain suitable packaging or consult Yarbo's technicians for proper packaging guidance.

Service Procedure

1. To initiate a warranty service request, please visit our warranty service website at www.yarbo.com. Follow the outlined procedures for submitting a service claim. Alternatively, you can get in touch with our authorized service dealer within your local area to facilitate the warranty service process.
2. Our technical support team is available to assist you remotely. They will strive to diagnose and address minor issues that may lead to product malfunction. Reach out to us via telephone, email, or online chat to receive guidance on maintaining product functionality.
3. If the problem persists beyond online support, our technical experts may request you to complete a repair form. This will initiate the process of returning the faulty product to Yarbo for thorough examination.
4. Yarbo will undertake efforts to repair or replace the product in accordance with the terms of this Limited Warranty. Should the products meet the criteria outlined in the limited warranty policy, no charges will be incurred for the repair or replacement.

Return Statement

1. If the information provided for delivery is incomplete and results in a failed delivery attempt, Yarbo will make an effort to reach out to you for the purpose of obtaining the necessary address or vital details to successfully complete the delivery.
2. Should you fail to furnish an address suitable for Yarbo or its designated agent to deliver your product, or if you neglect to provide essential information required to adhere to shipping regulations, or if payment arrangements are not made within ninety (90) days following the initial delivery attempt, Yarbo will formally notify you of its classification of your product as abandoned. This notification will be sent to the mailing address you previously provided when authorizing service.
3. In the event that your product is deemed abandoned, Yarbo holds the right to dispose of the product in accordance with applicable legal provisions. Specifically, Yarbo may opt to sell the product through a private or public sale in order to cover any outstanding service costs.
4. Yarbo maintains the prerogative to invoke its statutory and other lawful liens for unsettled charges. This encompasses, but is not limited to, reasonable storage fees calculated at a rate of up to $30 per day.
5. This warranty may be forfeited if the product has been subjected to misuse, abuse, neglect, alteration, modification, or any form of unauthorized alteration.

Warranty Forfeiture

The warranty may be forfeited under the following circumstances:

1. Failure to adhere to the operating or maintenance guidelines outlined in the User Manual.
2. Neglecting to perform the prescribed battery and product maintenance procedures.
3. Modification or repair conducted by an unauthorized service provider.
4. Damages resulting from forced operation with aged or deteriorated components.
5. Damages or product malfunctions arising from the misuse of unauthorized components or accessories.
6. Damages caused by non-defective factors, including but not limited to crashes or collisions. Additionally, damages caused by manually operating the product with a low-charged or defective battery, or tampering with the seals and labels on the product.
7. Components subject to normal wear and tear, such as the auger, rubber track, belt, or other parts subjected to typical usage, are not covered by warranty. For the purchase of these items, kindly refer to our website at www.yarbo.com/pages/contact-us or connect with an authorized service dealer.
8. Warranty coverage does not extend to products used for commercial purposes. Commercial use includes instances where the product is employed in institutions, rented out, or utilized at multiple locations.

FCC Requirement

Any changes or modifications not expressly approved by the party responsible for compliance could void the user's authority to operate the equipment.
This device complies with Part 15 of the FCC Rules. Operation is subject to the following two conditions:

(1) this device may not cause harmful interference, and
(2) this device must accept any interference received, including interference that may cause undesired operation.

This transmitter must not be co-located or operating in conjunction with any other antenna or transmitter.

Note: This equipment has been tested and found to comply with the limits for a Class B digital device, pursuant to Part 15 of the FCC Rules. These limits are designed to provide reasonable protection against harmful interference in a residential installation. This equipment generates, uses, and can radiate radio frequency energy, and if not installed and used in accordance with the instructions, may cause harmful interference to radio communications. However, there is no guarantee that interference will not occur in a particular installation. If this equipment does cause harmful interference to radio or television reception, which can be determined by turning the equipment off and on, the user is encouraged to try to correct the interference by one or more of the following measures:
– Reorient or relocate the receiving antenna.
– Increase the separation between the equipment and receiver.
– Connect the equipment into an outlet on a circuit different from that to which the receiver is connected.

This device complies with FCC radiation exposure limits set forth for an uncontrolled environment. This device should be installed and operated with minimum distance 20cm between the radiator & your body.

YARBO INC.

www.yarbo.com

For Privacy Policy, please visit:
https://www.yarbo.com/legal/privacy-policy
Please note, the User Manual may be updated based on the changes in production, product specification, included contents and so on.
For the latest version of the User Manual, please visit:
https://www.yarbo.com/support

yarbo.com

Facebook

Instagram

YouTube

+1 (888)550-6809

support@yarbo.com

1951 Ocean Avenue, Unit 3, Ronkonkoma, NY 11779 United States