TCT 通测检测
TESTING CENTRE TECHNOLOGY

TEST REPORT

FCC ID. ..... :	2A9LJ-ME74	
Test Report No..... :	TCT240516E052	
Date of issue..... :	Aug. 28, 2024	
Testing laboratory ..... :	SHENZHEN TONGCE TESTING LAB	
Testing location/ address:	2101 & 2201, Zhenchang Factory Renshan Industrial Zone, Fuhai Subdistrict, Bao'an District, Shenzhen, Guangdong, 518103, People's Republic of China	
Applicant's name..... :	Meferi Technologies Co., Ltd.	
Address..... :	4F, A6, Tianfu Software Park, No. 1129, Century City Road, High-tech Zone, 610041, Chengdu, Sichuan, 610041 China	
Manufacturer's name ... :	Meferi Technologies Co., Ltd.	
Address..... :	4F, A6, Tianfu Software Park, No. 1129, Century City Road, High-tech Zone, 610041, Chengdu, Sichuan, 610041 China	
Standard(s) ..... :	FCC CFR Title 47 Part 2 FCC CFR Title 47 Part22 FCC CFR Title 47 Part24 FCC CFR Title 47 Part27 FCC CFR Title 47 Part90	
Product Name..... :	MOBILE COMPUTER	
Trade Mark ..... :	MEFERI	
Model/Type reference..... :	ME74	
Rating(s)..... :	Refer to EUT description of page 3	
Date of receipt of test item ..... :	May 16, 2024	
Date (s) of performance of test..... :	May 16, 2024 ~ Aug. 28, 2024	
Tested by (+signature) ... :	Brews XU	Brews Xu
Check by (+signature).... :	Beryl ZHAO	Beryl Zhao
Approved by (+signature):	Tomsin	Tomsin

General disclaimer:

This report shall not be reproduced except in full, without the written approval of SHENZHEN TONGCE TESTING LAB. This document may be altered or revised by SHENZHEN TONGCE TESTING LAB personnel only, and shall be noted in the revision section of the document. The test results in the report only apply to the tested sample.

TABLE OF CONTENTS

1. General Product Information 3
1.1. EUT description 3
1.2. Model(s) list 4
1.3. Emission Designator 5
1.4. Test Frequency 8
2. Test Result Summary 13
3. General Information 14
3.1. Test environment and mode 14
3.2. Description of Support Units 17
3.3. Configuration of Tested System 17
3.4. Measurement Results Explanation Example 17
4. Facilities and Accreditations 18
4.1. Facilities 18
4.2. Location 18
4.3. Measurement Uncertainty 18
5. Test Results and Measurement Data 19
5.1. Effective Radiated Power and Effective Isotropic Radiated Power Measurement 19
5.2. Peak to Average Ratio 21
5.3. 99% Occupied Bandwidth and 26dB Bandwidth Measurement 22
5.4. Band Edge and Conducted Spurious Emission Measurement 23
5.5. Field Strength of Spurious Radiation Measurement 25
5.6. Frequency Stability Measurement 39
Appendix B: Photographs of Test Setup
Appendix C: Photographs of EUT
Test Data: Refer to Appendix For 5G NR n 2, Appendix For 5G NR n 5, Appendix For 5G NR n 7, Appendix For 5G NR n 25, Appendix For 5G NR n 26-1, Appendix For 5G NR n 26-2, Appendix For 5G NR n 41, Appendix For 5G NR n 66, Appendix For 5G NR n 77 and Appendix For 5G NR n 78

1. General Product Information

1.1. EUT description

Product Name.....:	MOBILE COMPUTER
Model/Type reference.....:	ME74
Sample Number.....:	TCT240516E022-0102
Tx Frequency.....:	5G NR n 2: 1850 MHz ~ 1910 MHz 5G NR n 5: 824 MHz ~ 849 MHz 5G NR n 7: 2500 MHz ~ 2570 MHz 5G NR n 25: 1850 MHz ~ 1915 MHz 5G NR n 26-1: 814 MHz ~ 824 MHz 5G NR n 26-2: 824 MHz ~ 849 MHz 5G NR n 41: 2496 MHz ~ 2690 MHz 5G NR n 66: 1710 MHz ~ 1780 MHz 5G NR n 77: 3700 MHz ~ 3980 MHz 5G NR n 78: 3450 MHz ~ 3550 MHz
Rx Frequency .....:	5G NR n 2: 1930 MHz ~ 1990 MHz 5G NR n 5: 869 MHz ~ 894 MHz 5G NR n 7: 2620 MHz ~ 2690 MHz 5G NR n 25: 1930 MHz ~ 1995 MHz 5G NR n 26-1: 859 MHz ~ 869 MHz 5G NR n 26-2: 869 MHz ~ 894 MHz 5G NR n 41: 2496 MHz ~ 2690 MHz 5G NR n 66: 2110 MHz ~ 2180 MHz 5G NR n 77: 3700 MHz ~ 3980 MHz 5G NR n 78: 3450 MHz ~ 3550 MHz
Bandwidth.....:	5G NR n 2: 5MHz /10MHz /15MHz /20MHz 5G NR n 5: 5MHz /10MHz /15MHz /20MHz 5G NR n 7: 5MHz /10MHz /15MHz /20MHz 5G NR n 25: 5MHz /10MHz /15MHz /20MHz 5G NR n 26-1: 5MHz /10MHz 5G NR n 26-2: 5MHz /10MHz /15MHz /20MHz 5G NR n 41: 20MHz /40MHz /50MHz /60MHz /80MHz /100MHz 5G NR n 66: 5MHz /10MHz /15MHz /20MHz 5G NR n 77: 20MHz /40MHz /60MHz /80MHz /100MHz 5G NR n 78: 20MHz /40MHz /50MHz /60MHz /70MHz /80MHz /90MHz /100MHz
Maximum Output Power to Antenna.....:	5G NR n 2: 23.60dBm 5G NR n 5: 23.50dBm 5G NR n 7: 22.43dBm 5G NR n 25: 22.43dBm 5G NR n 26-1: 22.92dBm 5G NR n 26-2: 22.65dBm 5G NR n 41: 25.42dBm 5G NR n 66: 22.30dBm

	5G NR n 77: 25.89dBm 5G NR n 78: 25.69dBm
99% Occupied Bandwidth.....:	5G NR n 2: 18M1G7D 5G NR n 5: 18M6W7D 5G NR n 7: 18M0G7D 5G NR n 25: 18M1G7D 5G NR n 26-1: 9M31G7D 5G NR n 26-2: 19M0G7D 5G NR n 41: 96M7W7D 5G NR n 66: 18M1G7D 5G NR n 77: 97M9G7D 5G NR n 78: 97M9G7D
Type of Modulation.....:	BPSK, QPSK, 16QAM, 64QAM, 256QAM
Antenna Type.....:	FPC Antenna
Antenna Gain.....:	5G NR n 2: 0.3dBi 5G NR n 5: -0.1dBi 5G NR n 7: 0.88dBi 5G NR n 25: 0.3dBi 5G NR n 26-1: -1.17dBi 5G NR n 26-2: -0.1dBi 5G NR n 41: 0.88dBi 5G NR n 66: 0.78dBi 5G NR n 77: 3.13dBi 5G NR n 78: 1.22dBi
Rating(s).....:	Adapter Information: Model: HJ-FC001K7-US Input: AC 100-240V, 50/60Hz, 0.6A Output: DC 5.0V, 3.0A/DC 9.0V, 2.0A/DC 12.0V, 1.5A, 18.0W Rechargeable Li-ion Battery DC 3.8V

Note: The antenna gain listed in this report is provided by applicant, and the test laboratory is not responsible for this parameter.

1.2. Model(s) list

None.

Hotline: 400-6611-140 Tel: 86-755-27673339 Fax: 86-755-27673332 http://www.tct-lab.com

1.3. Emission Designator

5G NR n 2	BPSK		QPSK		16QAM		64QAM		256QAM	
BW (MHz)	Emission Designator (99%OBW)	Maxi. EIRP (W)	Emission Designator (99%OBW)	Max. EIRP (W)	Emission Designator (99%OBW)	Maxi. EIRP (W)	Emission Designator (99%OBW)	Max. EIRP (W)	Emission Designator (99%OBW)	Maxi. EIRP (W)
5	4M50G7D	0.243	4M50G7D	0.241	4M50W7D	0.237	4M50W7D	0.242	4M50W7D	0.245
10	9M00G7D	0.243	9M00G7D	0.236	9M00W7D	0.216	9M00W7D	0.215	9M00W7D	0.215
15	13M5G7D	0.210	13M5G7D	0.211	13M5W7D	0.210	13M5W7D	0.208	13M5W7D	0.213
20	18M1G7D	0.213	18M0G7D	0.212	18M0W7D	0.211	18M0W7D	0.211	18M1W7D	0.212

5G NR n 5	BPSK		QPSK		16QAM		64QAM		256QAM	
BW (MHz)	Emission Designator (99%OBW)	Maxi. ERP (W)	Emission Designator (99%OBW)	Max. ERP (W)	Emission Designator (99%OBW)	Maxi. ERP (W)	Emission Designator (99%OBW)	Max. ERP (W)	Emission Designator (99%OBW)	Maxi. ERP (W)
5	4M52G7D	0.133	4M52G7D	0.132	4M52W7D	0.126	4M52W7D	0.130	4M52W7D	0.132
10	9M03G7D	0.131	9M00G7D	0.132	9M00W7D	0.131	9M03W7D	0.131	9M00W7D	0.131
15	13M5G7D	0.130	13M5G7D	0.129	13M5W7D	0.129	13M5W7D	0.132	13M5W7D	0.128
20	17M9G7D	0.129	17M9G7D	0.129	17M9W7D	0.129	18M0W7D	0.129	18M6W7D	0.131

5G NR n 7	BPSK		QPSK		16QAM		64QAM		256QAM	
BW (MHz)	Emission Designator (99%OBW)	Maxi. EIRP (W)	Emission Designator (99%OBW)	Max. EIRP (W)	Emission Designator (99%OBW)	Maxi. EIRP (W)	Emission Designator (99%OBW)	Max. EIRP (W)	Emission Designator (99%OBW)	Maxi. EIRP (W)
5	4M52G7D	0.214	4M52G7D	0.213	4M52W7D	0.213	4M52W7D	0.212	4M52W7D	0.213
10	9M00G7D	0.214	9M00G7D	0.214	9M00W7D	0.214	9M00W7D	0.214	9M00W7D	0.214
15	13M5G7D	0.206	13M5G7D	0.205	13M5W7D	0.206	13M5W7D	0.206	13M5W7D	0.207
20	18M0G7D	0.209	18M0G7D	0.210	18M0W7D	0.209	18M0W7D	0.209	18M0W7D	0.210

5G NR n 25	BPSK		QPSK		16QAM		64QAM		256QAM	
BW (MHz)	Emission Designator (99%OBW)	Maxi. EIRP (W)	Emission Designator (99%OBW)	Max. EIRP (W)	Emission Designator (99%OBW)	Maxi. EIRP (W)	Emission Designator (99%OBW)	Max. EIRP (W)	Emission Designator (99%OBW)	Maxi. EIRP (W)
5	4M52G7D	0.187	4M59G7D	0.187	4M52W7D	0.187	4M50W7D	0.186	4M52W7D	0.187
10	9M00G7D	0.187	9M00G7D	0.187	9M06W7D	0.187	9M00W7D	0.187	9M06W7D	0.187
15	13M5G7D	0.180	13M5G7D	0.179	13M5W7D	0.180	13M5W7D	0.180	13M5W7D	0.181
20	18M0G7D	0.183	18M1G7D	0.184	18M0W7D	0.183	18M0W7D	0.183	18M1W7D	0.184

5G NR n 26-1	BPSK		QPSK		16QAM		64QAM		256QAM	
BW (MHz)	Emission Designator (99%OBW)	Maxi. ERP (W)	Emission Designator (99%OBW)	Max. ERP (W)	Emission Designator (99%OBW)	Maxi. ERP (W)	Emission Designator (99%OBW)	Max. ERP (W)	Emission Designator (99%OBW)	Maxi. ERP (W)
5	4M51G7D	0.090	4M51G7D	0.091	4M52W7D	0.091	4M52W7D	0.091	4M51W7D	0.084
10	8M97G7D	0.084	9M31G7D	0.083	9M31W7D	0.084	9M31W7D	0.084	9M31W7D	0.085

5G NR n 26-2	BPSK		QPSK		16QAM		64QAM		256QAM	
BW (MHz)	Emission Designator (99%OBW)	Maxi. ERP (W)	Emission Designator (99%OBW)	Max. ERP (W)	Emission Designator (99%OBW)	Maxi. ERP (W)	Emission Designator (99%OBW)	Max. ERP (W)	Emission Designator (99%OBW)	Maxi. ERP (W)
5	4M52G7D	0.109	4M52G7D	0.107	4M52W7D	0.109	4M51W7D	0.109	4M52W7D	0.108
10	8M99G7D	0.106	9M35G7D	0.106	9M37W7D	0.106	9M37W7D	0.107	9M35W7D	0.106
15	13M5G7D	0.109	14M2G7D	0.109	14M2W7D	0.109	14M2W7D	0.109	14M2W7D	0.109
20	18M0G7D	0.109	19M0G7D	0.108	19M0W7D	0.110	19M0W7D	0.106	19M0W7D	0.108

5G NR n 41	BPSK		QPSK		16QAM		64QAM		256QAM	
BW (MHz)	Emission Designator (99%OBW)	Maxi. EIRP (W)	Emission Designator (99%OBW)	Max. EIRP (W)	Emission Designator (99%OBW)	Maxi. EIRP (W)	Emission Designator (99%OBW)	Max. EIRP (W)	Emission Designator (99%OBW)	Maxi. EIRP (W)
20	17M9G7D	0.426	17M9G7D	0.427	17M9W7D	0.426	18M1W7D	0.426	17M9W7D	0.382
40	35M8G7D	0.394	35M8G7D	0.396	35M8W7D	0.399	35M9W7D	0.397	35M7W7D	0.398
50	46M0G7D	0.417	46M0G7D	0.416	46M0W7D	0.406	46M0W7D	0.394	46M2W7D	0.398
60	58M0G7D	0.406	58M4G7D	0.406	58M4W7D	0.407	58M2W7D	0.406	58M7W7D	0.404
80	77M3G7D	0.385	77M3G7D	0.386	77M3W7D	0.407	77M1W7D	0.416	77M7W7D	0.389
100	96M4G7D	0.394	96M1G7D	0.394	96M4W7D	0.395	96M4W7D	0.395	96M7W7D	0.394

5G NR n 66	BPSK		QPSK		16QAM		64QAM		256QAM	
BW (MHz)	Emission Designator (99%OBW)	Maxi. EIRP (W)	Emission Designator (99%OBW)	Max. EIRP (W)	Emission Designator (99%OBW)	Maxi. EIRP (W)	Emission Designator (99%OBW)	Max. EIRP (W)	Emission Designator (99%OBW)	Maxi. EIRP (W)
5	4M50G7D	0.199	4M50G7D	0.198	4M50W7D	0.198	4M50W7D	0.198	4M52W7D	0.203
10	9M03G7D	0.203	9M03G7D	0.202	9M00W7D	0.202	9M03W7D	0.202	9M03W7D	0.199
15	13M5G7D	0.199	13M5G7D	0.203	13M5W7D	0.198	13M5W7D	0.198	13M5W7D	0.192
20	18M0G7D	0.191	18M1G7D	0.192	18M0W7D	0.193	18M0W7D	0.193	18M1W7D	0.195

5G NR n 77	BPSK		QPSK		16QAM		64QAM		256QAM	
BW (MHz)	Emission Designator (99%OBW)	Maxi. EIRP (W)	Emission Designator (99%OBW)	Max. EIRP (W)	Emission Designator (99%OBW)	Maxi. EIRP (W)	Emission Designator (99%OBW)	Max. EIRP (W)	Emission Designator (99%OBW)	Maxi. EIRP (W)
20	18M1G7D	0.787	18M4G7D	0.793	18M5W7D	0.787	18M5W7D	0.798	18M4W7D	0.708
40	36M1G7D	0.708	38M3G7D	0.728	38M2W7D	0.724	38M3W7D	0.726	38M3W7D	0.710
60	58M5G7D	0.703	58M7G7D	0.698	58M6W7D	0.708	58M6W7D	0.698	58M7W7D	0.706
80	77M5G7D	0.716	78M0G7D	0.719	77M8W7D	0.716	78M0W7D	0.710	78M0W7D	0.711
100	96M7G7D	0.706	97M9G7D	0.701	97M9W7D	0.714	97M7W7D	0.711	97M5W7D	0.708

5G NR n 78	BPSK		QPSK		16QAM		64QAM		256QAM	
BW (MHz)	Emission Designator (99%OBW)	Maxi. EIRP (W)	Emission Designator (99%OBW)	Max. EIRP (W)	Emission Designator (99%OBW)	Maxi. EIRP (W)	Emission Designator (99%OBW)	Max. EIRP (W)	Emission Designator (99%OBW)	Maxi. EIRP (W)
20	18M0G7D	0.488	18M4G7D	0.488	18M4W7D	0.491	18M4W7D	0.490	18M3W7D	0.444
40	36M0G7D	0.451	38M1G7D	0.452	38M2W7D	0.439	38M1W7D	0.448	38M2W7D	0.439
50	46M1G7D	0.421	47M9G7D	0.422	47M8W7D	0.417	47M8W7D	0.419	47M8W7D	0.426
60	58M5G7D	0.410	58M5G7D	0.423	58M5W7D	0.419	58M4W7D	0.419	58M6W7D	0.419
70	64M8G7D	0.421	67M8G7D	0.415	68M0W7D	0.421	67M8W7D	0.421	68M0W7D	0.423
80	78M0G7D	0.422	78M0G7D	0.412	78M0W7D	0.421	78M0W7D	0.415	78M0W7D	0.421
90	87M6G7D	0.483	87M9G7D	0.482	87M9W7D	0.454	87M9W7D	0.471	88M1W7D	0.422
100	97M1G7D	0.416	97M9G7D	0.420	97M9W7D	0.417	97M9W7D	0.414	97M7W7D	0.423

1.4. Test Frequency

5G NR n 2(5MHz)		5G NR n 2(10MHz)	
Channel	Frequency (MHz)	Channel	Frequency (MHz)
370500	1852.5	371000	1855
376000	1880	376000	1880
381500	1907.5	381000	1905
5G NR n 2(15MHz)		5G NR n 2(20MHz)	
Channel	Frequency (MHz)	Channel	Frequency (MHz)
371500	1857.5	372000	1860
376000	1880	376000	1880
380500	1902.5	380000	1900

5G NR n 5(5MHz)		5G NR n 5(10MHz)	
Channel	Frequency (MHz)	Channel	Frequency (MHz)
165300	826.5	165800	829
167300	836.5	167300	836.5
169300	846.5	168800	844
5G NR n 5(15MHz)		5G NR n 5(20MHz)	
Channel	Frequency (MHz)	Channel	Frequency (MHz)
166300	831.5	166800	834
167300	836.5	167300	836.5
168300	841.5	167800	844

5G NR n 7(5MHz)		5G NR n 7(10MHz)	
Channel	Frequency (MHz)	Channel	Frequency (MHz)
500500	2502.5	501000	2505
507000	2535	507000	2535
513500	2567.5	513000	2565
5G NR n 7(15MHz)		5G NR n 7(20MHz)	
Channel	Frequency (MHz)	Channel	Frequency (MHz)
501500	2507.5	502000	2510
507000	2535	507000	2535
512500	2562.5	512000	2560

5G NR n 25(5MHz)		5G NR n 25(10MHz)	
Channel	Frequency (MHz)	Channel	Frequency (MHz)
370500	1852.5	371000	1855
376500	1882.5	376500	1882.5
382500	1912.5	382000	1910
5G NR n 25(15MHz)		5G NR n 25(20MHz)	
Channel	Frequency (MHz)	Channel	Frequency (MHz)
371500	1857.5	372000	1860
376500	1882.5	376500	1882.5
381500	1907.5	381000	1905

5G NR n 26-1(5MHz)		5G NR n 26-1(10MHz)	
Channel	Frequency (MHz)	Channel	Frequency (MHz)
163300	816.5	-	-
163800	819	163800	819
164300	821.5	-	-

5G NR n 26-2(5MHz)		5G NR n 26-2(10MHz)	
Channel	Frequency (MHz)	Channel	Frequency (MHz)
165300	826.5	165800	829
167300	836.5	167300	836.5
169300	846.5	168800	844
5G NR n 26-2(15MHz)		5G NR n 26-2(20MHz)	
Channel	Frequency (MHz)	Channel	Frequency (MHz)
166300	831.5	166800	834
167300	836.5	167300	836.5
168300	841.5	167800	839

5G NR n 41(20MHz)		5G NR n 41(40MHz)	
Channel	Frequency (MHz)	Channel	Frequency (MHz)
501204	2506.02	503202	2516.01
518598	2592.99	518598	2592.99
535998	2679.99	534000	2670
5G NR n 41(50MHz)		5G NR n 41(60MHz)	
Channel	Frequency (MHz)	Channel	Frequency (MHz)
504204	2521.02	505200	2526
518598	2592.99	518598	2592.99
532998	2664.99	531996	2659.98
5G NR n 41(80MHz)		5G NR n 41(100MHz)	
Channel	Frequency (MHz)	Channel	Frequency (MHz)
507204	2536.02	509202	2546.01
518598	2592.99	518598	2592.99
529998	2649.99	528000	2640

5G NR n 66(5MHz)		5G NR n 66(10MHz)	
Channel	Frequency (MHz)	Channel	Frequency (MHz)
342500	1712.5	343000	1715
349000	1745	349000	1745
355500	1777.5	355000	1775
5G NR n 66(15MHz)		5G NR n 66(20MHz)	
343500	1717.5	344000	1720
349000	1745	349000	1745
354500	1772.5	354000	1770

5G NR n 77(20MHz)		5G NR n 77(40MHz)	
Channel	Frequency (MHz)	Channel	Frequency (MHz)
647334	3710.01	648000	3720
656000	3840	656000	3840
664666	3969.99	664000	3960
5G NR n 77(60MHz)		5G NR n 77(80MHz)	
Channel	Frequency (MHz)	Channel	Frequency (MHz)
648668	3730.02	649334	3740.01
656000	3840	656000	3840
663332	3949.98	662666	3939.99
5G NR n 77(100MHz)		-	
Channel	Frequency (MHz)	-	-
650000	3750	-	-
656000	3840	-	-
662000	3930	-	-

5G NR n 78(20MHz)		5G NR n 78(40MHz)	
Channel	Frequency (MHz)	Channel	Frequency (MHz)
630668	3460.02	631334	3470.01
633334	3500.01	633334	3500.01
636000	3540	635332	3529.98
5G NR n 78(50MHz)		5G NR n 78(60MHz)	
Channel	Frequency (MHz)	Channel	Frequency (MHz)
631668	3475.02	632000	3480
633334	3500.01	633334	3500.01
635000	3525	634666	3519.99
5G NR n 78(70MHz)		5G NR n 78(80MHz)	
Channel	Frequency (MHz)	Channel	Frequency (MHz)
632334	3485.01	632668	3490.02
633334	3500.01	633334	3500.01
634332	3514.98	634000	3510
5G NR n 78(90MHz)		5G NR n 78(100MHz)	
Channel	Frequency (MHz)	Channel	Frequency (MHz)
633000	3495	-	-
633334	3500.01	633334	3500.01
633666	3504.99	-	-

2. Test Result Summary

Requirement	CFR 47 Section	Result
Conducted Output Power	§2.1046; §22.913; §24.232(c) §27.50(d); §27.50(h); §27.50(j); §27.50(k); §90.635	PASS
Peak-to-Average Ratio	§2.1046; §24.232(d) §27.50(d); §27.50(h); §27.50(j); §27.50(k)	PASS
Effective Radiated Power	§2.1046; §22.913; §90.635;	PASS
Equivalent Isotropic Radiated Power	§2.1046; §22.913; §24.232(c); §27.50(d); §27.50(h); §27.50(j); §27.50(k)	PASS
Occupied Bandwidth	§2.1049; §24.238(b); §27.53	PASS
Band Edge	§2.1051; §22.917(a); §24.238(a) §27.53(h); §27.53(i); §27.53(m); §27.53(n); §90.691(a)	PASS
Conducted Spurious Emission	§2.1051; §22.917(a); §24.238(a) §27.53(h); §27.53(i); §27.53(m); §27.53(n); §90.691(a)	PASS
Field Strength of Spurious Radiation	§2.1051; §22.917(a); §24.238(a) §27.53(h); §27.53(i); §27.53(m); §27.53(n); §90.691(a)	PASS
Frequency Stability for Temperature & Voltage	§2.1055; §22.355; §24.235; §27.54; §90.213	PASS

Note:

1. PASS: Test item meets the requirement.

2. Fail: Test item does not meet the requirement.

3. N/A: Test case does not apply to the test object.

4. The test result judgment is decided by the limit of test standard.

Hotline: 400-6611-140 Tel: 86-755-27673339 Fax: 86-755-27673332 http://www.tct-lab.com

3. General Information

3.1. Test environment and mode

Operating Environment:	
Temperature:	25.0 °C
Humidity:	56 % RH
Atmospheric Pressure:	1010 mbar
Remark: This product has a built-in rechargeable battery, so in an independent test, the EUT battery was fully-charged.	

Antenna port conducted and radiated test items were performed according to KDB 971168 D01 Power Meas License Digital Systems v03r01 with maximum output power. Radiated measurements were performed with rotating EUT in different three orthogonal test planes to find the maximum emission. The sample was placed 0.8m/1.5m above the ground plane of 3m chamber. Measurements in both horizontal and vertical polarities were performed. During the test, each emission was maximized by: having the EUT continuously working, investigated all operating modes, rotated about all 3 axis (X, Y & Z) and considered typical configuration to obtain worst position, manipulating interconnecting cables, rotating the turntable, varying antenna height from 1m to 4m in both horizontal and vertical polarization. The emissions worst-case are shown in Test Results of the following pages.

Test Items	SCS	Band	Test Bandwidth (MHz)	Modulation					RB #			Test Channel		
				BPSK	QPSK	16QAM	64QAM	256QAM	1	Half	Full	L	M	H
Max. Output Power	15	2	5/10/15/20	v	v	v	v	v	v	v	v	v	v	v
	15	5	5/10/15/20	v	v	v	v	v	v	v	v	v	v	v
	15	7	5/10/15/20	v	v	v	v	v	v	v	v	v	v	v
	15	25	5/10/15/20	v	v	v	v	v	v	v	v	v	v	v
	15	26-1	5/10	v	v	v	v	v	v	v	v	v	v	v
	15	26-2	5/10/15/20	v	v	v	v	v	v	v	v	v	v	v
	30	41	20/40/50/60/80/100	v	v	v	v	v	v	v	v	v	v	v
	15	66	5/10/15/20	v	v	v	v	v	v	v	v	v	v	v
	30	77	20/40/60/80/100	v	v	v	v	v	v	v	v	v	v	v
	30	78	20/40/50/60/70/80/90/100	v	v	v	v	v	v	v	v	v	v	v
E.R.P./ E.I.R.P.	15	2	5/10/15/20	v	v	v	v	v	v	v	v	v	v	v
	15	5	5/10/15/20	v	v	v	v	v	v	v	v	v	v	v
	15	7	5/10/15/20	v	v	v	v	v	v	v	v	v	v	v
	15	25	5/10/15/20	v	v	v	v	v	v	v	v	v	v	v
	15	26-1	5/10	v	v	v	v	v	v	v	v	v	v	v
	15	26-2	5/10/15/20	v	v	v	v	v	v	v	v	v	v	v
	30	41	20/40/50/60/80/100	v	v	v	v	v	v	v	v	v	v	v

	15	66	5/10/15/20	v	v	v	v	v	v	v	v	v	v	v
	30	77	20/40/60/80/100	v	v	v	v	v	v	v	v	v	v	v
	30	78	20/40/50/60/70/80/90/100	v	v	v	v	v	v	v	v	v	v	v
Peak-to-Average Ratio	15	2	5/10/15/20	v	v	v	v	v	-	-	v	v	v	v
	15	5	5/10/15/20	v	v	v	v	v	-	-	v	v	v	v
	15	7	5/10/15/20	v	v	v	v	v	-	-	v	v	v	v
	15	25	5/10/15/20	v	v	v	v	v	-	-	v	v	v	v
	15	26-1	5/10	v	v	v	v	v	-	-	v	v	v	v
	15	26-2	5/10/15/20	v	v	v	v	v	-	-	v	v	v	v
	30	41	20/40/50/60/80/100	v	v	v	v	v	-	-	v	v	v	v
	15	66	5/10/15/20	v	v	v	v	v	-	-	v	v	v	v
	30	77	20/40/60/80/100	v	v	v	v	v	-	-	v	v	v	v
	30	78	20/40/50/60/70/80/90/100	v	v	v	v	v	-	-	v	v	v	v
26dB and 99% Bandwidth	15	2	5/10/15/20	v	v	v	v	v	-	-	v	v	v	v
	15	5	5/10/15/20	v	v	v	v	v	-	-	v	v	v	v
	15	7	5/10/15/20	v	v	v	v	v	-	-	v	v	v	v
	15	25	5/10/15/20	v	v	v	v	v	-	-	v	v	v	v
	15	26-1	5/10	v	v	v	v	v	-	-	v	v	v	v
	15	26-2	5/10/15/20	v	v	v	v	v	-	-	v	v	v	v
	30	41	20/40/50/60/80/100	v	v	v	v	v	-	-	v	v	v	v
	15	66	5/10/15/20	v	v	v	v	v	-	-	v	v	v	v
	30	77	20/40/60/80/100	v	v	v	v	v	-	-	v	v	v	v
	30	78	20/40/50/60/70/80/90/100	v	v	v	v	v	-	-	v	v	v	v
Conducted Band Edge	15	2	5/10/15/20	-	v	-	-	-	v	-	v	v	-	v
	15	5	5/10/15/20	-	v	-	-	-	v	-	v	v	-	v
	15	7	5/10/15/20	-	v	-	-	-	v	-	v	v	-	v
	15	25	5/10/15/20	-	v	-	-	-	v	-	v	v	-	v
	15	26-1	5/10	-	v	-	-	-	v	-	v	v	-	v
	15	26-2	5/10/15/20	-	v	-	-	-	v	-	v	v	-	v
	30	41	20/40/50/60/80/100	-	v	-	-	-	v	-	v	v	-	v
	15	66	5/10/15/20	-	v	-	-	-	v	-	v	v	-	v
	30	77	20/40/60/80/100	-	v	-	-	-	v	-	v	v	-	v
	30	78	20/40/50/60/70/80/90/100	-	v	-	-	-	v	-	v	v	-	v
Conducted Spurious Emission	15	2	5/10/15/20	-	v	-	-	-	v	-	v	v	v	v
	15	5	5/10/15/20	-	v	-	-	-	v	-	v	v	v	v
	15	7	5/10/15/20	-	v	-	-	-	v	-	v	v	v	v
	15	25	5/10/15/20	-	v	-	-	-	v	-	v	v	v	v

	15	26-1	5/10	-	v	-	-	-	v	-	v	v	v	v
	15	26-2	5/10/15/20	-	v	-	-	-	v	-	v	v	v	v
	30	41	20/40/50/60/80/100	-	v	-	-	-	v	-	v	v	v	v
	15	66	5/10/15/20	-	v	-	-	-	v	-	v	v	v	v
	30	77	20/40/60/80/100	-	v	-	-	-	v	-	v	v	v	v
	30	78	20/40/50/60/70/80/90/100	-	v	-	-	-	v	-	v	v	v	v
Frequency Stability	15	2	5/10/15/20	v	-	-	-	-	-	-	v	v	v	v
	15	5	5/10/15/20	v	-	-	-	-	-	-	v	v	v	v
	15	7	5/10/15/20	v	-	-	-	-	-	-	v	v	v	v
	15	25	5/10/15/20	v	-	-	-	-	-	-	v	v	v	v
	15	26-1	5/10	v	-	-	-	-	-	-	v	v	v	v
	15	26-2	5/10/15/20	v	-	-	-	-	-	-	v	v	v	v
	30	41	20/40/50/60/80/100	v	-	-	-	-	-	-	v	v	v	v
	15	66	5/10/15/20	v	-	-	-	-	-	-	v	v	v	v
	30	77	20/40/60/80/100	v	-	-	-	-	-	-	v	v	v	v
	30	78	20/40/50/60/70/80/90/100	v	-	-	-	-	-	-	v	v	v	v
Radiated Spurious Emission	15	2	20	v	-	-	-	-	-	-	v	v	v	v
	15	5	20	v	-	-	-	-	-	-	v	v	v	v
	15	7	20	v	-	-	-	-	-	-	v	v	v	v
	15	25	20	v	-	-	-	-	-	-	v	v	v	v
	15	26-1	10	v	-	-	-	-	-	-	v	v	v	v
	15	26-2	20	v	-	-	-	-	-	-	v	v	v	v
	30	41	100	v	-	-	-	-	-	-	v	v	v	v
	15	66	20	v	-	-	-	-	-	-	v	v	v	v
	30	77	100	v	-	-	-	-	-	-	v	v	v	v
	30	78	100	v	-	-	-	-	-	-	v	v	v	v
Note	1. The mark "**v**" means that this configuration is chosen for testing 2. The mark "-" means that this bandwidth is not supported.													

3.2. Description of Support Units

The EUT has been tested as an independent unit together with other necessary accessories or support units. The following support units or accessories were used to form a representative test configuration during the tests.

Equipment	Model No.	Serial No.	FCC ID	Trade Name
/	/	/	/	/

Note:

1. All the equipment/cables were placed in the worst-case configuration to maximize the emission during the test.

2. Grounding was established in accordance with the manufacturer's requirements and conditions for the intended use.

3.3. Configuration of Tested System

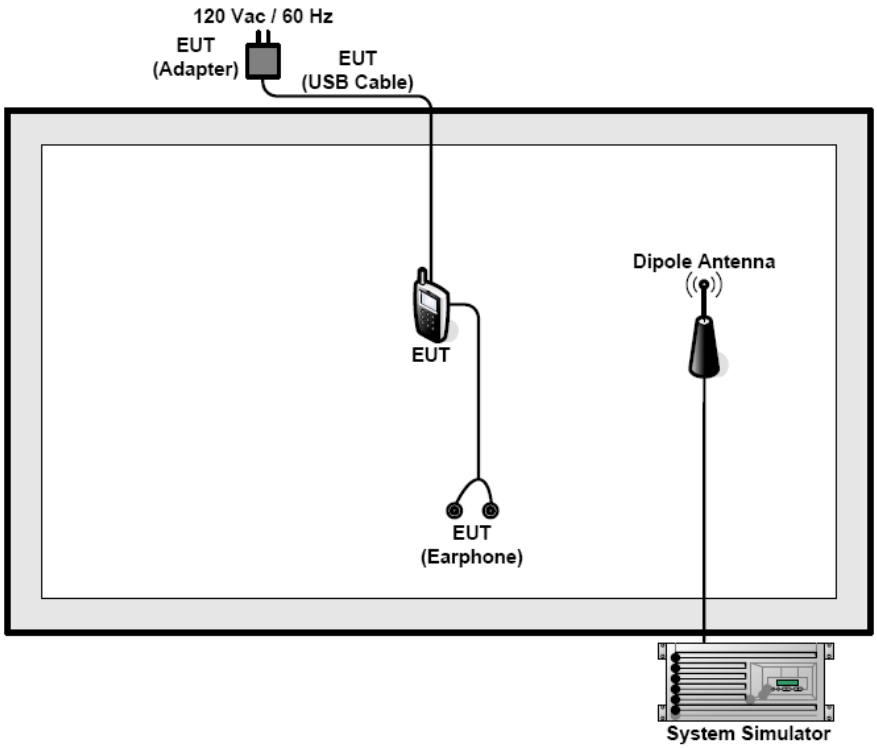

3.4. Measurement Results Explanation Example

For all conducted test items:

The offset level is set in the spectrum analyzer to compensate the RF cable loss and attenuator factor between RF conducted output port and spectrum analyzer. With the offset compensation, the spectrum analyzer reading level will be exactly the RF output level. The spectrum analyzer offset is derived from RF cable loss and attenuator factor.

Offset = RF cable loss + attenuator factor.

4. Facilities and Accreditations

4.1. Facilities

The test facility is recognized, certified, or accredited by the following organizations:

- FCC - Registration No.: 645098
  SHENZHEN TONGCE TESTING LAB
  Designation Number: CN1205
  The testing lab has been registered and fully described in a report with the (FCC) Federal Communications Commission. The acceptance letter from the FCC is maintained in our files.
- IC - Registration No.: 10668A
  SHENZHEN TONGCE TESTING LAB
  CAB identifier: CN0031
  The testing lab has been registered by Innovation, Science and Economic Development Canada for radio equipment testing.

4.2. Location

SHENZHEN TONGCE TESTING LAB
Address: 2101 & 2201, Zhenchang Factory, Renshan Industrial Zone, Fuhai Subdistrict, Bao'an District, Shenzhen, Guangdong, 518103, People's Republic of China
TEL: 86-755-27673339

4.3. Measurement Uncertainty

The reported uncertainty of measurement y ± U, where expended uncertainty U is based on a standard uncertainty multiplied by a coverage factor of k=2, providing a level of confidence of approximately 95 %.

No.	Item	MU
1	Conducted Emission	±3.32 dB
2	RF power, conducted	±1.08 dB
3	Spurious emissions, conducted	±2.94 dB
4	All emissions, radiated(<1 GHz)	±4.86 dB
5	All emissions, radiated(1 GHz - 18 GHz)	±4.91 dB
6	All emissions, radiated(18 GHz- 40 GHz)	±4.36 dB

5. Test Results and Measurement Data

5.1. Effective Radiated Power and Effective Isotropic Radiated Power Measurement

5.1.1. Test Specification

Test Requirement:	FCC part 22.913, FCC part 24.232(c), FCC part 27.50(d), FCC part 27.50(h), FCC part 27.50(j), FCC part 27.50(k), FCC part 90.635
Test Method:	FCC part 2.1046
Limit:	5G NR n 2/n 25: 2W 5G NR n 5/n 26: 7W 5G NR n 7/n 41: 2W 5G NR n 66: 1W 5G NR n 77/n 78: 3W
Test Setup:	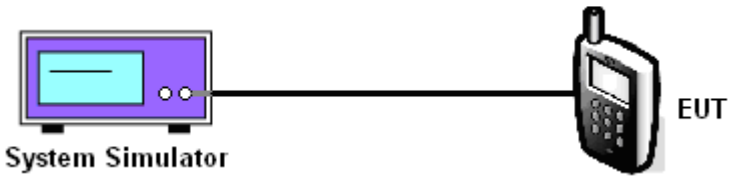
Test Procedure:	1. The transmitter output port was connected to the system simulator. 2. Set EUT at maximum power through system simulator. 3. Select lowest, middle, highest channels for each band and different modulation. 4. Measure and record the power level from the system simulator. 5. Calculate the ERP and EIRP The relevant equation for determining the ERP or EIRP from the conducted RF output power measured using the guidance provided above is: ERP or EIRP = $P_{Meas} + G_T - L_C$ where: ERP or EIRP = effective radiated power or equivalent isotropically radiated power, respectively (expressed in the same units as P Meas , typically dBW or dBm); P_{Meas} = measured transmitter output power or PSD, in dBm or dBW; G_T = gain of the transmitting antenna, in dBd (ERP) or dBi (EIRP); L_C = signal attenuation in the connecting cable

	between the transmitter and antenna, in dB. *Note: For personal/portable radios utilizing an integral antenna, the factor L C is typically negligible. However, in a fixed station transmit system that utilizes a long cable run between the transmitter and the transmitting antenna, this factor can be significant.*
Test Result:	PASS

5.1.2. Test Instruments

Equipment	Manufacturer	Model	Serial Number	Calibration Due
Wireless communication test platform	Anritsu	MT8000A	6262208369	Jan. 31, 2025
Radio communication analyzer	Anritsu	MT8821C	6262192286	Jan. 31, 2025
Spectrum Analyzer	R&S	FSV40-N	102188	Jan. 31, 2025

5.2. Peak to Average Ratio

5.2.1. Test Specification

Test Requirement:	FCC part 22.913, FCC part 24.232(d), FCC part 27.50(d), FCC part 27.50(h), FCC part 27.50(j), FCC part 27.50(k), FCC part 90.635
Test Method:	FCC KDB 971168 D01v03r01
Limit:	The peak-to-average ratio (PAR) of the transmission may not exceed 13 dB.
Test Setup:	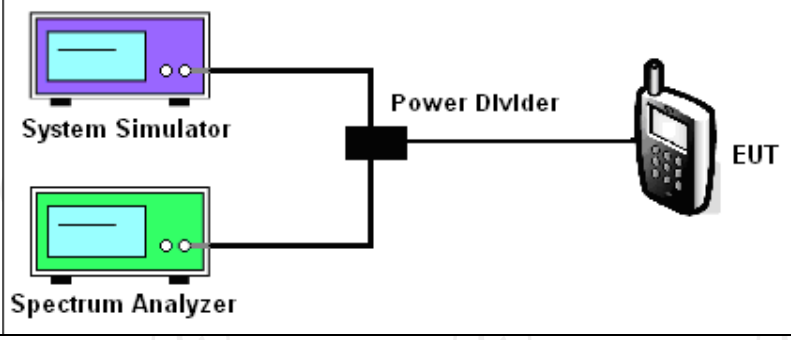
Test Procedure:	1. The testing follows FCC KDB 971168 D01v03r01 Section 5.7.1. 2. The EUT was connected to spectrum analyzer and system simulator via a power divider. 3. Set EUT to transmit at maximum output power. 4. Set the CCDF (Complementary Cumulative Distribution Function) option of the spectrum analyzer. Record the maximum PAPR level associated with a probability of 0.1%.
Test Result:	PASS

5.2.2. Test Instruments

Equipment	Manufacturer	Model	Serial Number	Calibration Due
Wireless communication test platform	Anritsu	MT8000A	6262208369	Jan. 31, 2025
Radio communication analyzer	Anritsu	MT8821C	6262192286	Jan. 31, 2025
Spectrum Analyzer	R&S	FSV40-N	102188	Jan. 31, 2025
Test software	MW	MTS 8200 NR	/	/

5.3. 99% Occupied Bandwidth and 26dB Bandwidth Measurement

5.3.1. Test Specification

Test Requirement:	FCC part 27.53 and FCC part 24.238(b)
Test Method:	FCC part 2.1049
Limit:	N/A
Test Setup:	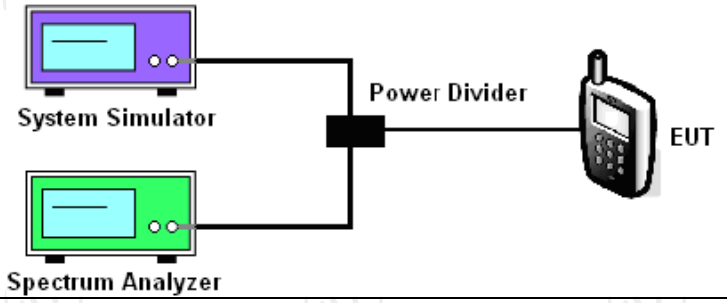
Test Procedure:	1. The testing follows FCC KDB 971168 D01v03r01 Section 4.2. 2. The EUT was connected to the spectrum analyzer and system simulator via a power divider. 3. The RF output of the EUT was connected to the spectrum analyzer by RF cable and attenuator. The path loss was compensated to the results for each measurement. 4. The 99% occupied bandwidth were measured, set RBW= 1% of OBW, VBW= 3*RBW, sample detector, trace maximum hold. 5. The 26dB bandwidth were measured, set RBW= 1% of EBW, VBW= 3*RBW, peak detector, trace maximum hold.
Test Result:	PASS

5.3.2. Test Instruments

Equipment	Manufacturer	Model	Serial Number	Calibration Due
Wireless communication test platform	Anritsu	MT8000A	6262208369	Jan. 31, 2025
Radio communication analyzer	Anritsu	MT8821C	6262192286	Jan. 31, 2025
Spectrum Analyzer	R&S	FSV40-N	102188	Jan. 31, 2025
Test software	MW	MTS 8200 NR	/	/

5.4. Band Edge and Conducted Spurious Emission Measurement

5.4.1. Test Specification

Test Requirement:	FCC part 22.917(a), FCC part 24.238(a), FCC part 27.53(h), FCC part 27.53(i), FCC part 27.53(m), FCC part 27.53(n), FCC part 90.691(a)
Test Method:	FCC part2.1051
Limit:	For 5G NR n 2, 5, 25, 26, 66, 77, 78: -13dBm; For 5G NR n 7, 41: the power of any unwanted emissions measured as above shall be attenuated (in dB) below the transmitter power, P (dBW), by at least: (i) 40 + 10 log10 p from the channel edges to 5 MHz away (ii) 43 + 10 log10 p between 5 MHz and X MHz from the channel edges, and (iii) 55 + 10 log10 p at X MHz and beyond from the channel edges. In addition, the attenuation shall not be less than 43 + 10 log10 p on all frequencies between 2490.5 MHz and 2496 MHz, and 55 + 10 log10 p at or below 2490.5 MHz.
Test Setup:	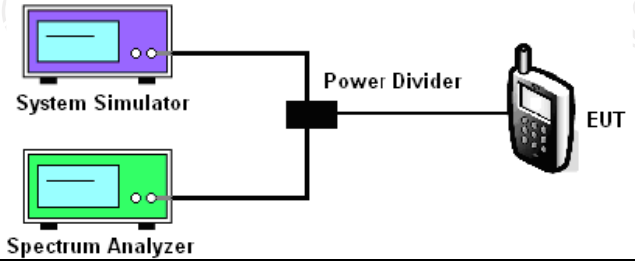
Test Procedure:	1. The testing follows FCC KDB 971168 D01v03r01 Section 6.0. 2. The EUT was connected to the spectrum analyzer and system simulator via a power divider. 3. The RF output of EUT was connected to the spectrum analyzer by an RF cable and attenuator. The path loss was compensated to the results for each measurement. 4. The band edges of low and high channels for the highest RF powers were measured. 5. The conducted spurious emission for the whole frequency range was taken. 6. The RF fundamental frequency should be excluded against the limit line in the operating frequency band.
Test Result:	PASS

5.4.2. Test Instruments

Equipment	Manufacturer	Model	Serial Number	Calibration Due
Wireless communication test platform	Anritsu	MT8000A	6262208369	Jan. 31, 2025
Radio communication analyzer	Anritsu	MT8821C	6262192286	Jan. 31, 2025
Spectrum Analyzer	R&S	FSV40-N	102188	Jan. 31, 2025
Test software	MW	MTS 8200 NR	/	/

5.5. Field Strength of Spurious Radiation Measurement

5.5.1. Test Specification

Test Requirement:	FCC part 27.53(g), FCC part 27.53(h), FCC part 27.53(m)(4), FCC part 22.917(a), 24.238(b)
Test Method:	FCC part 2.1053
Limit:	For 5G NR n 2, 5, 25, 26, 66, 77, 78: -13dBm; For 5G NR n 7, 41: -25dBm
Test setup:	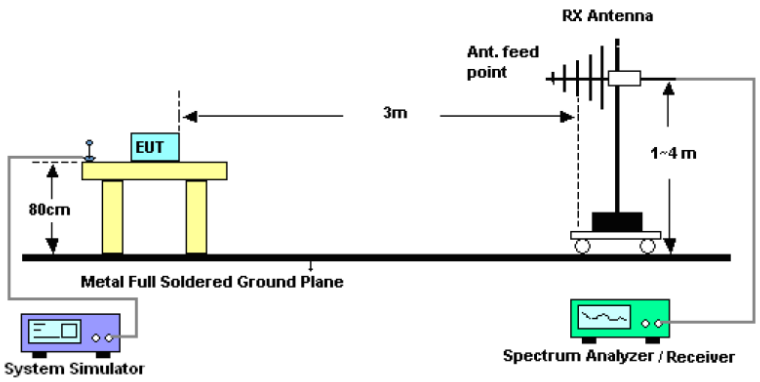 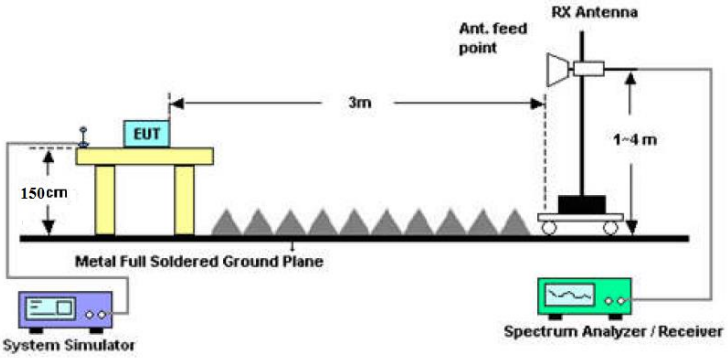
Test Procedure:	1. The testing follows FCC KDB 971168 D01v03r01 Section 5.8 and ANSI / TIA-603-D-2010Section 2.2.12. 2. The EUT was placed on a rotatable wooden table 0.8 meters above the ground. 3. The EUT was set 3 meters from the receiving antenna, which was mounted on the antenna tower. 4. The table was rotated 360 degrees to determine the position of the highest spurious emission. 5. The height of the receiving antenna is varied between one meter and four meters to search for the maximum spurious emission for both horizontal and vertical polarizations. 6. Make the measurement with the spectrum analyzer's RBW = 1MHz, VBW = 3MHz, taking record of maximum spurious emission.

	7. A horn antenna was substituted in place of the EUT and was driven by a signal generator. 8. Tune the output power of signal generator to the same emission level with EUT maximum spurious emission. 9. Taking the record of output power at antenna port. 10. Repeat step 7 to step 8 for another polarization. 11. EIRP (dBm) = S.G. Power – Tx Cable Loss + Tx Antenna Gain 12. ERP (dBm) = EIRP - 2.15 13. The RF fundamental frequency should be excluded against the limit line in the operating frequency band.
Test results:	PASS
Remark:	All modulations have been tested, but only the worst modulation show in this test item.

5.5.2. Test Instruments

Radiated Emission Test Site (966)				
Name of Equipment	**Manufacturer**	**Model**	**Serial Number**	**Calibration Due**
Wideband Radio Communication Tester	R&S	CMW500	137557	Jan. 31, 2025
Spectrum Analyzer	R&S	FSQ40	200061	Jun. 26, 2025
Signal Generator	Agilent	N5173B	MY58108823	Jan. 31, 2025
Broadband Antenna	Schwarzbeck	VULB9163	340	Jun. 28, 2025
Horn Antenna	Schwarzbeck	BBHA 9120D	631	Jun. 28, 2025
Broadband Antenna	Schwarzbeck	VULB9163	412	Jun. 28, 2025
Horn Antenna	Schwarzbeck	BBHA 9120D	1201	Jun. 28, 2025
Horn Antenna	Schwarzbeck	BBHA 9170	00956	Feb. 02, 2025
Coaxial cable	SKET	RE-03-D	/	Jun. 26, 2025
Coaxial cable	SKET	RE-03-M	/	Jun. 26, 2025
Coaxial cable	SKET	RE-03-L	/	Jun. 26, 2025
Coaxial cable	SKET	RE-04-D	/	Jun. 26, 2025
Coaxial cable	SKET	RE-04-M	/	Jun. 26, 2025
Coaxial cable	SKET	RE-04-L	/	Jun. 26, 2025
Antenna Mast	Keleto	RE-AM	/	/
EMI Test Software	EZ_EMC	FA-03A2 RE+	1.1.4.2	/

5.5.3. Test Data

Frequency Range (9 kHz-30MHz)

Frequency (MHz)	Level@3m (dBμV/m)	Limit@3m (dBμV/m)
--	--	--
--	--	--
--	--	--
--	--	--

Note: *1. Emission Level=Reading+ Cable loss + Antenna factor-Amp factor*

2. The emission levels are 20 dB below the limit value, which are not reported. It is deemed to comply with the requirement

Band	n 2(BPSK, 20MHz)	Test channel:	Lowest
Test mode:		Temperature:	25°C
		Relative Humidity:	56%

Note: Spurious emissions within 30-1000MHz were found more than 20dB below limit line.

Frequency (MHz)	Spurious Emission				Limit (dBm)	Result
	Polarization	Level (dBm)	Correction Factor (dB)	Spurious emissions (dBm)		
3720.00	Vertical	-42.15	1.05	-41.10	-13.00	PASS
5580.00	V	-46.88	6.98	-39.90		
7440.00	V	-62.48	10.40	-52.08		
3720.00	Horizontal	-42.27	2.08	-40.19		
5580.00	H	-48.59	7.46	-41.13		
7440.00	H	-61.31	10.00	-51.31		

Band	n 2(BPSK, 20MHz)	Test channel:	Middle
Test mode:		Temperature:	25°C
		Relative Humidity:	56%

Note: Spurious emissions within 30-1000MHz were found more than 20dB below limit line.

Frequency (MHz)	Spurious Emission				Limit (dBm)	Result
	Polarization	Level (dBm)	Correction Factor (dB)	Spurious emissions (dBm)		
3760.00	Vertical	-44.45	1.32	-43.13	-13.00	PASS
5640.00	V	-56.39	7.21	-49.18		
7520.00	V	-64.82	10.43	-54.39		
3760.00	Horizontal	-42.41	2.48	-39.93		
5640.00	H	-48.47	7.63	-40.84		
7520.00	H	-63.23	10.03	-53.20		

Band	n 2(BPSK, 20MHz)	Test channel:	Highest
Test mode:		Temperature:	25°C
		Relative Humidity:	56%

Note: Spurious emissions within 30-1000MHz were found more than 20dB below limit line.

Frequency (MHz)	Spurious Emission				Limit (dBm)	Result
	Polarization	Level (dBm)	Correction Factor (dB)	Spurious emissions (dBm)		
3800.00	Vertical	-44.94	1.59	-43.35	-13.00	PASS
5700.00	V	-54.07	7.43	-46.64		
7600.00	V	-62.74	10.53	-52.21		
3800.00	Horizontal	-40.25	2.88	-37.37		
5700.00	H	-48.59	7.81	-40.78		
7600.00	H	-63.05	10.23	-52.82		

Band					Test channel:	Lowest
Test mode:	n 5(BPSK, 20MHz)				Temperature:	25°C
					Relative Humidity:	56%
Note: Spurious emissions within 30-1000MHz were found more than 20dB below limit line.						
Frequency (MHz)	Spurious Emission				Limit (dBm)	Result
	Polarization	Level (dBm)	Correction Factor (dB)	Spurious emissions (dBm)		
1668.00	Vertical	-42.92	-6.46	-49.38	-13.00	PASS
2502.00	V	-49.67	-2.78	-52.45		
3336.00	V	-51.66	-0.48	-52.14		
1668.00	Horizontal	-42.24	-6.31	-48.55		
2502.00	H	-49.18	-2.90	-52.08		
3336.00	H	-50.30	-0.10	-50.40		

Band					Test channel:	Middle
Test mode:	n 5(BPSK, 20MHz)				Temperature:	25°C
					Relative Humidity:	56%
Note: Spurious emissions within 30-1000MHz were found more than 20dB below limit line.						
Frequency (MHz)	Spurious Emission				Limit (dBm)	Result
	Polarization	Level (dBm)	Correction Factor (dB)	Spurious emissions (dBm)		
1673.00	Vertical	-45.99	-6.46	-52.45	-13.00	PASS
2509.50	V	-49.18	-2.75	-51.93		
3346.00	V	-52.03	-0.47	-52.50		
1673.00	Horizontal	-40.11	-6.32	-46.43		
2509.50	H	-49.51	-2.86	-52.37		
3346.00	H	-53.92	-0.10	-54.02		

Band					Test channel:	Highest
Test mode:	n 5(BPSK, 20MHz)				Temperature:	25°C
					Relative Humidity:	56%
Note: Spurious emissions within 30-1000MHz were found more than 20dB below limit line.						
Frequency (MHz)	Spurious Emission				Limit (dBm)	Result
	Polarization	Level (dBm)	Correction Factor (dB)	Spurious emissions (dBm)		
1688.00	Vertical	-45.57	-6.45	-52.02	-13.00	PASS
2532.00	V	-48.95	-2.65	-51.60		
3376.00	V	-53.36	-0.47	-53.83		
1688.00	Horizontal	-41.74	-6.34	-48.08		
2532.00	H	-49.96	-2.73	-52.69		
3376.00	H	-54.54	-0.10	-54.64		

Band	n 7(BPSK, 20MHz)	Test channel:	Lowest
Test mode:		Temperature:	25°C
		Relative Humidity:	56%

Note: Spurious emissions within 30-1000MHz were found more than 20dB below limit line.

Frequency (MHz)	Spurious Emission				Limit (dBm)	Result
	Polarization	Level (dBm)	Correction Factor (dB)	Spurious emissions (dBm)		
5020.00	Vertical	-44.92	5.93	-38.99	-25.00	PASS
7530.00	V	-47.87	10.45	-37.42		
10040.00	V	-64.17	14.82	-49.35		
5020.00	Horizontal	-38.59	6.33	-32.26		
7530.00	H	-47.22	10.06	-37.16		
10040.00	H	-59.94	14.48	-45.46		

Band	n 7(BPSK, 20MHz)	Test channel:	Middle
Test mode:		Temperature:	25°C
		Relative Humidity:	56%

Note: Spurious emissions within 30-1000MHz were found more than 20dB below limit line.

Frequency (MHz)	Spurious Emission				Limit (dBm)	Result
	Polarization	Level (dBm)	Correction Factor (dB)	Spurious emissions (dBm)		
5070.00	Vertical	-44.35	6.01	-38.34	-25.00	PASS
7605.00	V	-55.46	10.54	-44.92		
10140.00	V	-62.35	14.89	-47.46		
5070.00	Horizontal	-40.24	6.42	-33.82		
7605.00	H	-48.31	10.24	-38.07		
10140.00	H	-61.60	14.65	-46.95		

Band	n 7(BPSK, 20MHz)	Test channel:	Highest
Test mode:		Temperature:	25°C
		Relative Humidity:	56%

Note: Spurious emissions within 30-1000MHz were found more than 20dB below limit line.

Frequency (MHz)	Spurious Emission				Limit (dBm)	Result
	Polarization	Level (dBm)	Correction Factor (dB)	Spurious emissions (dBm)		
5120.00	Vertical	-45.72	6.09	-39.63	-25.00	PASS
7680.00	V	-53.93	10.63	-43.30		
10240.00	V	-61.11	14.95	-46.16		
5120.00	Horizontal	-41.73	6.52	-35.21		
7680.00	H	-49.80	10.43	-39.37		
10240.00	H	-64.02	14.82	-49.20		

Band	n 25(BPSK, 20MHz)	Test channel:	Lowest
Test mode:		Temperature:	25°C
		Relative Humidity:	56%

Note: Spurious emissions within 30-1000MHz were found more than 20dB below limit line.

Frequency (MHz)	Spurious Emission				Limit (dBm)	Result
	Polarization	Level (dBm)	Correction Factor (dB)	Spurious emissions (dBm)		
3720.00	Vertical	-42.59	1.05	-41.54	-13.00	PASS
5580.00	V	-49.83	6.98	-42.85		
7440.00	V	-51.53	10.40	-41.13		
3720.00	Horizontal	-42.49	2.08	-40.41		
5580.00	H	-48.71	7.46	-41.25		
7440.00	H	-50.37	10.00	-40.37		

Band	n 25(BPSK, 20MHz)	Test channel:	Middle
Test mode:		Temperature:	25°C
		Relative Humidity:	56%

Note: Spurious emissions within 30-1000MHz were found more than 20dB below limit line.

Frequency (MHz)	Spurious Emission				Limit (dBm)	Result
	Polarization	Level (dBm)	Correction Factor (dB)	Spurious emissions (dBm)		
3765.00	Vertical	-46.08	1.35	-44.73	-13.00	PASS
5647.50	V	-48.71	7.23	-41.48		
7530.00	V	-51.80	10.45	-41.35		
3765.00	Horizontal	-40.31	2.53	-37.78		
5647.50	H	-50.07	7.65	-42.42		
7530.00	H	-53.32	10.06	-43.26		

Band	n 25(BPSK, 20MHz)	Test channel:	Highest
Test mode:		Temperature:	25°C
		Relative Humidity:	56%

Note: Spurious emissions within 30-1000MHz were found more than 20dB below limit line.

Frequency (MHz)	Spurious Emission				Limit (dBm)	Result
	Polarization	Level (dBm)	Correction Factor (dB)	Spurious emissions (dBm)		
3810.00	Vertical	-44.98	1.66	-43.32	-13.00	PASS
5850.00	V	-49.26	7.49	-41.77		
7800.00	V	-53.25	10.74	-42.51		
3810.00	Horizontal	-41.24	2.98	-38.26		
5850.00	H	-49.55	7.85	-41.70		
7800.00	H	-55.27	10.68	-44.59		

Band	n 26-1 (BPSK, 5MHz)	Test channel:	Lowest
Test mode:		Temperature:	25°C
		Relative Humidity:	56%

Note: Spurious emissions within 30-1000MHz were found more than 20dB below limit line.

Frequency (MHz)	Spurious Emission				Limit (dBm)	Result
	Polarization	Level (dBm)	Correction Factor (dB)	Spurious emissions (dBm)		
1633.00	Vertical	-33.02	-6.48	-39.50	-13.00	PASS
2449.50	V	-36.18	-2.97	-39.15		
3266.00	V	-37.59	-0.49	-38.08		
1633.00	Horizontal	-34.55	-6.26	-40.81		
2449.50	H	-37.33	-3.05	-40.38		
3266.00	H	-38.85	-0.10	-38.95		

Band	n 26-1 (BPSK, 5MHz)	Test channel:	Middle
Test mode:		Temperature:	25°C
		Relative Humidity:	56%

Note: Spurious emissions within 30-1000MHz were found more than 20dB below limit line.

Frequency (MHz)	Spurious Emission				Limit (dBm)	Result
	Polarization	Level (dBm)	Correction Factor (dB)	Spurious emissions (dBm)		
1638.00	Vertical	-34.32	-6.48	-40.80	-13.00	PASS
2457.00	V	-36.13	-2.95	-39.08		
3276.00	V	-41.86	-0.49	-42.35		
1638.00	Horizontal	-31.96	-6.27	-38.23		
2457.00	H	-37.31	-3.03	-40.34		
3276.00	H	-43.46	-0.10	-43.56		

Band	n 26-1 (BPSK, 5MHz)	Test channel:	Highest
Test mode:		Temperature:	25°C
		Relative Humidity:	56%

Note: Spurious emissions within 30-1000MHz were found more than 20dB below limit line.

Frequency (MHz)	Spurious Emission				Limit (dBm)	Result
	Polarization	Level (dBm)	Correction Factor (dB)	Spurious emissions (dBm)		
1643.00	Vertical	-33.21	-6.47	-39.68	-13.00	PASS
2464.50	V	-35.98	-2.92	-38.90		
3286.00	V	-38.46	-0.48	-38.94		
1643.00	Horizontal	-32.18	-6.28	-38.46		
2464.5	H	-33.41	-3.01	-36.42		
3286.00	H	-36.54	-0.10	-36.64		

Band	n 26-2 (BPSK, 20MHz)	Test channel:	Lowest
Test mode:		Temperature:	25°C
		Relative Humidity:	56%

Note: Spurious emissions within 30-1000MHz were found more than 20dB below limit line.

Frequency (MHz)	Spurious Emission				Limit (dBm)	Result
	Polarization	Level (dBm)	Correction Factor (dB)	Spurious emissions (dBm)		
1668.00	Vertical	-34.47	-6.46	-40.93	-13.00	PASS
2502.00	V	-36.28	-2.78	-39.06		
3336.00	V	-39.69	-0.48	-40.17		
1668.00	Horizontal	-33.81	-6.31	-40.12		
2502.00	H	-36.72	-2.90	-39.62		
3336.00	H	-38.65	-0.10	-38.75		

Band	n 26-2 (BPSK, 20MHz)	Test channel:	Middle
Test mode:		Temperature:	25°C
		Relative Humidity:	56%

Note: Spurious emissions within 30-1000MHz were found more than 20dB below limit line.

Frequency (MHz)	Spurious Emission				Limit (dBm)	Result
	Polarization	Level (dBm)	Correction Factor (dB)	Spurious emissions (dBm)		
1673.00	Vertical	-33.76	-6.46	-40.22	-13.00	PASS
2509.50	V	-35.64	-2.75	-38.39		
3346.00	V	-40.96	-0.47	-41.43		
1673.00	Horizontal	-31.52	-6.32	-37.84		
2509.50	H	-37.05	-2.86	-39.91		
3346.00	H	-43.09	-0.10	-43.19		

Band	n 26-2 (BPSK, 20MHz)	Test channel:	Highest
Test mode:		Temperature:	25°C
		Relative Humidity:	56%

Note: Spurious emissions within 30-1000MHz were found more than 20dB below limit line.

Frequency (MHz)	Spurious Emission				Limit (dBm)	Result
	Polarization	Level (dBm)	Correction Factor (dB)	Spurious emissions (dBm)		
1678.00	Vertical	-35.82	-6.45	-42.27	-13.00	PASS
2517.00	V	-36.44	-2.71	-39.15		
3356.00	V	-37.27	-0.47	-37.74		
1678.00	Horizontal	-31.46	-6.33	-37.79		
2517.00	H	-35.02	-2.81	-37.83		
3356.00	H	-35.33	-0.10	-35.43		

Band	n 41 (BPSK, 100MHz)	Test channel:	Lowest
Test mode:		Temperature:	25°C
		Relative Humidity:	56%

Note: Spurious emissions within 30-1000MHz were found more than 20dB below limit line.

Frequency (MHz)	Spurious Emission				Limit (dBm)	Result
	Polarization	Level (dBm)	Correction Factor (dB)	Spurious emissions (dBm)		
5092.00	Vertical	-42.76	6.04	-36.72	-25.00	PASS
7638.00	V	-48.31	10.58	-37.73		
10184.00	V	-65.44	14.92	-50.52		
5092.00	Horizontal	-42.66	6.46	-36.20		
7638.00	H	-49.34	10.33	-39.01		
10184.00	H	-62.02	14.72	-47.30		

Band	n 41 (BPSK, 100MHz)	Test channel:	Middle
Test mode:		Temperature:	25°C
		Relative Humidity:	56%

Note: Spurious emissions within 30-1000MHz were found more than 20dB below limit line.

Frequency (MHz)	Spurious Emission				Limit (dBm)	Result
	Polarization	Level (dBm)	Correction Factor (dB)	Spurious emissions (dBm)		
5186.00	Vertical	-42.67	6.19	-36.48	-25.00	PASS
7779.00	V	-55.31	10.74	-44.57		
10372.00	V	-62.02	15.04	-46.98		
5186.00	Horizontal	-40.63	6.64	-33.99		
7779.00	H	-49.82	10.68	-39.14		
10372.00	H	-61.90	15.04	-46.86		

Band	n 41 (BPSK, 100MHz)	Test channel:	Highest
Test mode:		Temperature:	25°C
		Relative Humidity:	56%

Note: Spurious emissions within 30-1000MHz were found more than 20dB below limit line.

Frequency (MHz)	Spurious Emission				Limit (dBm)	Result
	Polarization	Level (dBm)	Correction Factor (dB)	Spurious emissions (dBm)		
5280.00	Vertical	-43.76	6.34	-37.42	-25.00	PASS
7920.00	V	-54.75	10.91	-43.84		
10560.00	V	-61.65	15.17	-46.48		
5280.00	Horizontal	-41.67	6.82	-34.85		
7920.00	H	-50.39	11.04	-39.35		
10560.00	H	-64.78	15.36	-49.42		

Band	n 66 (BPSK, 20MHz)	Test channel:	Lowest
Test mode:		Temperature:	25°C
		Relative Humidity:	56%

Note: Spurious emissions within 30-1000MHz were found more than 20dB below limit line.

Frequency (MHz)	Spurious Emission				Limit (dBm)	Result
	Polarization	Level (dBm)	Correction Factor (dB)	Spurious emissions (dBm)		
3440.00	Vertical	-42.96	-0.46	-43.42	-13.00	PASS
5160.00	V	-49.61	6.15	-43.46		
6880.00	V	-64.07	9.78	-54.29		
3440.00	Horizontal	-44.66	-0.11	-44.77		
5160.00	H	-46.34	6.59	-39.75		
6880.00	H	-61.56	9.70	-51.86		

Band	n 66 (BPSK, 20MHz)	Test channel:	Middle
Test mode:		Temperature:	25°C
		Relative Humidity:	56%

Note: Spurious emissions within 30-1000MHz were found more than 20dB below limit line.

Frequency (MHz)	Spurious Emission				Limit (dBm)	Result
	Polarization	Level (dBm)	Correction Factor (dB)	Spurious emissions (dBm)		
3490.00	Vertical	-41.12	-0.45	-41.57	-13.00	PASS
5235.00	V	-53.24	6.27	-46.97		
6980.00	V	-63.45	10.21	-53.24		
3490.00	Horizontal	-40.01	-0.11	-40.12		
5235.00	H	-47.95	6.73	-41.22		
6980.00	H	-61.90	10.07	-51.83		

Band	n 66 (BPSK, 20MHz)	Test channel:	Highest
Test mode:		Temperature:	25°C
		Relative Humidity:	56%

Note: Spurious emissions within 30-1000MHz were found more than 20dB below limit line.

Frequency (MHz)	Spurious Emission				Limit (dBm)	Result
	Polarization	Level (dBm)	Correction Factor (dB)	Spurious emissions (dBm)		
3540.00	Vertical	-46.14	-0.18	-46.32	-13.00	PASS
5310.00	V	-57.30	6.38	-50.92		
7080.00	V	-66.92	10.31	-56.61		
3540.00	Horizontal	-42.73	0.29	-42.44		
5310.00	H	-48.35	6.87	-41.48		
7080.00	H	-65.94	10.11	-55.83		

Band	n 77 (BPSK, 100MHz)	Test channel:	Lowest
Test mode:		Temperature:	25°C
		Relative Humidity:	56%

Note: Spurious emissions within 30-1000MHz were found more than 20dB below limit line.

Frequency (MHz)	Spurious Emission				Limit (dBm)	Result
	Polarization	Level (dBm)	Correction Factor (dB)	Spurious emissions (dBm)		
7500.00	Vertical	-43.61	10.41	-33.20	-13.00	PASS
11250.00	V	-46.08	15.26	-30.82		
15000.00	V	-65.67	15.00	-50.67		
7500.00	Horizontal	-43.89	9.98	-33.91		
11250.00	H	-47.31	15.91	-31.40		
15000.00	H	-63.90	14.90	-49.00		

Band	n 77 (BPSK, 100MHz)	Test channel:	Middle
Test mode:		Temperature:	25°C
		Relative Humidity:	56%

Note: Spurious emissions within 30-1000MHz were found more than 20dB below limit line.

Frequency (MHz)	Spurious Emission				Limit (dBm)	Result
	Polarization	Level (dBm)	Correction Factor (dB)	Spurious emissions (dBm)		
7680.00	Vertical	-42.16	10.63	-31.53	-13.00	PASS
11520.00	V	-53.55	15.00	-38.55		
15360.00	V	-62.38	14.00	-48.38		
7680.00	Horizontal	-41.88	10.43	-31.45		
11520.00	H	-49.33	15.70	-33.63		
15360.00	H	-63.04	14.20	-48.84		

Band	n 77 (BPSK, 100MHz)	Test channel:	Highest
Test mode:		Temperature:	25°C
		Relative Humidity:	56%

Note: Spurious emissions within 30-1000MHz were found more than 20dB below limit line.

Frequency (MHz)	Spurious Emission				Limit (dBm)	Result
	Polarization	Level (dBm)	Correction Factor (dB)	Spurious emissions (dBm)		
7860.00	Vertical	-44.94	10.84	-34.10	-13.00	PASS
11790.00	V	-53.55	14.80	-38.75		
15720.00	V	-61.90	13.00	-48.90		
7860.00	Horizontal	-41.21	10.89	-30.32		
11790.00	H	-48.06	15.50	-32.56		
15720.00	H	-62.95	13.50	-49.45		

Band	n 78 (BPSK, 90MHz)	Test channel:	Lowest
Test mode:		Temperature:	25°C
		Relative Humidity:	56%

Note: Spurious emissions within 30-1000MHz were found more than 20dB below limit line.

Frequency (MHz)	Spurious Emission				Limit (dBm)	Result
	Polarization	Level (dBm)	Correction Factor (dB)	Spurious emissions (dBm)		
6990.00	Vertical	-43.72	10.25	-33.47	-13.00	PASS
10485.00	V	-50.45	15.12	-35.33		
13980.00	V	-65.13	19.10	-46.03		
6990.00	Horizontal	-46.37	10.10	-36.27		
10485.00	H	-46.20	15.23	-30.97		
13980.00	H	-62.57	17.80	-44.77		

Band	n 78 (BPSK, 90MHz)	Test channel:	Middle
Test mode:		Temperature:	25°C
		Relative Humidity:	56%

Note: Spurious emissions within 30-1000MHz were found more than 20dB below limit line.

Frequency (MHz)	Spurious Emission				Limit (dBm)	Result
	Polarization	Level (dBm)	Correction Factor (dB)	Spurious emissions (dBm)		
7000.00	Vertical	-44.99	10.29	-34.70	-13.00	PASS
10500.00	V	-54.55	15.13	-39.42		
14000.00	V	-65.91	19.20	-46.71		
7000.00	Horizontal	-41.26	10.14	-31.12		
10500.00	H	-47.61	15.26	-32.35		
14000.00	H	-63.02	17.90	-45.12		

Band	n 78 (BPSK, 90MHz)	Test channel:	Highest
Test mode:		Temperature:	25°C
		Relative Humidity:	56%

Note: Spurious emissions within 30-1000MHz were found more than 20dB below limit line.

Frequency (MHz)	Spurious Emission				Limit (dBm)	Result
	Polarization	Level (dBm)	Correction Factor (dB)	Spurious emissions (dBm)		
7010.00	Vertical	-46.29	10.29	-36.00	-13.00	PASS
10515.00	V	-55.80	15.14	-40.66		
14020.00	V	-67.52	19.10	-48.42		
7010.00	Horizontal	-41.66	10.14	-31.52		
10515.00	H	-49.89	15.29	-34.60		
14020.00	H	-66.85	17.80	-49.05		

5.6. Frequency Stability Measurement

5.6.1. Test Specification

Test Requirement:	FCC part 22.355, FCC part 24.235, FCC part 27.54, FCC part 90.213
Test Method:	FCC Part 2.1055
Limit:	For 5G NR n 5, 26: 1.5 ppm is for base and fixed station. 2.5 ppm is for mobile station. For 5G NR n 2, 7, 25, 41, 66, 77, 78: The frequency stability shall be sufficient to ensure that the fundamental emissions stay within the authorized bands of operation (authorized frequency block).
Test Setup:	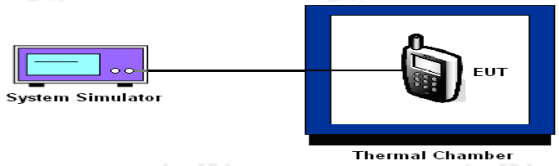
Test Procedure:	**Test Procedures for Temperature Variation** 1. The testing follows FCC KDB 971168 D01v03r01 Section 9.0. 2. The EUT was set up in the thermal chamber and connected with the system simulator. 3. With power OFF, the temperature was decreased to -30°C and the EUT was stabilized before testing. Power was applied and the maximum change in frequency was recorded within one minute. 4. With power OFF, the temperature was raised in 10°C steps up to 50°C. The EUT was stabilized at each step for at least half an hour. Power was applied and the maximum frequency change was recorded within one minute. **Test Procedures for Voltage Variation** 1. The testing follows FCC KDB 971168 D01v03r01 Section 9.0. 2. The EUT was placed in a temperature chamber at 25±5° C and connected with the system simulator. 3. The power supply voltage to the EUT was varied from BEP to 115% of the nominal value measured at the input to the EUT. 4. The variation in frequency was measured for the worst case. 5. The worst case(worst bandwidth) for frequency stability reported in the Test Data. The worst bandwidth is as follow: 5M is for 5G NR n 2, 5M is for 5G NR n 5, 5M is for 5G NR n 7, 5M is for 5G NR n 25,

	5M is for 5G NR n 26-1, 5M is for 5G NR n 26-2, 20M is for 5G NR n 41, 5M is for 5G NR n 66, 20M is for 5G NR n 77, 20M is for 5G NR n 78
Test Result:	PASS

5.6.2. Test Instruments

Equipment	Manufacturer	Model	Serial Number	Calibration Due
Wireless communication test platform	Anritsu	MT8000A	6262208369	Jan. 31, 2025
Radio communication analyzer	Anritsu	MT8821C	6262192286	Jan. 31, 2025
Programable tempratuce and humidity chamber	JQ	JQ-2000	510101234	Jun. 26, 2025
DC power supply	Kingrang	KR3005K	/	Jun. 26, 2025

Appendix B: Photographs of Test Setup

Refer to the test report No. TCT240516E022

Appendix C: Photographs of EUT

Refer to the test report No. TCT240516E022

Test Data for Appendix Refer to Appendix For 5G NR n 2, Appendix For 5G NR n 5, Appendix For 5G NR n 7, Appendix For 5G NR n 25, Appendix For 5G NR n 26-1, Appendix For 5G NR n 26-2, Appendix For 5G NR n 41, Appendix For 5G NR n 66, Appendix For 5G NR n 77 and Appendix For 5G NR n 78

********END OF REPORT********