FCC Statement

This equipment has been tested and found to comply with the limits for a Class B digital device, pursuant to Part 15 of the FCC Rules. These limits are designed to provide reasonable protection against harmful interference in a residential installation. This equipment generates uses and can radiate radio frequency energy and, if not installed and used in accordance with the instructions, may cause harmful interference to radio communications. However, there is no guarantee that interference will not occur in a particular installation. If this equipment does cause harmful interference to radio or television reception, which can be determined by turning the equipment off and on, the user is encouraged to try to correct the interference by one or more of the following measures:

-- Reorient or relocate the receiving antenna.

-- Increase the separation between the equipment and receiver.

-- Connect the equipment into an outlet on a circuit different from that to which the receiver is connected.

-- Consult the dealer or an experienced radio/TV technician for help.

This device complies with part 15 of the FCC Rules. Operation is subject to the following two conditions:

(1) This device may not cause harmful interference, and (2) this device must accept any interference received, including interference that may cause undesired operation.

Changes or modifications not expressly approved by the party responsible for compliance could void the user's authority to operate the equipment.

MANUAL VERSION: V1.2

FOR AGES
12+

COLLAPSIBLE QUADROCOPTER

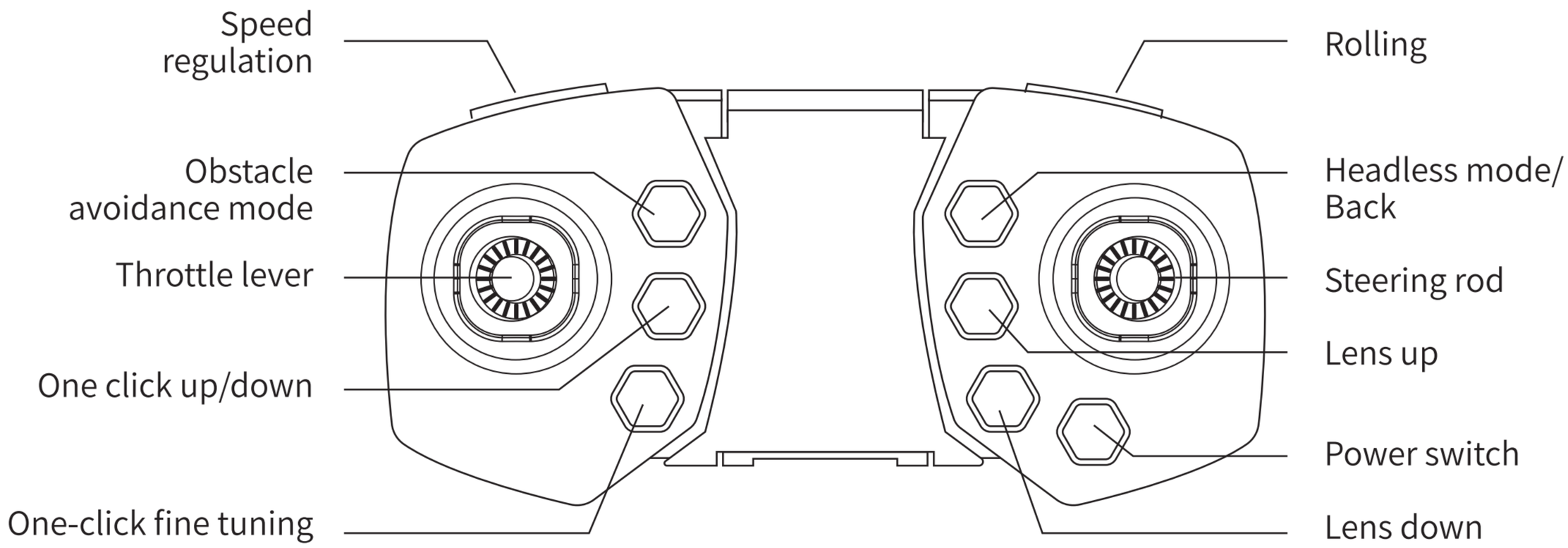

2.4 GHZ EDITION

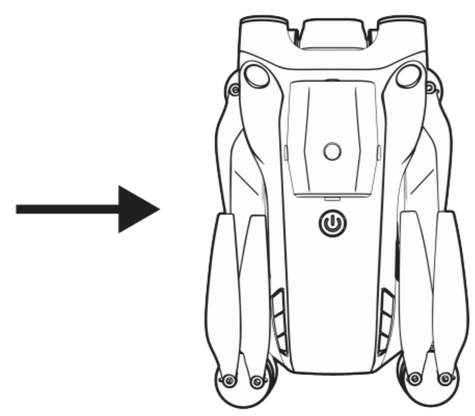

Limited to the original factory equipped with charger (USB) for charging.
Do not leave when charging.
The battery should be stored in a cool place to avoid exposure to the sun.

Read the manual completely before use (please read the caution and warning section). Save this manual for future reference

Battery installation and charging instructions

Uav detailed parameters and precautions for use

Do not use fast charge or high power charger.

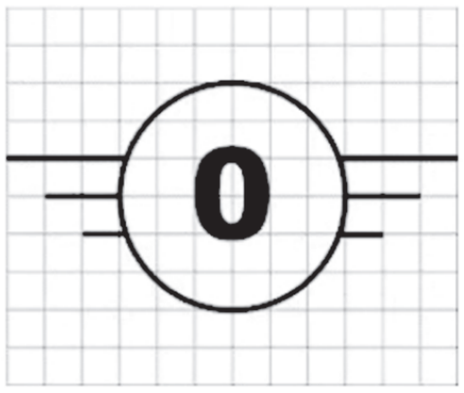

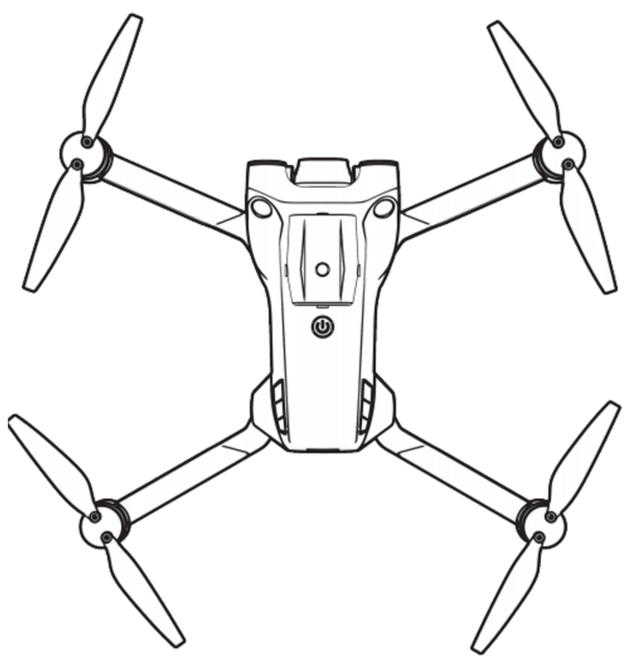

Charging time is about 80-100 minutes

According to the electrode instructions (+,-) of the battery box, insert the battery correctly (as shown)

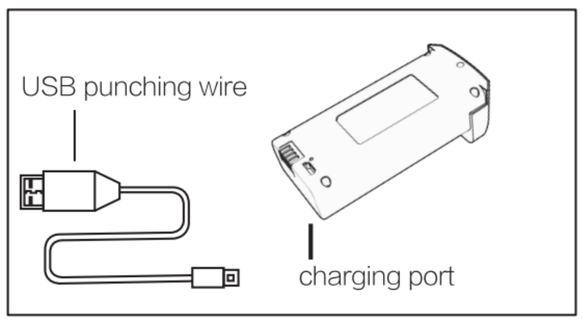

1. Remote control battery installation

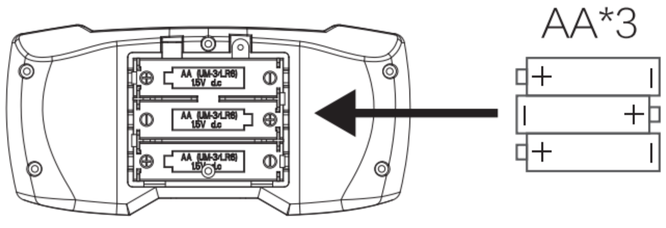

2. Lithium battery charging

(1) Remove the aircraft battery from the aircraft fuselage;
(2) Connect the battery to the dedicated punching wire, and then insert the punching wire into the computer USB port and other punching equipment;
(3) Lights up in red when charging, and lights out when full.

3. Aircraft battery installation and startup

Insert a fully charged battery into the battery compartment of the aircraft, and press and hold the power switch until the aircraft lights come on.

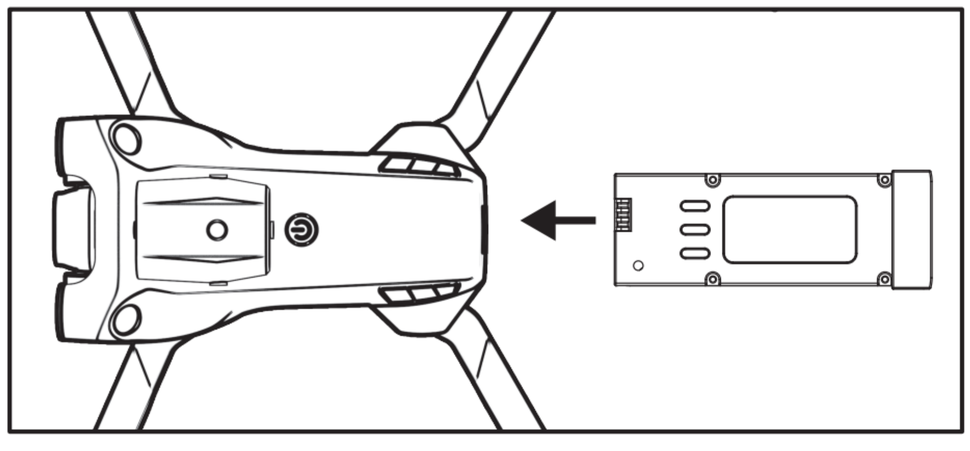

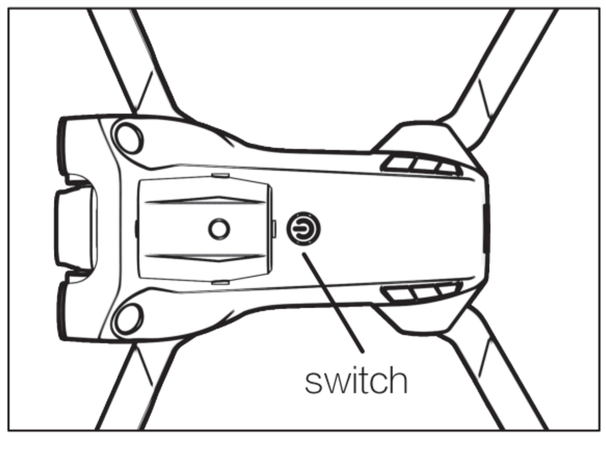

Aircraft installation

Aircraft Blade Installation

Please install the propeller in the direction of the picture on the right, and be sure to tighten the screws after installing in place

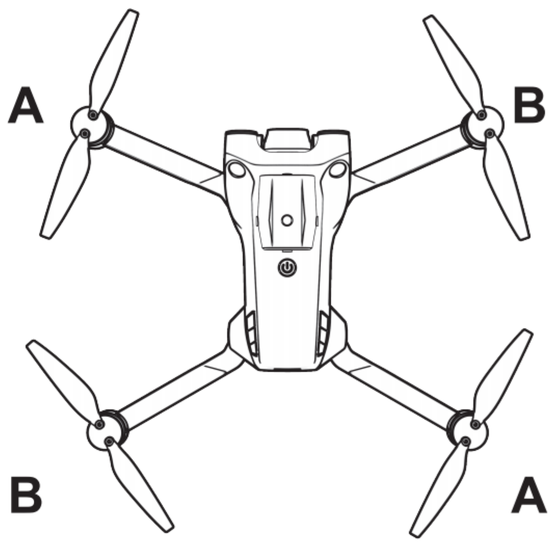

Remote control function description / Operation description

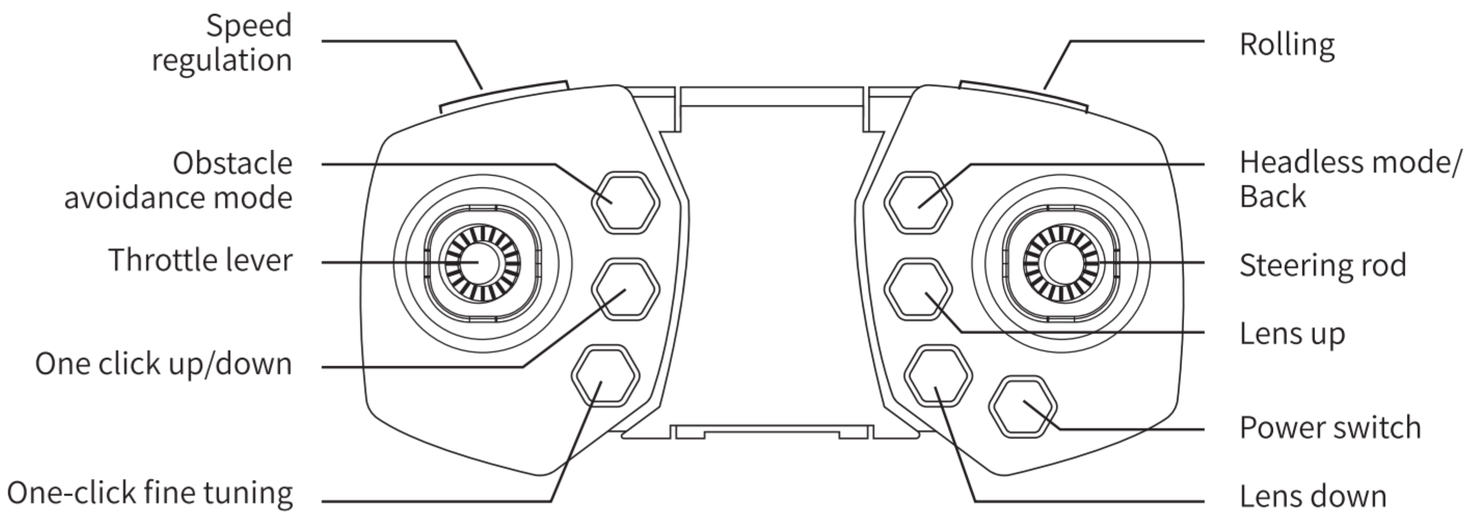

Short press: One button up/down
Long press: Emergency stop

1. Mobile phone hanger

Open the remote control phone holder and clamp the phone.

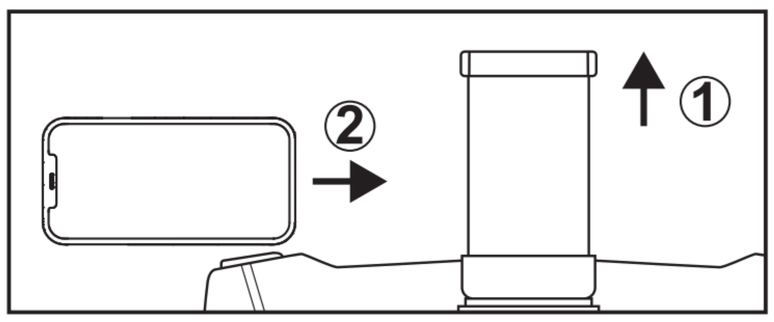

2. Pair the remote control with the aircraft

Turn on the power switch of the aircraft, place the aircraft on a flat ground, the aircraft indicator light flashes at this time, turn on the power switch of the remote control, push the power control lever to the highest position for 1 second and then pull it to the lowest position, the buzzer sounds a prompt , The aircraft indicator light keeps on indicating that the pairing is complete, and you can control it at this time.

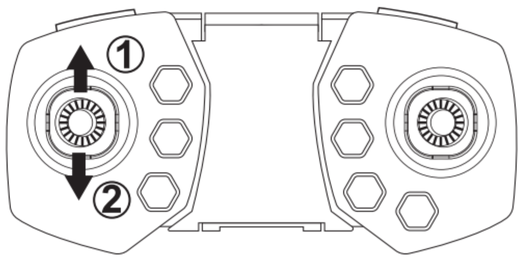

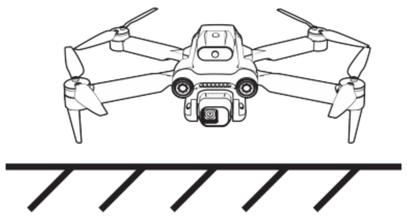

One-key take-off

3. One-key take-off and One-key landing

Tip: This product is set by barometer. Due to various environmental temperature and other factors, it is normal for the aircraft to change in height when starting flight or at low voltage.

Must be operated after pairing is completed

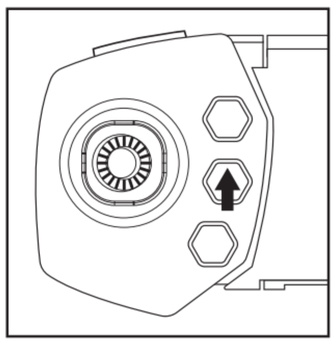

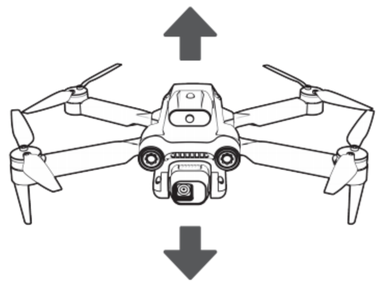

One-key landing

4. Flight control

- Throttle (left stick)

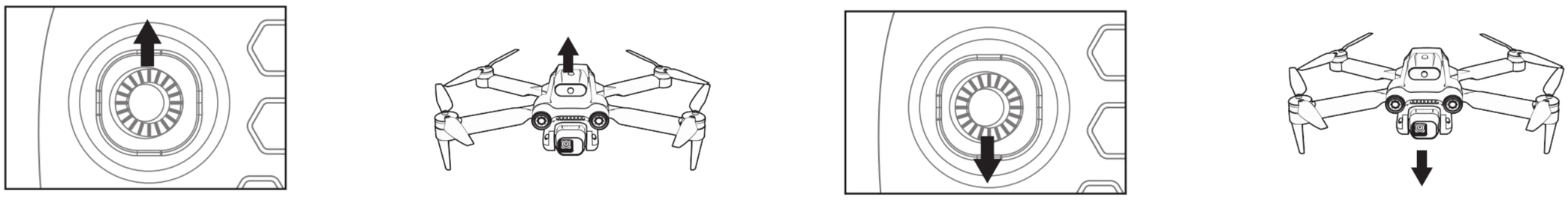

- Rotate left and right (left rocker)

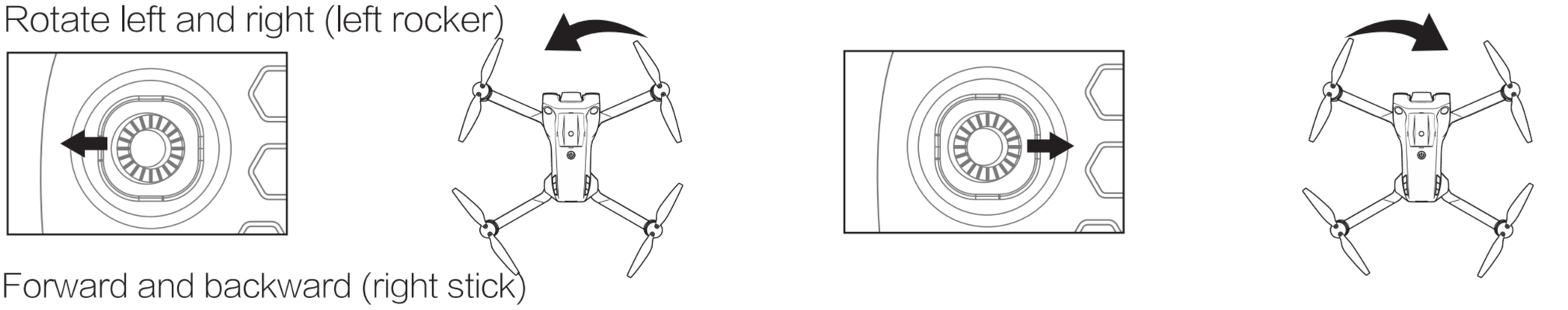

- Forward and backward (right stick)

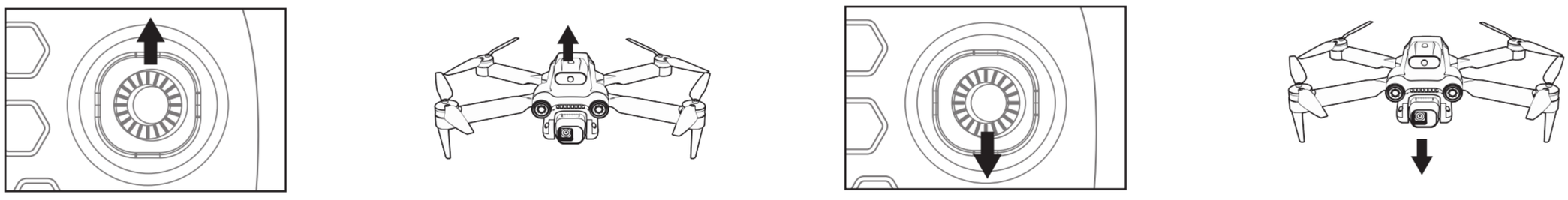

- Side fly (right stick)

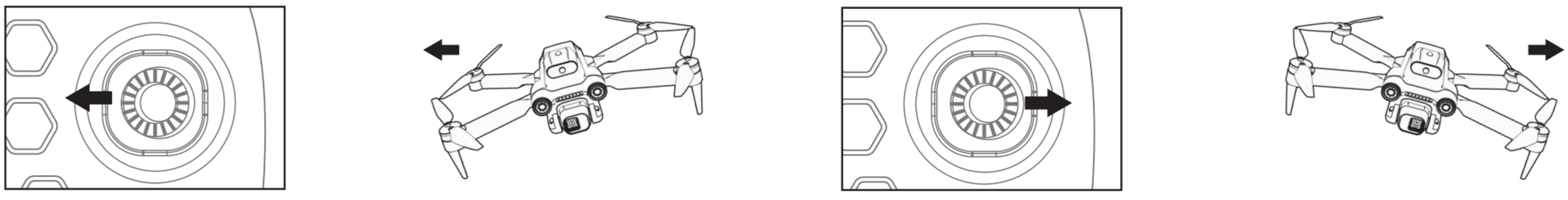

Headless mode direction definition and mode selection

When switching to headless mode, the aircraft will give up its front, back, left, and right directions, and and take the aircraft's nose direction (with the camera side) as the forward direction when pairing.

1. Definition of the direction before takeoff: place the aircraft's forward direction directly in front of you (with the camera side), then turn on the remote control to pair, and then complete the flight headless mode direction definition.
2. Press the headless mode key while flying, the remote controller will continue to make a sound, and the aircraft lights will flash quickly to enter the headless mode; press the headless mode key again, the remote controller will make two sounds to exit the headless mode.

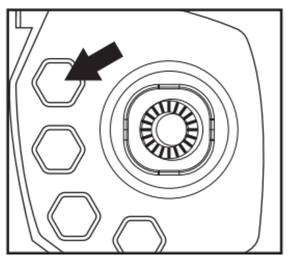

Obstacle avoidance switch

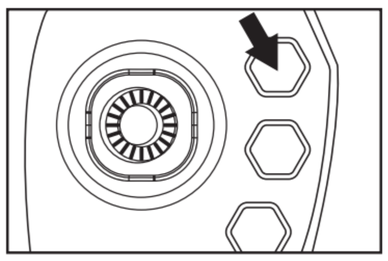

After turning on the aircraft, long press the obstacle avoidance mode button to turn on the obstacle avoidance mode The aircraft eye light will start to flash slowly, which is the obstacle avoidance mode. meanwhile Press the obstacle avoidance button briefly to turn it off (the aircraft eye light will not flash at this time)

Speed selection

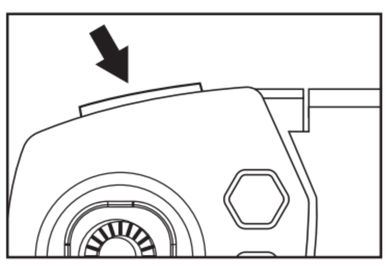

There are three speeds for forward, backward, and left and right side flight. The remote controller defaults to slow speed when the power is turned on. After pressing the speed key, two sounds are given for mid-range speed, three sounds are for fast speed and one sound returns to slow speed (Recommended for beginners to use slow speed operation)

One button emergency stop

If an emergency stop is required in case of danger during flight, you can press the emergency stop button briefly as shown in the figure, The aircraft stopped running immediately. Do not attempt to operate this function when the aircraft is flying at high altitude Otherwise the aircraft will fall quickly.

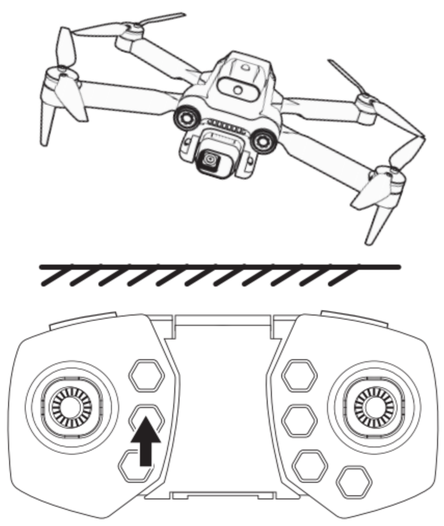

⚠ emergency stop

1. When the aircraft tilt angle exceeds 60 degrees, the aircraft will stop rotating;
2 When the propeller is stuck it will automatically stop the motor rotation;

Gyro Calibration

When the novice is operating the aircraft,if the flight is unstable afrer takeoff and slowly drifts in one direction,the gyro level correction function can be used to correct the aircraft.As shown in the picture on the right, after the start-up pairing is completed,the aircraft is placed on a flat ground,the remote control handle is turned to the right at the same time,the buzzer sounds a reminder,and the aircraft light flashes and then lights up, indicating that the calibration is complete.

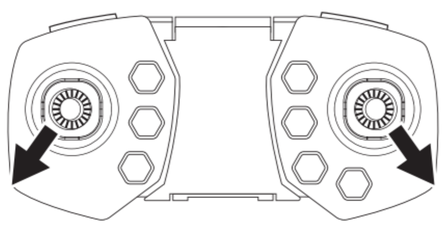

Camera up and down adjustment

When using drones, the camera direction can be adjusted by adjusting the up and down buttons on the lens

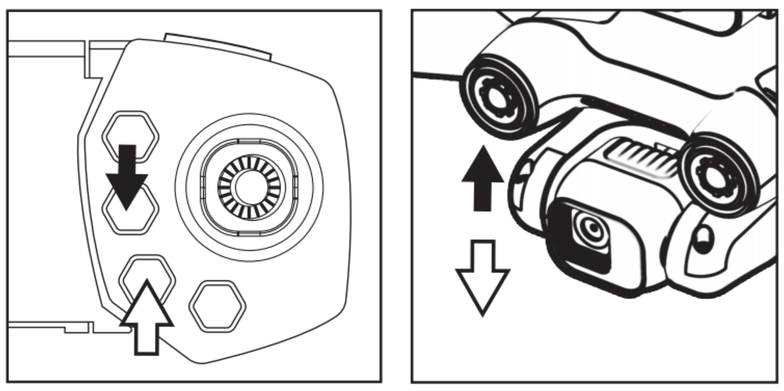

Aircraft calibration and emergency stop

problem	the reason	Approach
The indicator light flashes continuously,no response	The aircraft and remote control are not paired successfully	Please perform pairing again
Nothing happens when the battery is connected	(1)Check whether it is connected correctly or whether the battery has low voltage (2)Whether the positive and negative plates of the battery are in poor contact	(1)Reinstall the battery or charge or replace with a new battery (2) Confirm that the positive and negative polarities of the battery are installed correctly
The motor does not rotate when the throttle stick is pushed,and the indicator light keeps flashing	Aircraft battery is low	Charge the battery or replace it with a fully charged battery
The prooeller of the aircraft keeps turning but cannon take off	(1) Propeller derormation (2) The battery of the aircraft is low	(1) Replace the propeller (2) Charge the battery or replace a fully charged battery
The aircraft is very vibrating	Propeller deformation	Replace the propeller
The aircraft always drifts in one direction	The center point of the gyro on the aircraft is wrong	Recalibrate of restart
The aircraft can't balance after falling	The center point of the gyro on the aircraft is wrong	Recalibrate or restart

DRONE INFORMATION

Model No.: GD83 Class: C0

List of Items:
1. Battery (Model: HPY 122465), weight: 33g, Capacity: 2000mAh, Maximum Voltage: 4.2V, Nominal Voltage: 3.7V
2. Propeller (Model: 6.6cm), weight: 0.6g

List of Combination:
1. Remote Control Drone (GD83) + Remote Controller (GD83 Remote Controller)
2. Remote Control Drone (GD83) + APP (WiFi_CAM)
3. Remote Control Drone (GD83) + Remote Controller (GD83 Remote Controller) + APP (WiFi_CAM)

Drone Weight: 183g Maximum Take-Off Mass (MTOM): 185g
MTOM Statement:
1. GD83 drone's maximum take-off weight is 185g, including battery, propellers;
2. Users are prohibited from carrying accessories other than the list of items.

Max Size (Unfolded): 27 x 23 x 7 cm
Maximum Propellers Rotation Speed: 15540 RPM
Drone Sensor/Lights/Antenna Location: Refer to right photo

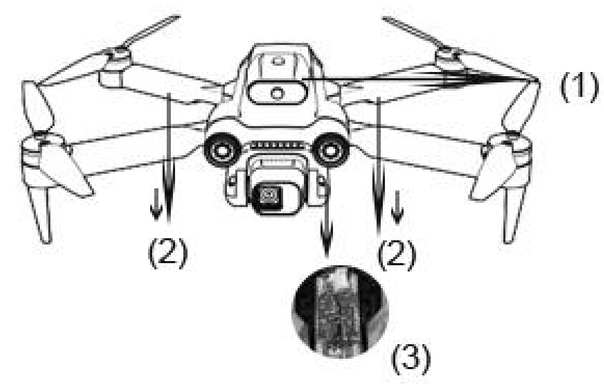

(1) Infrared Obstacle Avoidance Sensor
(2) Drone Arm Lights
(3) Drone Antenna (inside the drone)

How To Distinguish GD83 and GD83 Pro (Max):
1. GD83 is without GPS and control range is below 100m, GD83 Pro (Max) is with GPS and control range is below 1000m;
2. GD83 is equipped with infrared obstacle avoidance module, GD83 Pro (Max) is equipped with laser obstacle avoidance module.

Installation Steps: Please refer to Page 2-3 of User Manual

Remote Controller Model: GD83 Remote Controller
Remote Control Frequency: 2400MHz–2500MHz
RC Firmware Version: V1.3 RC Hardware Version: V1.2
Potential Sources of Interference: Crowd people, high-rise buildings, high-voltage wires, severe weather and etc.
Risks Of Misuse: Operation is disturbed, operation is insensitive, and even collision and crash may occur, causing damage to personnel and property.
How To Reduce Risks: Fly away from the sources of interference to ensure the safety
App Support: iOS 9.0 or above, Android 6.0 or above

Remote Controller Alert:
1. When the GD83 drone equip with infrared obstacle avoidance sensor module and it detect obstacle while operating it to fly to one direction, the remote controller will quickly beep, and fly a short distance in the opposite direction.
Solution: Fly to Opposite direction.
2. When the GD83 drone power is lower, the remote control will slowly beep and the lights on the drone will slowly flash.
Solution: Stop flying and charge the battery of the drone.

The Connection Between Drone & Remote Controller:
(1) When the drone and remote controller have not been connected, the power indicator on the remote control will be slowly flash, the lights on the drone will be slowly flash too.
(2) Turn on the drone and the remote controller, they will auto connect, and all the lights stop flash.
(3) There is not any alert when the connection between drone and remote controller lost, so please fly the drone within 100m to avoid lose connection. If fly further from 100m, please land the drone right away, restart the drone to re-build up the connection.

DRONE OPERATION

Pliot Health Requirements: This product should not be used while drinking alcohol or consuming drugs, if the pilots are feeling fatigued, taking medicine, or feeling anyphysical discomfort.

Instructions:
(1) Safe handling of batteries: Lithium-ion batteries are different from ordinary batteries made of a thin layer of paper. It's wrapped around a chemical substance, which could be great. But to reduce its weight, it becomes more sensitive to rough or inappropriate handling. Improper operation can cause the batteries in the model to not charge, which can lead to electric ignition and damage to the drone. So:
i. If you plan to use this product for a week or longer, please keep the battery level at 50% to extend battery life. Keep the battery at 50% and charge it within half of the time required for full charging.
ii. Please use the original professional charger to charge the battery. Do not charge on the carpet to avoid catching fire.
iii. Lithium batteries should be maintained after being stored for at least three months to ensure their expected lifespan.
(2) Cleaning and refurbishment: The interior of the drone is made up of many sophisticated electronic components and mechanical parts, it is necessary to prevent the drone away from wet or into the body, as as to avoid mechanical electronic components failure caused by accidents!
(3)Pre-flight Calibration: Before each flight need to calibrate the gyro on the level surface (refer to Page 4 'Gyro Calibration')

Flight Altitude Restrictions: Below 30 meters
Away From Crowds: The flight of the drone has an uncertain flight speed and state, which has potential risk. Please fly away from the crowds during your flight, to ensure the safety of pilots, the surroundings population and the property.
Other Local Restrictions Apply: The flight site must be a local legal remote control model flight site, please away from flight-forbidden area.

Visual & Functional Checklist of Drone:
(1) Drone structure is complete, appearance is not damaged and can be connected to the remote control normally;
(2) Motor is complete and good use;
(3) Propellers are complete, no damage and install correctly;
(4) Battery is full power;

Visual & Functional Checklist of Remote Controller:
(1) Remote controller can be connected to the drone normally;
(2) Buttons and joysticks use normally;
(3) Battery is full power

Standard (Recommended) Flight Environment: Away from interference sources, obstacles and crowds, in a clear, windless or lightly breezy environment

Emergency Operation Introduction: When the drone meet emergency situation, please use the "emergency stop" method to stop the drone flying and avoid any people or property damage.

Software Update Guide: Please update the APP when Google Play or iOS App Store upload the latest version of APP

Take-off Method: Please refer to Page 4

Guidance On Transportation & Storage Of Drone, Remote Control And Battery:
(1) Please keep the drone, remote control and battery in a dry and cool environment to prevent moisture from entering the drone and damaging electronic components;
(2) Please take out the battery of remote control after each using;

(3) Don't put the battery in the drone for charging, which may cause the battery to fire and damage the drone;
(4) If plan to not use this product for one week or more, keep the battery 50% power and it will increase the battery life;
(5) Please use the original professional charging cable to charge the battery;
(6) Don't charge the battery on the carpet to prevent fire;
(7) If the battery keep 3 months or more, please charge it again to keep its battery life.

Checklist After Flight:
(1) The drone isn't crashed or damaged, motors and propellers are good;
(2) The drone and the remote control has been closed after flight;
(3) If the battery is in low power, please charge it in time.

DRONE OPERATION LIMIT

GD83 drone only have one flight mode: optical flow mode, and this mode has 3 gear:

Maximum Speed:
(1) First Gear: Not Suitable For Outdoor Fly
(2) Second Gear: 7 m/s
(3) Third Gear: 9 m/s
Maximum Flight Altitude Restrictions: Below 30 meters

Flight Restrictions:
(1) Maximum Take Off Altitude: 3000 meters
(2) Don't fly near electromagnetic sources such as high-voltage electric pipes;
(3) Don't fly near high-intensity radiation fields (such as high-power radar or TV broadcast antenna transmitters);
(4) Do not fly near buildings, and fly at least 100m away from buildings

Performance Limit:
(1) Battery Working Temperature: -5~40℃
(2) Battery Using Cycles: About 150 times
(3) Battery Usage Time: About 15 minutes (from 100% power to 0% power)
(4) GD83 battery only could be used for GD83 models, can't be used for other drones or other products.

Environmental Restrictions:
(1) The drone can be fly at the daytime or night;
(2) Maximum wind resistance: 2.5 m/s);
(3) Operation, transportation & storage limit: Please operate, transpotate and store the drone below 3000 meters altitude, -5~40℃ temperature and below 70%RH dry environment;
(4) Avoid to fly the drone in rainy, snowy, foggy and other extreme weather conditions

RISKS OF DRONE OPERATION

Risk Checklist
(1) Risk Checklist for Pre-flight:
i. Install propellers incorrectly and caused the drone could not take off successfully
ii. The battery is low power and caused the drone could not take off successfully

(2) Risk Checklist for Post-flight:
i, Forget to close the power of drone/remote controller and misoperate the remote control cause motors suddenly rotating/drone suddenly take off;
ii. Forget to take out the battery of remote controller for a long time and caused battery damage

(3) Risks During Flight Operations:
i, Unfamiliar to drone operation, misoperate the drone and caused the drone fly to wrong direction, hit some obstacle or even crash;

ii. Fly in a unsuitable weather and caused the drone fly to wrong direction, hit some obstacle or even crash;
iii. Fly too closed to the interference sources or building and caused the drone hit some obstacle or even crash.

(4). UAV System Maintenance:
i. Repairs by personnel who are not familiar with drones may cause damage to the drone's internal parts;
ii. Repairs using unofficial parts may render the drone unusable or even damage other internal electronic components.

(5). Transportation Risks:
(1) The appearance/internal damage of the drone caused by violent transportation.
(2) The appearance/internal damage of the drone caused by inappropriate transportation conditions, such as high temperature, high humidity, transportation with other corrosive chemicals, etc.

(6) Storage Risks
The appearance/internal damage of the drone caused by inappropriate storage conditions, such as high temperature, high humidity, stored with other corrosive chemicals, etc.

Flight Restrictions:
(1) Maximum Take Off Altitude: 3000 meters
(2) Don't fly near electromagnetic sources such as high-voltage electric pipes;
(3) Don't fly near high-intensity radiation fields (such as high-power radar or TV broadcast antenna transmitters);

Data Safety:
(1) This model cannot use external devices to download video images and software updates through the Internet, so it will not cause data exchange and endanger software integrity.
(2) This drone cannot be equipped with sensors that can detect personal data, so it will not infringe or damage personal data.

Privacy Protection
When using drones to take photos/videos, you should fully consider the content of the photos/ videos, respect the privacy of others, and avoid infringing on the privacy of others.

List of All Safeguards
(1) Protective Frame of Propellers: Not useful for this drone.
(2) Emergency Stop: When encountering an emergency, please press and hold the 'emergency stop' button to stop the operation of the drone.

Certificate Reference: Shantou Globalwin Intelligent Technology Co., Ltd.
Address: No. 133, Block 7-14, Kaide Garden, No.145 Jinsha Road, Longhu District, Shantou City, Guangdong, China
Website: www.toys-china.com
Brand: Global Drone

GLOBAL DRONE®

APP USER GUIDE

INSTALL THE DRONE' S APP:

1. Search 'WiFi_CAM' in Apple Store or Google Play to get the App.
2. Scan the QR Code to download the App.

CONNECTION DETAILS:

1. Turn on the power of the model, the red light flash, waiting for connection on the mobile phone.
2. Click 'Settings' option on the mobile phone, open the Wifi, find a Wifi network list called 'WIFI_xxx xxxx', click connection until 'Connected', and then exit the settings option.
3. Open the software, click 'START' icon into the control interface.
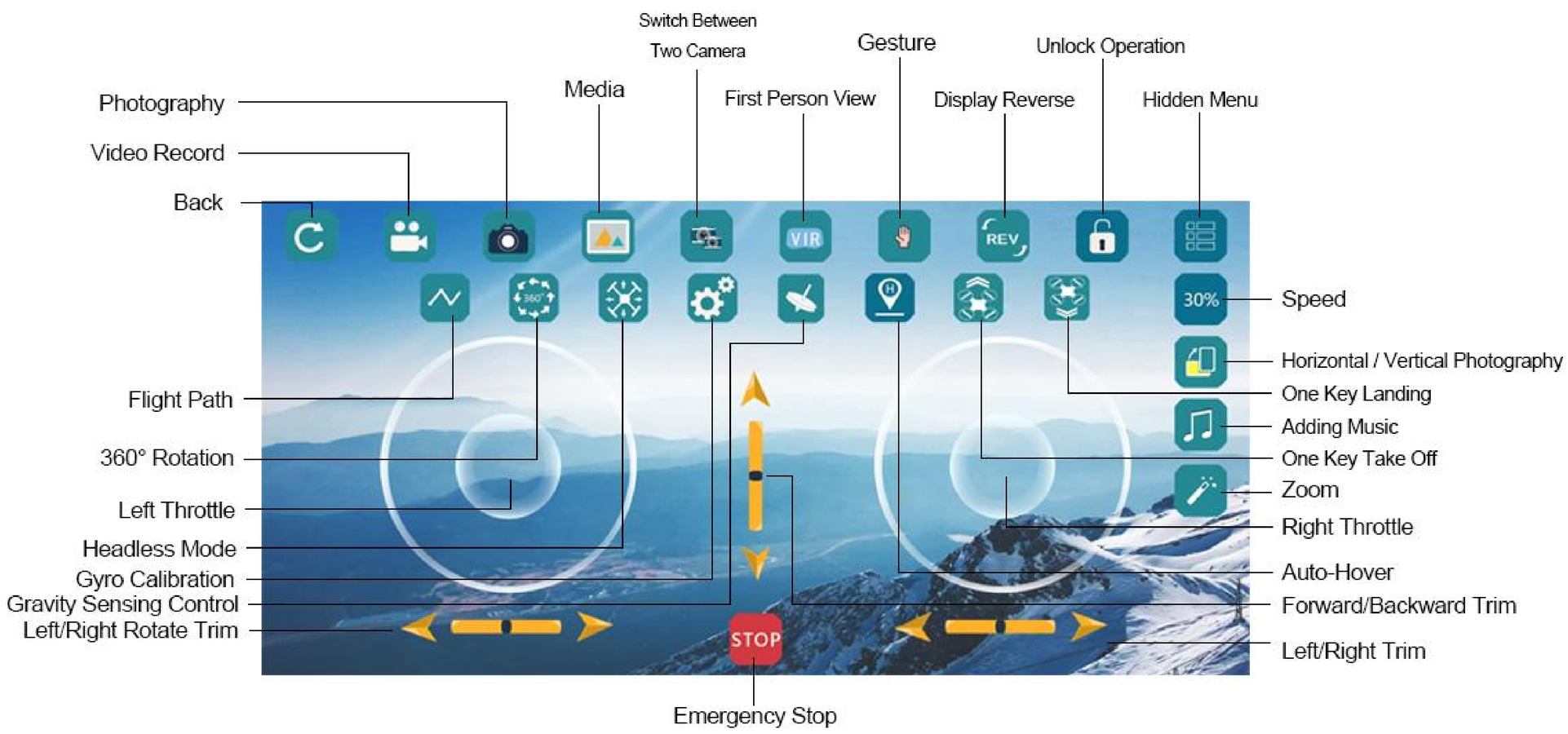
WiFi_CAM FUNCTION INTRODUCTION: