FCC Test Report

Report No: FCS202309177W01

Issued for

Applicant:	Huizhou OJD Technology Co., Ltd
Address:	7F, Building 20, Zoina Hi-tech Industrial Park,No.6 Xinhua Avenue, Chenjiang Street, Zhongkai High-tech Zone, Huizhou city, Guangdong Province,China
Product Name:	3 in 1 Wireless Charger
Brand Name:	OJD
Model Name:	OJD-105
Series Model:	OJD-106, OJD-107, OJD-109, OJD-117, OJD-118, OJD-119, OJD-120, OJD-121, OJD-122, XQ01
FCC ID:	2A9NX-OJD-105
Issued By: Flux Compliance Service Laboratory Add: Room 105 Floor Bao hao Technology Building 1 NO.15 Gong ye West Road Hi-Tech Industrial, Song shan lake Dongguan Tel: 769-27280901 Fax:769-27280901 http://www.fcs-lab.com	

TEST RESULT CERTIFICATION

Applicant's Name..... :	Huizhou OJD Technology Co., Ltd
Address..... :	7F, Building 20, Zoina Hi-tech Industrial Park,No.6 Xinhua Avenue, Chenjiang Street, Zhongkai High-tech Zone, Huizhou city, Guangdong Province,China
Manufacture's Name..... :	Huizhou OJD Technology Co., Ltd
Address..... :	7F, Building 20, Zoina Hi-tech Industrial Park,No.6 Xinhua Avenue, Chenjiang Street, Zhongkai High-tech Zone, Huizhou city, Guangdong Province,China

Product Description

Product Name..... :	3 in 1 Wireless Charger
Brand Name .....:	OJD
Model Name..... :	OJD-105
Series Model.....:	OJD-106, OJD-107, OJD-109, OJD-117, OJD-118, OJD-119, OJD-120, OJD-121, OJD-122, XQ01
Test Standards.....:	FCC Rules and Regulations Part 15 Subpart C, Section 209
Test Procedure.....:	ANSI C63.10:2013

This device described above has been tested FCS, the test results show that the equipment under test (EUT) is in compliance with the FCC requirements. And it is applicable only to the tested sample identified in the report.
This report shall not be reproduced except in full, without the written approval of FCS, this document may be altered or revised by FCS, personal only, and shall be noted in the revision of the document..

Date of Test.....:

Date (s) of performance of tests. :	Sep 24. 2023 ~ Sep 27. 2023
Date of Issue.....:	Sep 27. 2023
Test Result..... :	Pass

Tested by : Scott Shen

(Scott Shen)

Reviewed by : Duke Qian

(Duke Qian)

Approved by : Jack Wang

(Jack Wang)

Table of Contents **Page**

1. SUMMARY OF TEST RESULTS 5
1.1 TEST FACTORY 6
1.2 MEASUREMENT UNCERTAINTY 6
2. GENERAL INFORMATION 7
2.1 GENERAL DESCRIPTION OF THE EUT 7
2.2 DESCRIPTION OF THE TEST MODES 8
2.3 DESCRIPTION OF NECESSARY ACCESSORIES AND SUPPORT UNITS 9
2.4 EQUIPMENTS LIST 10
3 CONDUCTED EMISSION MEASUREMENT 11
3.1 LIMIT 11
3.2 TEST PROCEDURE 11
3.3 TEST SETUP 12
3.4 TEST RESULTS 13
4. RADIATED EMISSION MEASUREMENT 15
4.1 LIMIT 15
4.2 TEST PROCEDURE 16
4.3 TEST SETUP 17
4.4 TEST RESULTS 18
(30MHZ-1000MHZ) 19
5. 20 DB BANDWIDTH TEST 21
5.1 LIMIT 21
5.2 TEST PROCEDURE 21
5.3 TEST SETUP 21
5.4 TEST RESULTS 22
6. ANTENNA REQUIREMENT 25
6.1 STANDARD REQUIREMENT 25
6.2 EUT ANTENNA 25

Revision History

Rev.	Issue Date	Effect Page	Contents
00	Sep 27. 2023	N/A	N/A

1. SUMMARY OF TEST RESULTS

FCC Rules and Regulations Part 15 Subpart C, Section 209			
Standard Section	Test Item	Judgment	Remark
15.207	Conducted Emission	PASS	--
15.209(a) (f)	Radiated Spurious Emission	PASS	--
15.215(c)	20dB Bandwidth	PASS	--
15.203	Antenna Requirement	PASS	--

NOTE:

(1)" N/A" denotes test is not applicable in this Test Report

(2) All tests are according to ANSI C63.10-2013

1.1 TEST FACTORY

Company Name:	Flux Compliance Service Laboratory
Address:	Room 105 Floor Bao hao Technology Building 1 NO.15 Gong ye West Road Hi-Tech Industrial, Song shan lake Dongguan
Telephone:	+86-769-27280901
Fax:	+86-769-27280901
Laboray Accreditations:	
FCC Test Firm Registration Number:	514908
CNAS Number:	L15566
Designation number:	CN0127
A2LA accreditation number:	5545.01
ISED Number:	25801
CAB ID:	CN0097

1.2 MEASUREMENT UNCERTAINTY

The reported uncertainty of measurement **y ±U**, where expended uncertainty **U** is based on a standard uncertainty multiplied by a coverage factor of **k=2**, providing a level of confidence of approximately **95** %.

No.	Item	Uncertainty
1	RF output power, conducted	±0.71dB
2	Unwanted Emissions, conducted	±2.98 dB
3	Conducted Emission (9KHz-150KHz)	±4.13 dB
4	Conducted Emission (150KHz-30MHz)	±4.74 dB
5	All emissions,radiated (9KHz -30MHz)	±3.1 dB
6	All emissions,radiated(<1G) 30MHz-1000MHz	±3.2 dB
7	All emissions,radiated (1GHz -18GHz)	±3.66 dB
8	All emissions,radiated (18GHz -40GHz)	±4.31 dB
9	Occupied bandwidth	±0.3 dB

2. GENERAL INFORMATION

2.1 GENERAL DESCRIPTION OF THE EUT

Product Name	3 in 1 Wireless Charger
Trade Name	OJD
Model Name	OJD-105
Series Model	OJD-106, OJD-107, OJD-109, OJD-117, OJD-118, OJD-119, OJD-120, OJD-121, OJD-122, XQ01
Model Difference	The above product with same circuit, PCB layout, electrical parts, materials and wiring structures, Appearance shape, the materials of decorative accessories is same, only different color.
Channel List	Please refer to the Note 2.
Operation frequency	115-205KHz
Modulation Type	MSK
Antenna Type	Inductive Loop Antenna with 1.0dBi
Power Supply	Input:9V/2A iWatch Charging Output:3W (max) Earphone Charging Output:3W (max) Phone ChargingOutput:5W/7.5W/10W/15W
Rated voltage	DC 9V by adapter
Test voltage	DC 9V by adapter
Hardware version number	V1.0
Software version number	V1.0
Connecting I/O Port(s)	Please refer to the User's Manual

Note:

1. For a more detailed features description, please refer to the manufacturer's specifications or the User's Manual.

2. Operation frequency:115KHz~205KHz
3. Table for Filed Antenna

Ant.	Brand	Model Name	Antenna Type	Connector	Gain (dBi)	NOTE
1	N/A	N/A	Inductive Loop Antenna	N/A	1.0dBi	Antenna

2.2 DESCRIPTION OF THE TEST MODES

To investigate the maximum EMI emission characteristics generates from EUT, the test system was pre-scanning tested base on the consideration of following EUT operation mode or test configuration mode which possible have effect on EMI emission level. Each of these EUT operation mode(s) or test configuration mode(s) mentioned above was evaluated respectively.

Test software: Test manually using a fixed-frequency prototype

The fixed-frequency prototype is used to manually control the EUT to work in continuous TX mode, select the test channel, and the wireless mode is shown in the following table

Tested mode, Description	
Mode	Description
Mode 1	iWatch(3W)
Mode 2	Earbuds(3W)
Mode 3	Phone(5W)
Mode 4	Phone(7.5W)
Mode 5	Phone(10W)
Mode 6	Phone(15W)
Mode 7	iWatch(3W)+Earbuds(3W)+Phone(5W)
Mode 8	iWatch(3W)+Earbuds(3W)+Phone(7.5W)
Mode 9	iWatch(3W)+Earbuds(3W)+Phone(10W)
Mode 10	iWatch(3W)+Phone(5W)
Mode 11	iWatch(3W)+Phone(7.5W)
Mode 12	iWatch(3W)+Phone(10W)
Mode 13	iWatch(3W)+Phone(15W)
Mode 14	Earbuds(3W)+Phone(5W)
Mode 15	Earbuds(3W)+Phone(7.5W)
Mode 16	Earbuds(3W)+Phone(10W)
Mode 17	Earbuds(3W)+Phone(15W)
Mode 18	iWatch(3W)+Earbuds(3W)
Mode 19	iWatch(3W)+Earbuds(3W)
Mode 20	iWatch(3W)+Earbuds(3W)
Mode 21	iWatch(3W)+Earbuds(3W)

2.3 DESCRIPTION OF NECESSARY ACCESSORIES AND SUPPORT UNITS

The EUT has been tested as an independent unit together with other necessary accessories or support units. The following support units or accessories were used to form a representative test configuration during the tests.

Necessary accessories

Item	Equipment	Mfr/Brand	Model/Type No.	Serial No.	Note
1	Phone	Apple	iPhone 12	N/A	This is for testing only in report.
2	Earbuds	Apple AirPods	AirPods 2	N/A	This is for testing only in report.
3	Watch	Apple Watch	S7	N/A	This is for testing only in report.
4	Adapter	Xiaomi	MDY-11-EB	N/A	This is for testing only in report.

Support units

Item	Equipment	Mfr/Brand	Model/Type No.	Serial No.	Note
N/A	N/A	N/A	N/A	N/A	N/A

Note:

(1) The support equipment was authorized by Declaration of Confirmation.
(2) For detachable type I/O cable should be specified the length in cm in 『Length』 column.
(3) “YES” is means “shielded” “with core”; “NO” is means “unshielded” “without core”.

2.4 EQUIPMENTS LIST

Radiation Test equipment

Kind of Equipment	Manufacturer	Type No.	Company No.	Last calibration	Calibrated until
EMI Test Receiver	R&S	ESRP 3	FCS-E001	2023.08.29	2024.08.28
Signal Analyzer	R&S	FSV40-N	FCS-E012	2023.08.29	2024.08.28
Active loop Antenna	ZHINAN	ZN30900C	FCS-E013	2023.08.29	2024.08.28
Bilog Antenna	SCHWARZBECK	VULB 9168	FCS-E002	2023.08.29	2024.08.28
Horn Antenna	SCHWARZBECK	BBHA 9120D	FCS-E003	2023.08.29	2024.08.28
SHF-EHF Horn Antenna (18G-40GHz)	A-INFO	LB-180400-KF	FCS-E018	2023.08.29	2024.08.28
Pre-Amplifier(0.1M-3G Hz)	EMCI	EM330N	FCS-E004	2023.08.29	2024.08.28
Pre-Amplifier (1G-18GHz)	N/A	TSAMP-0518SE	FCS-E014	2023.08.29	2024.08.28
Pre-Amplifier (18G-40GHz)	TERA-MW	TRLA-0400	FCS-E019	2023.08.29	2024.08.28
Temperature & Humidity	HTC-1	victor	FCS-E005	2023.08.29	2024.08.28

Conduction Test equipment

Kind of Equipment	Manufacturer	Type No.	Company No.	Last calibration	Calibrated until
EMI Test Receiver	R&S	ESPI	FCS-E020	2023.08.29	2024.08.28
LISN	R&S	ENV216	FCS-E007	2023.08.29	2024.08.28
LISN	ETS	3810/2NM	FCS-E009	2023.08.29	2024.08.28
Temperature & Humidity	HTC-1	victor	FCS-E008	2023.08.29	2024.08.28

RF Connected Test

Kind of Equipment	Manufacturer	Type No.	Company No.	Last calibration	Calibrated until
Spectrum Analyzer	Keysight	N9020A	FCS-E015	2023.08.29	2024.08.28
Spectrum Analyzer	Agilent	E4447A	MY50180039	2023.08.29	2024.08.28
Spectrum Analyzer	R&S	FSV-40	101499	2023.08.29	2024.08.28

3 CONDUCTED EMISSION MEASUREMENT

3.1 LIMIT

Operating frequency band. In case the emission fall within the restricted band specified on Part 207(a) limit in the table below has to be followed.

FREQUENCY (MHz)	Conducted Emissionlimit (dBuV)	
	Quasi-peak	Average
0.15 -0.5	66 - 56 *	56 - 46 *
0.50 -5.0	56.00	46.00
5.0 -30.0	60.00	50.00

Note:
(1) The tighter limit applies at the band edges.
(2) The limit of " * " marked band means the limitation decreases linearly with the logarithm of the frequency in the range.

3.2 TEST PROCEDURE

The following table is the setting of the receiver

Receiver Parameters	Setting
Attenuation	10 dB
Start Frequency	0.15 MHz
Stop Frequency	30 MHz
IF Bandwidth	9 kHz

a. The EUT was 0.8 meters from the horizontal ground plane and 0.4 meters from the vertical ground plane with EUT being connected to the power mains through a line impedance stabilization network (LISN). All other support equipments powered from additional LISN(s). The LISN provide 50 Ohm/ 50uH of coupling impedance for the measuring instrument.
b. Interconnecting cables that hang closer than 40 cm to the ground plane shall be folded back and forth in the center forming a bundle 30 to 40 cm long.
c. I/O cables that are not connected to a peripheral shall be bundled in the center. The end of the cable may be terminated, if required, using the correct terminating impedance. The overall length shall not exceed 1 m.
d. LISN at least 80 cm from nearest part of EUT chassis.
e. For the actual test configuration, please refer to the related Item –EUT Test Photos.

3.3 TEST SETUP

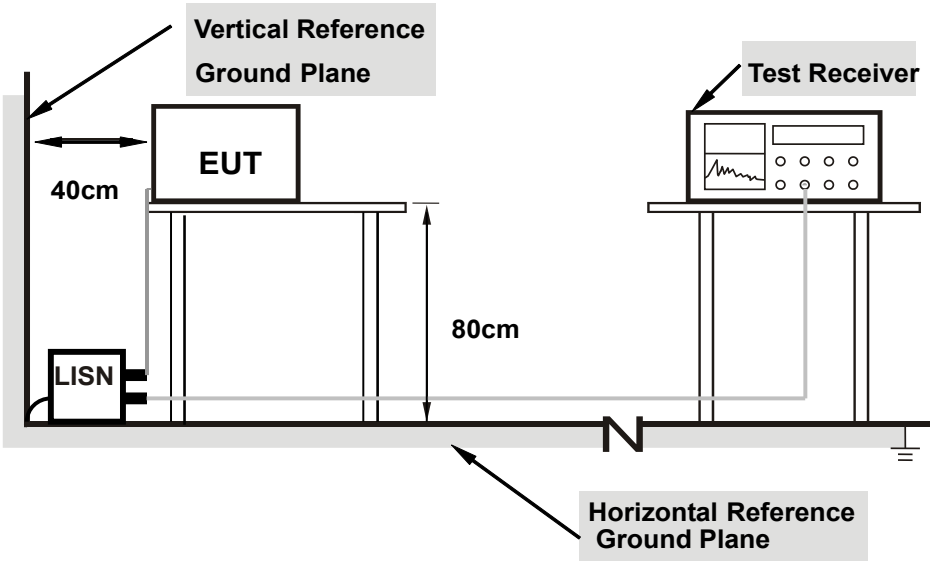

Note: 1.Support units were connected to second LISN.

2.Both of LISNs (AMN) are 80 cm from EUT and at least 80 from other units and other metal planes

3.4 TEST RESULTS

Temperature:	25℃	Relative Humidity:	50%
Test Mode:	Mode 9(Worst)	Test Voltage:	DC 9V
Result:	Pass		

L-line

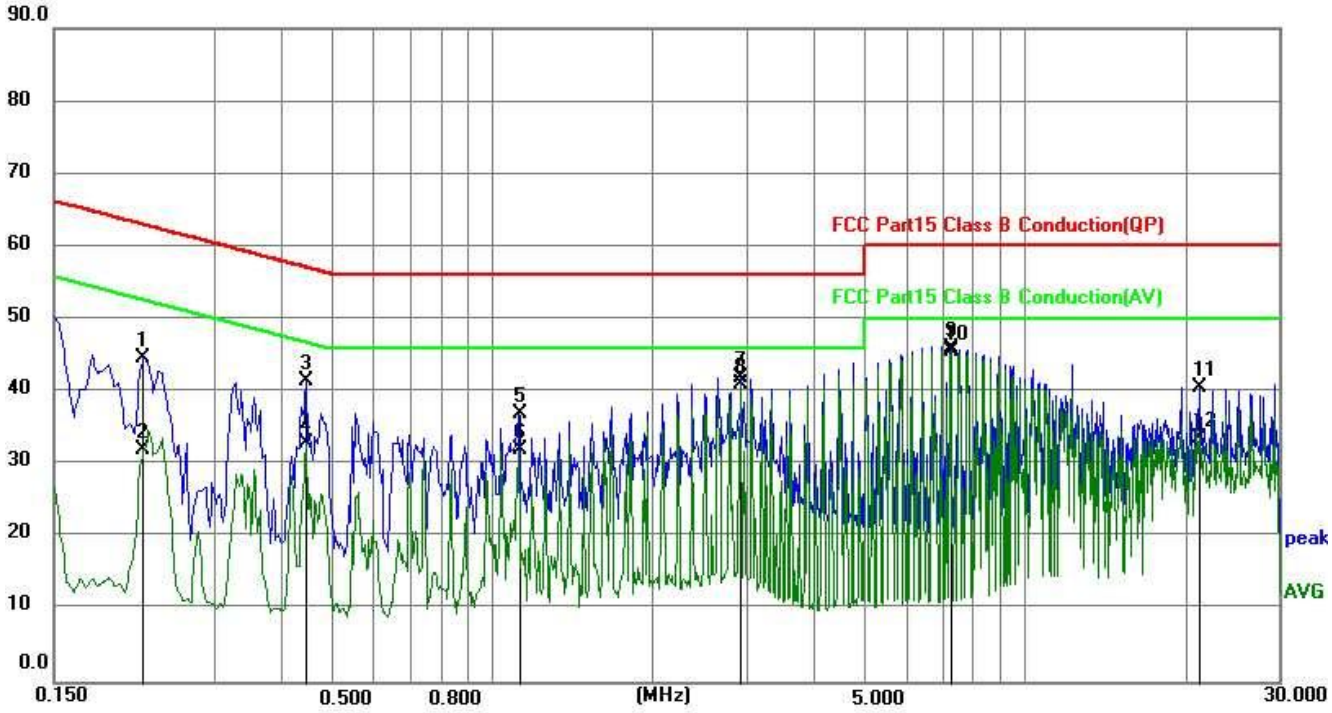

No.	Frequency (MHz)	Reading (dBuV)	Correct Factor(dB)	Result (dBuV)	Limit (dBuV)	Margin (dB)	Remark
1	0.2220	35.22	9.53	44.75	62.74	17.99	QP
2	0.2220	22.61	9.53	32. 14	52.74	20.60	AVG
3	0.4470	31.87	9.55	41.42	56.93	15.51	QP
4	0.4470	23.32	9.55	32.87	46.93	14.06	AVG
5	1. 1174	27.44	9.57	37.01	56.00	18.99	QP
6	1. 1174	22.55	9.57	32. 12	46.00	13.88	AVG
7	2.9310	32.35	9.58	41.93	56.00	14.07	QP
8	2.9310	31.54	9.58	41. 12	46.00	4.88	AVG
9	7.2600	36.42	9.61	46.03	60.00	13.97	QP
10	7.2600	35.86	9.61	45.47	50.00	4.53	AVG
11	21.3270	30.84	9.76	40.60	60.00	19.40	QP
12	21.3270	23.99	9.76	33.75	50.00	16.25	AVG

N-line

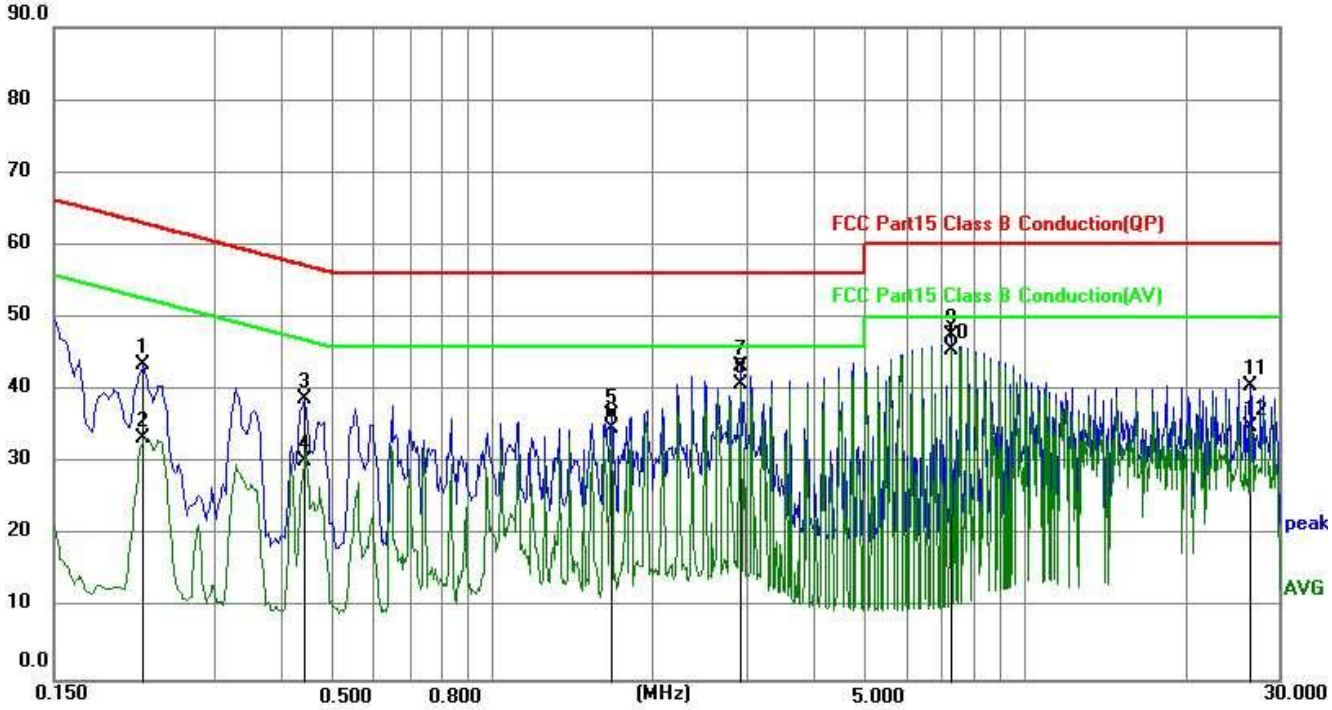

No.	Frequency (MHz)	Reading (dBuV)	Correct Factor(dB)	Result (dBuV)	Limit (dBuV)	Margin (dB)	Remark
1	0.2220	34.02	9.53	43.55	62.74	19. 19	QP
2	0.2220	23.83	9.53	33.36	52.74	19.38	AVG
3	0.4425	29.22	9.55	38.77	57.01	18.24	QP
4	0.4425	20.73	9.55	30.28	47.01	16.73	AVG
5	1.6754	26.91	9.58	36.49	56.00	19.51	QP
6	1.6754	25.21	9.58	34.79	46.00	11.21	AVG
7	2.9355	33.71	9.60	43.31	56.00	12.69	QP
8	2.9355	31.28	9.60	40.88	46.00	5. 12	AVG
9	7.2600	37.79	9.75	47.54	60.00	12.46	QP
10	7.2600	35.85	9.75	45.60	50.00	4.40	AVG
11	26.5155	30.78	9.85	40.63	60.00	19.37	QP
12	26.5155	25.03	9.85	34.88	50.00	15. 12	AVG

4. RADIATED EMISSION MEASUREMENT

4.1 LIMIT

In any 100 kHz bandwidth outside the operating frequency band. In case the emission fall within the Restricted band specified on Part15.205(a)&209(a) limit in the table and according to ANSI C63.10-2013 below has to be followed

LIMITS OF RADIATED EMISSION MEASUREMENT (0.009mhz - 1000mhz)

Frequencies (MHz)	Field Strength (micorvolts/meter)	Measurement Distance (meters)
0.009~0.490	2400/F(KHz)	300
0.490~1.705	24000/F(KHz)	30
1.705~30.0	30	30
30~88	100	3
88~216	150	3
216~960	200	3
Above 960	500	3

Notes:

(1) The limit for radiated test was performed according to FCC PART 15C.
(2) The tighter limit applies at the band edges.
(3) Emission level (dBuV/m)=20log Emission level (uV/m).
(4) Distance refers to the distance in meters between the measuring instrument antenna and the EUT
(5) The emission limits shown in the above table are based on measurements employing a CISPR quasi-peak detector except for the frequency bands 9-90 kHz, 110-490 kHz. Radiated emission limits inthese three bands are based on measurements employing an average detector.

4.2 TEST PROCEDURE

Spectrum Parameter	Setting
Attenuation	Auto
Detector	Peak/AV
Start Frequency	1000 MHz(Peak/AV)
Stop Frequency	10th carrier hamonic(Peak/AV)
RB / VB (emission in restricted band)	PK=1MHz / 1MHz, AV=1 MHz /10 Hz

a. The measuring distance of at 3 m shall be used for measurements at frequency 0.009MHz up to 1GHz,and above 1GHz.
b. The EUT was placed on the top of a rotating table 0.8 meters (above 1GHz is 1.5 m) above the ground at a 3 meter anechoic chamber test site. The table was rotated 360 degrees to determine the position of the highest radiation.
c. The height of the equipment shall be 0.8 m(above 1GHz is 1.5 m); the height of the test antenna shall vary between 1 m to 4 m. horizontal and vertical polarizations of the antenna are set to make the measurement.
d. The initial step in collecting conducted emission data is a spectrum analyzer peak detector mode pre-scanning the measurement frequency range. Significant peaks are then marked and then QuasiPeak detector mode re-measured.
e. If the Peak Mode measured value compliance with and lower than Quasi Peak Mode Limit, the EUT shall be deemed to meet QP Limits and then no additional QP Mode measurement performed.
f. For the actual test configuration, please refer to the related Item –EUT Test Photos.

Note:
Both horizontal and vertical antenna polarities were tested. The worst case emissions were reported

4.3 TEST SETUP

(A) Radiated Emission Test-Up Frequency Below 30MHz

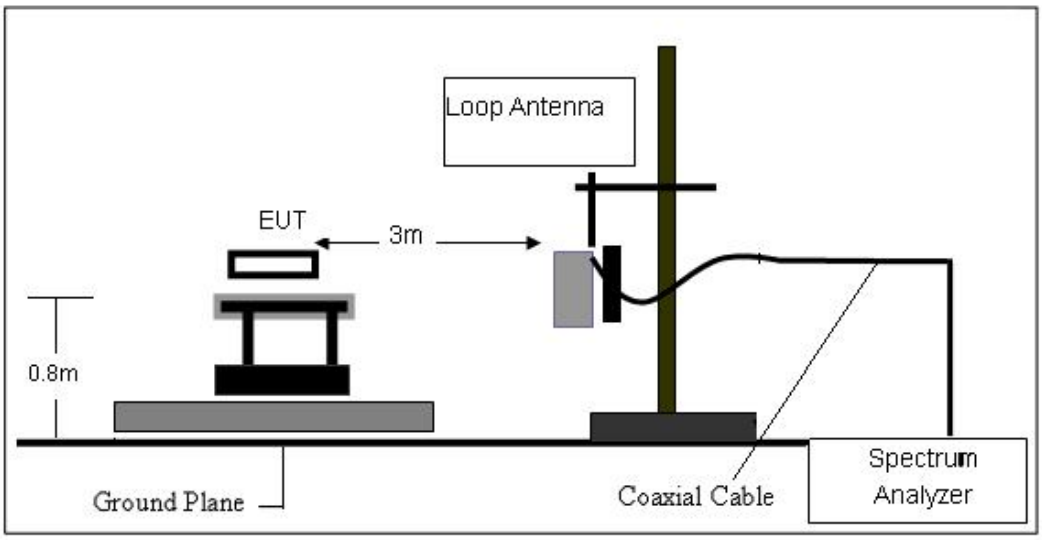

(B) Radiated Emission Test-Up Frequency 30MHz~1GHz

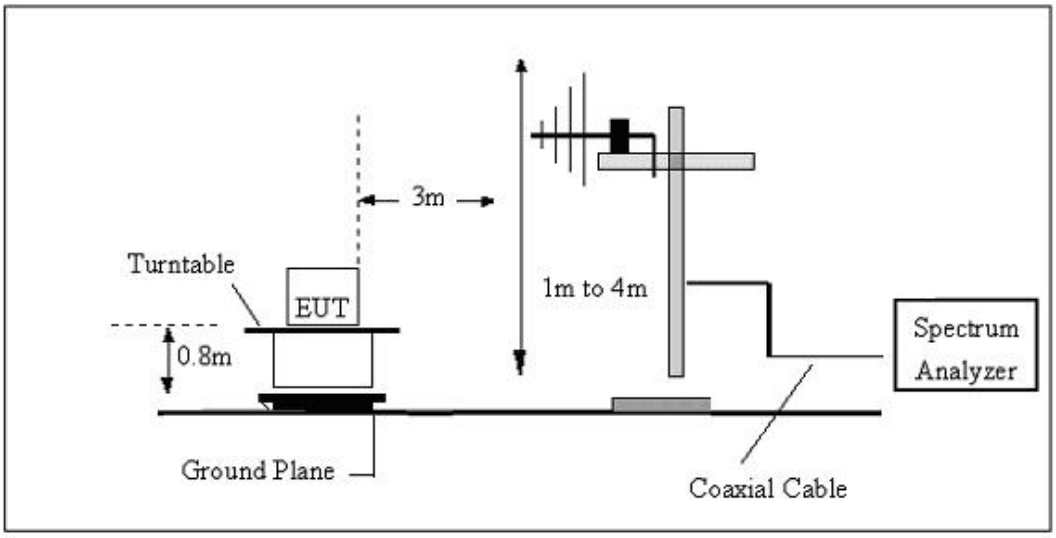

(C) Radiated Emission Test-Up Frequency Above 1GHz

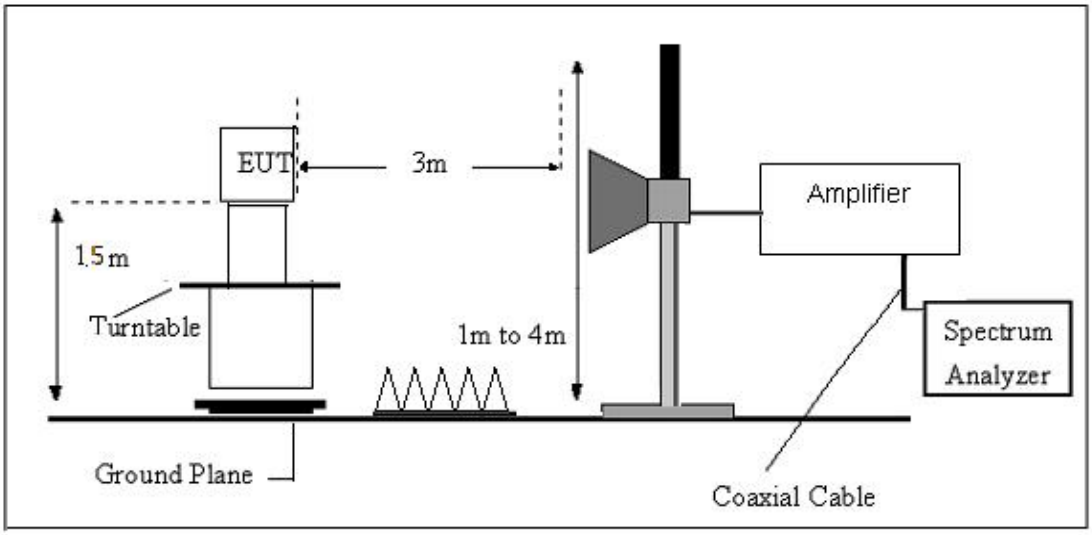

4.4 TEST RESULTS

For spurious emission

(9KHz-30MHz)

Temperature:	23.7℃	Relative Humidity:	61%
Test Voltage:	DC 9V	Phase:	Vertical
Test Mode:	Mode 9(Worst)		

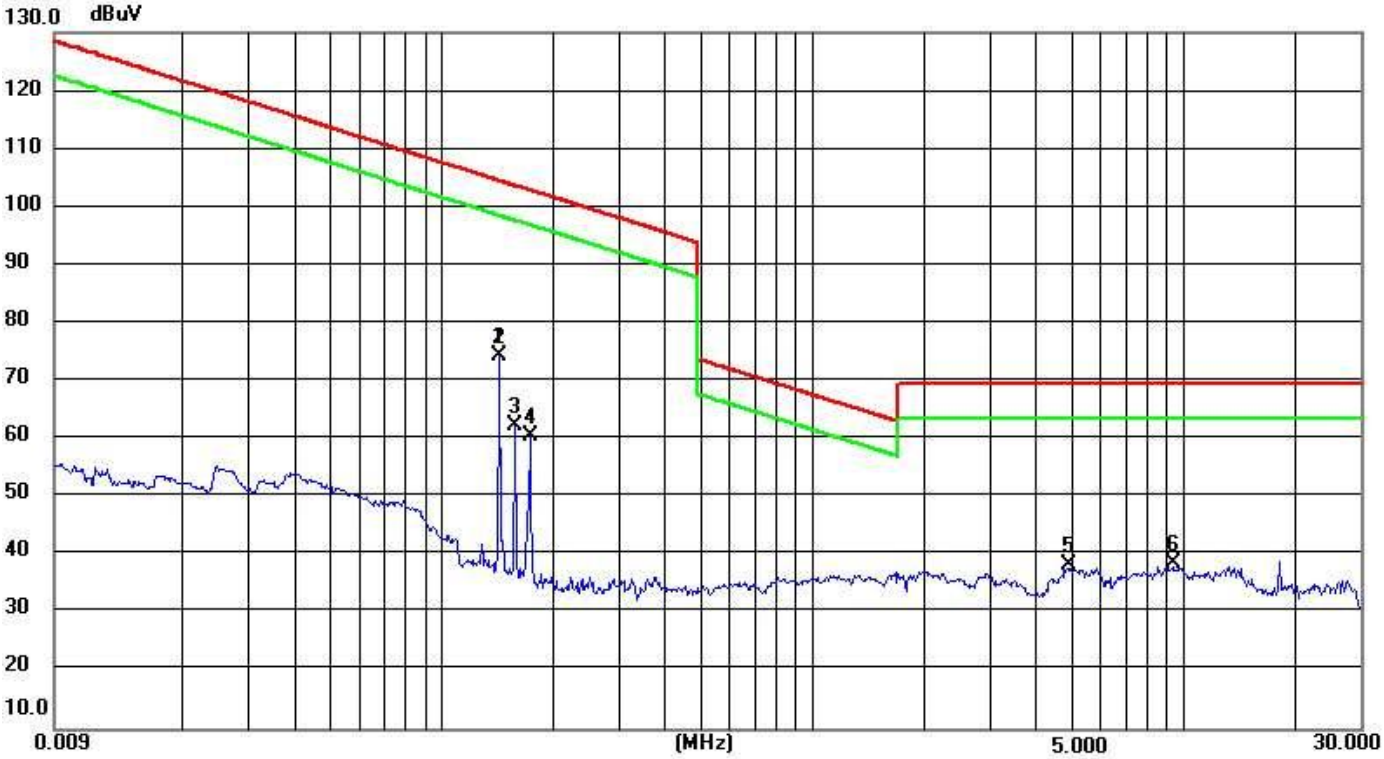

No.	Frequency (MHz)	Reading (dBuV)	Factor (dB)	Level (dBuV)	Limit (dBuV)	Margin (dB)	Detector
1	0.1450	74.50	10.12	84.62	104.50	-19.88	AV
2	0.1430	74.50	10.22	84.72	104.50	-19.78	AV
3	0.1575	62.32	10.30	72.62	103.67	-31.05	AV
4 *	0.1723	60.55	10.39	70.94	102.89	-31.95	AV
5	4.8752	38.39	10.45	48.84	69.50	-20.66	QP
6	9.3285	38.58	12.86	51.44	69.50	-18.06	QP

Remarks:

1. Final Level =Receiver Read level + Factor

2.The emission limits shown in the above table are based on measurements employing a CISPR quasi-peak detector except for the frequency bands 9-90 kHz, 110-490 kHz. Radiated emission limits inthese three bands are based on measurements employing an average detector

(30MHZ-1000MHZ)

Temperature:	23.7℃	Relative Humidity:	61%
Test Voltage:	DC 9V	Phase:	Horizontal
Test Mode:	Mode 9(Worst)		

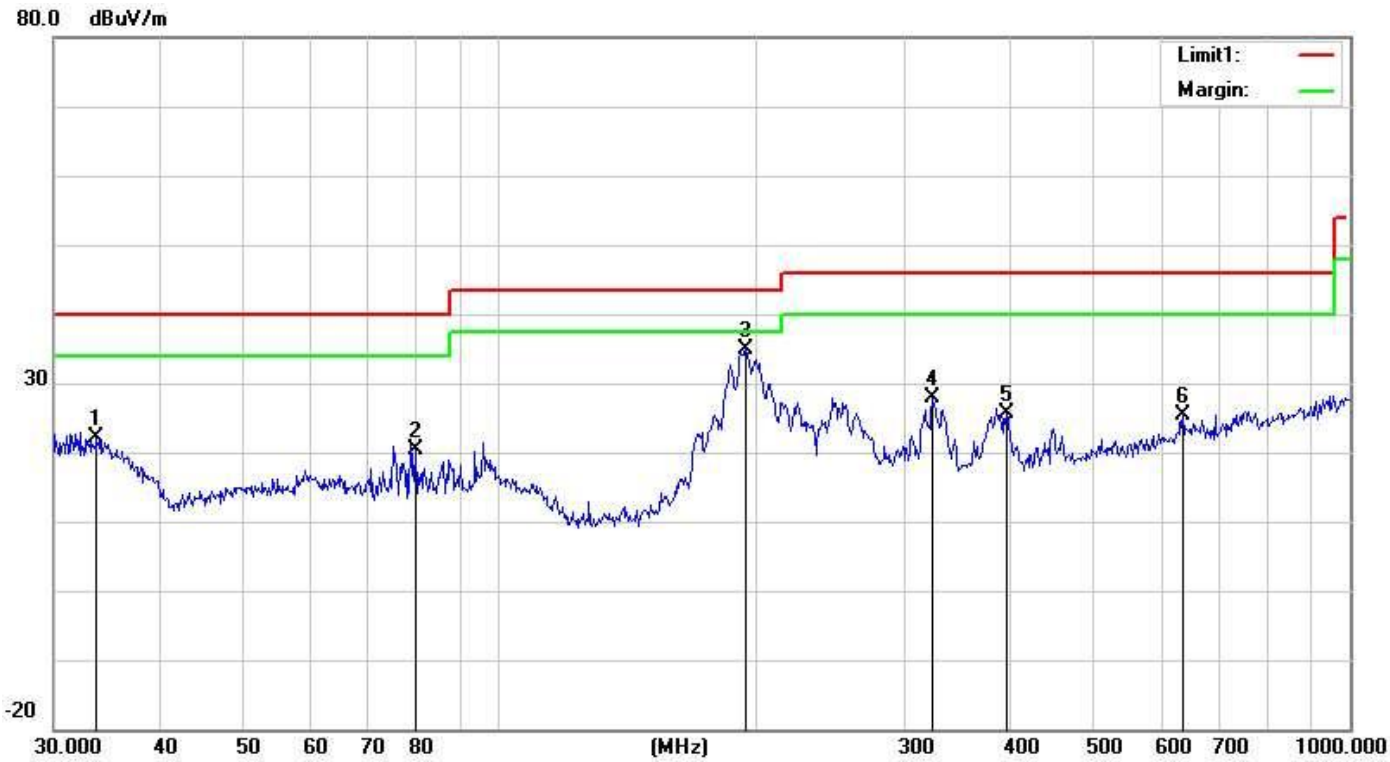

No.	Frequency (MHz)	Reading (dBuV)	Correction (dB/m)	Result (dBuV/m)	Limit (dBuV/m)	Margin (dB)	Remark
1	33.6802	37.45	- 15.40	22.05	40.00	- 17.95	QP
2	79.8002	42.19	-21.90	20.29	40.00	- 19.71	QP
3	195.1365	51.20	- 16.44	34.76	43.50	-8.74	QP
4	323.3204	41.09	- 13.21	27.88	46.00	- 18. 12	QP
5	394.8544	38.54	- 12.86	25.68	46.00	-20.32	QP
6	636.1340	32.66	-7. 16	25.50	46.00	-20.50	QP

Remarks:
1. Final Level =Receiver Read level + Factor

Temperature:	22.7℃	Relative Humidity:	61%
Test Voltage:	DC 9V	Phase:	Vertical
Test Mode:	Mode 9(Worst)		

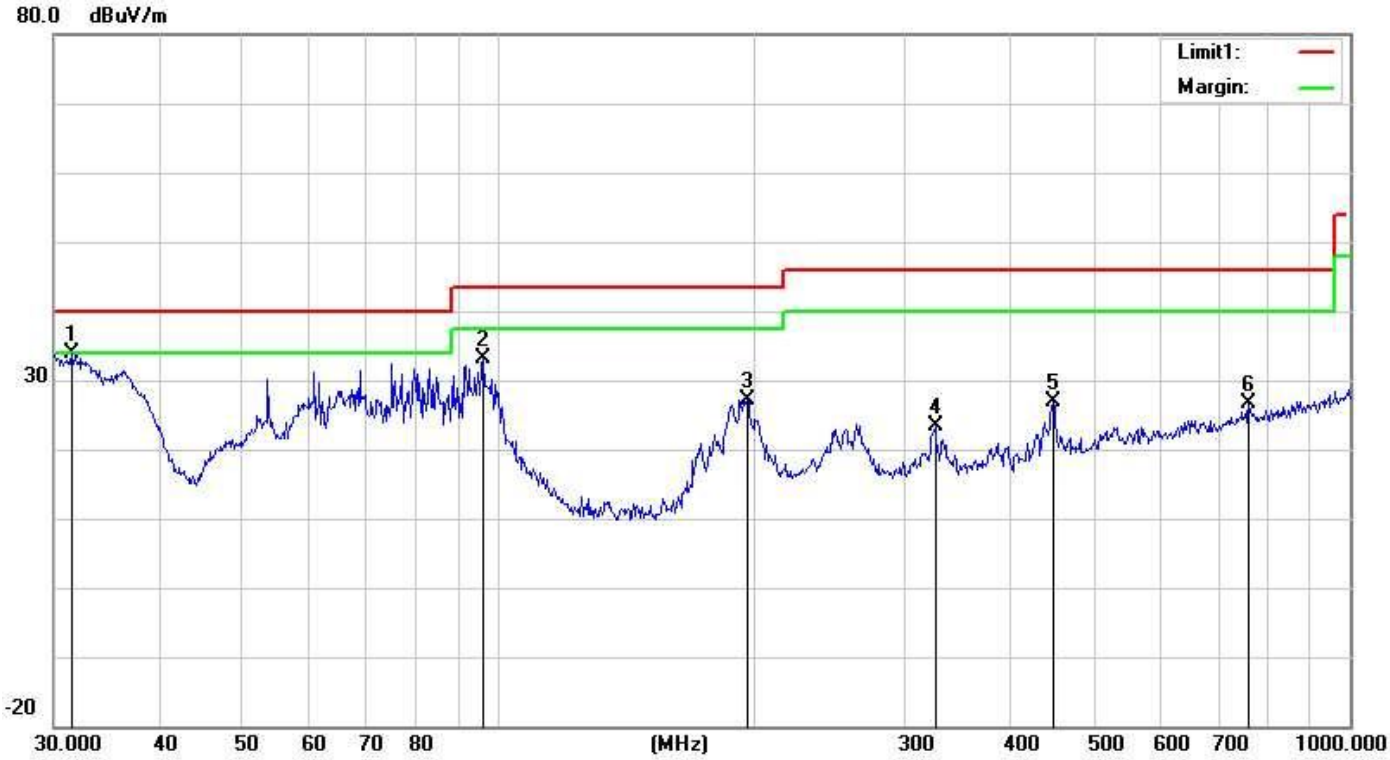

No.	Frequency (MHz)	Reading (dBuV)	Correction (dB/m)	Result (dBuV/m)	Limit (dBuV/m)	Margin (dB)	Remark
1	31.5094	47.82	- 14.05	33.77	40.00	-6.23	QP
2	95.7622	52.15	- 18.98	33.17	43.50	- 10.33	QP
3	195.8220	43.45	- 16.31	27.14	43.50	- 16.36	QP
4	325.5957	36.54	- 13. 14	23.40	46.00	-22.60	QP
5	447.9821	37.79	- 11.03	26.76	46.00	- 19.24	QP
6	760.7036	31.36	-4.84	26.52	46.00	- 19.48	QP

Remarks:
1. Final Level =Receiver Read level + Factor

5. 20 DB BANDWIDTH TEST

5.1 LIMIT

According to 15.215 (c) Intentional radiators operating under the alternative provisions to the general emission limits, as contained in § 15.217 through 15.257 and in Subpart E of this part, must be designed to ensure that the 20 dB bandwidth of the emission, or whatever bandwidth may otherwise be specified in the specific rule section under which the equipment operates, is contained within the frequency band designated in the rule section under which the equipment is operated. The requirement to contain the designated bandwidth of the emission within the specified frequency band includes the effects from frequency sweeping, frequency hopping and other modulation techniques that may be employed as well as the frequency stability of the transmitter over expected variations in temperature and supply voltage. If a frequency stability is not specified in the regulations, it is recommended that the fundamental emission be kept within at least the central 80% of the permitted band in order to minimize the possibility of out-of-band operation

5.2 TEST PROCEDURE

a. Check the calibration of the measuring instrument using either an internal calibrator or a known signal from an external generator

b. Position the EUT without connection to measurement instrument. Turn on the EUT and connect it to measurement instrument. Then set it to any one convenient frequency within its operating range. Set a reference level on the measuring instrument equal to the highest peak value.

c. Measure the frequency difference of two frequencies that were attenuated 20 dB from the reference level. Record the frequency difference as the emission bandwidth.

5.3 TEST SETUP

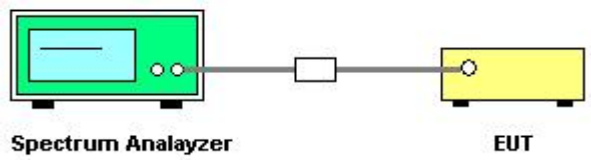

5.4 TEST RESULTS

Temperature:	25℃	Relative Humidity:	50%
Test Mode:	Mode 9(Worst)	Test Voltage:	DC 9V

Frequency (KHz)	20dB Bandwidth (Hz)	Result
145.2	1529	PASS

Headset Coil

Frequency (KHz)	20dB Bandwidth (Hz)	Result
145.2	1526	PASS

Phone Coil 1

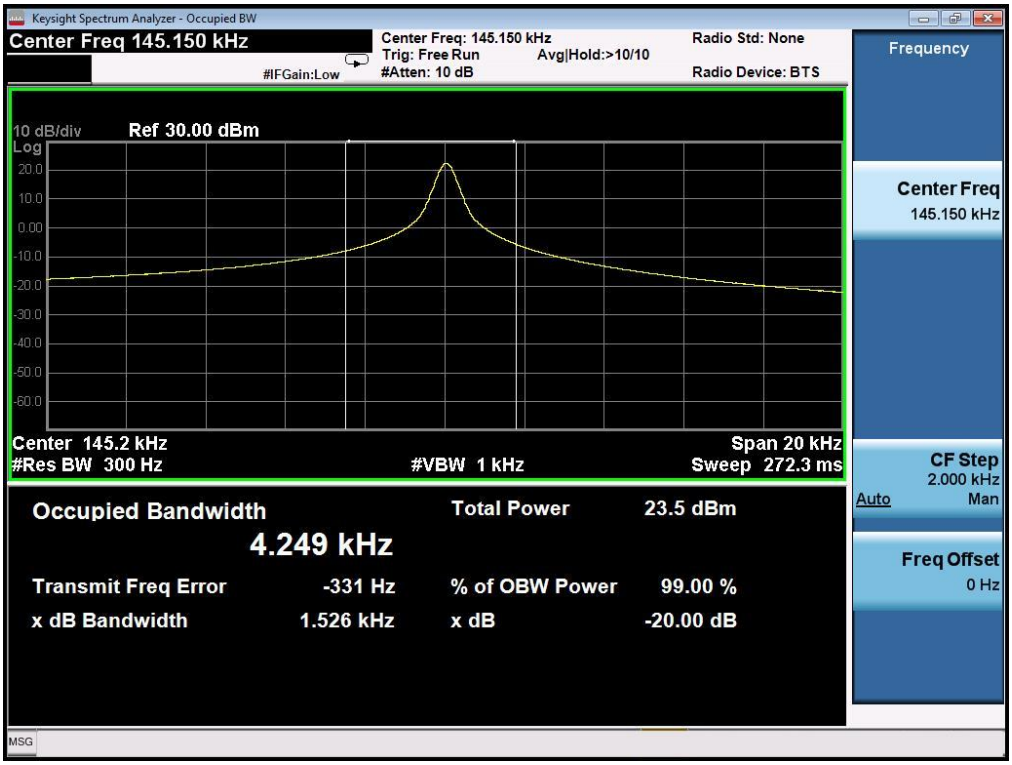

Frequency (KHz)	20dB Bandwidth (Hz)	Result
145.2	1490	PASS

Watch Coil

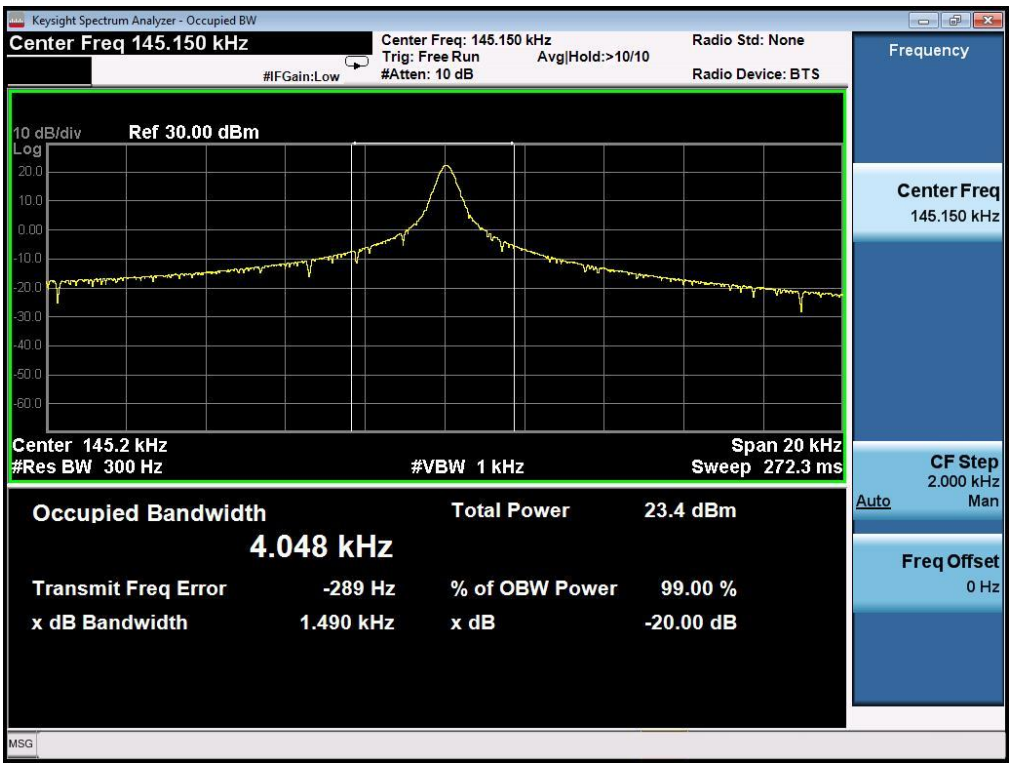

6. ANTENNA REQUIREMENT

6.1 STANDARD REQUIREMENT

15.203 requirement: For intentional device, according to 15.203: an intentional radiator shall be designed to ensure that no antenna other than that furnished by the responsible party shall be used with the device.

6.2 EUT ANTENNA

The antennas used for this product is Inductive Loop Antenna and no other than that furnished by the responsible party shall be used with the device, the maximum peak gain of the transmit antenna is 1.0dBi.

※※※※※END OF THE REPORT※※※※※