EXHIBIT 2 - EUT EXTERNAL PHOTOGRAPHS

EUT View 1	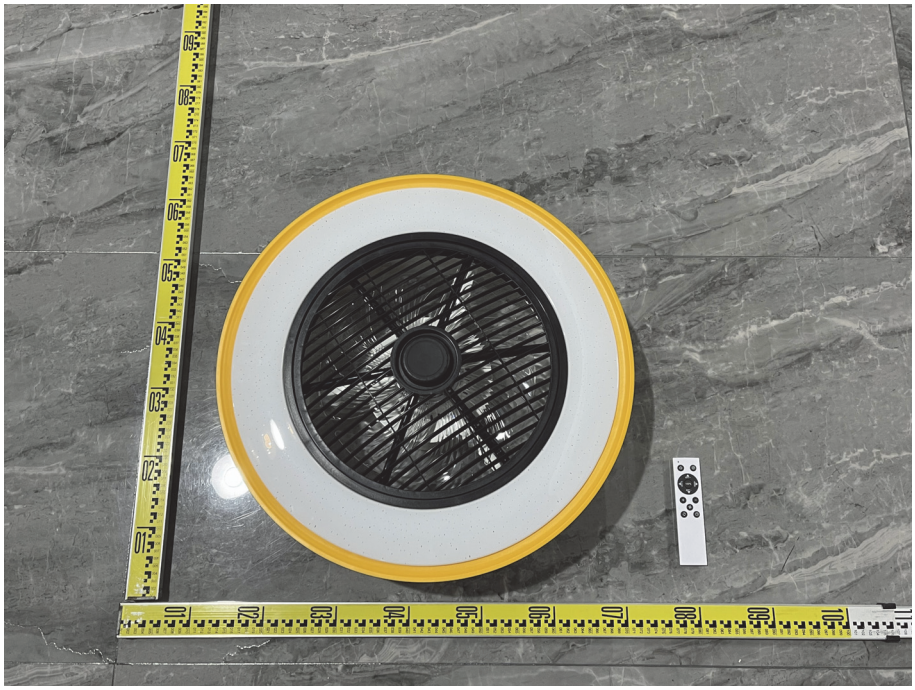
EUT View 2	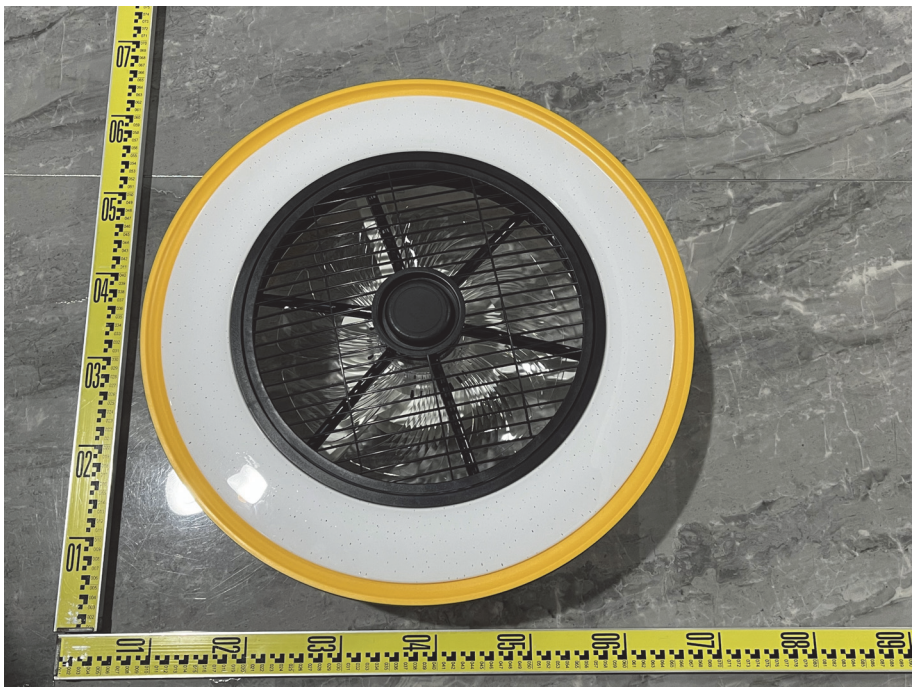

EUT View 3	
EUT View 4	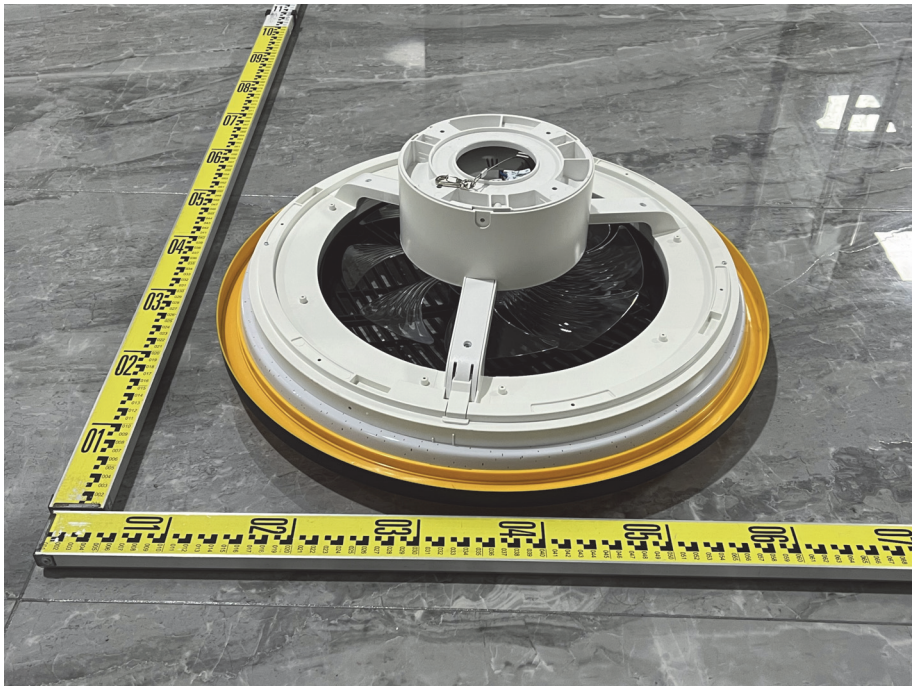

EUT View 5	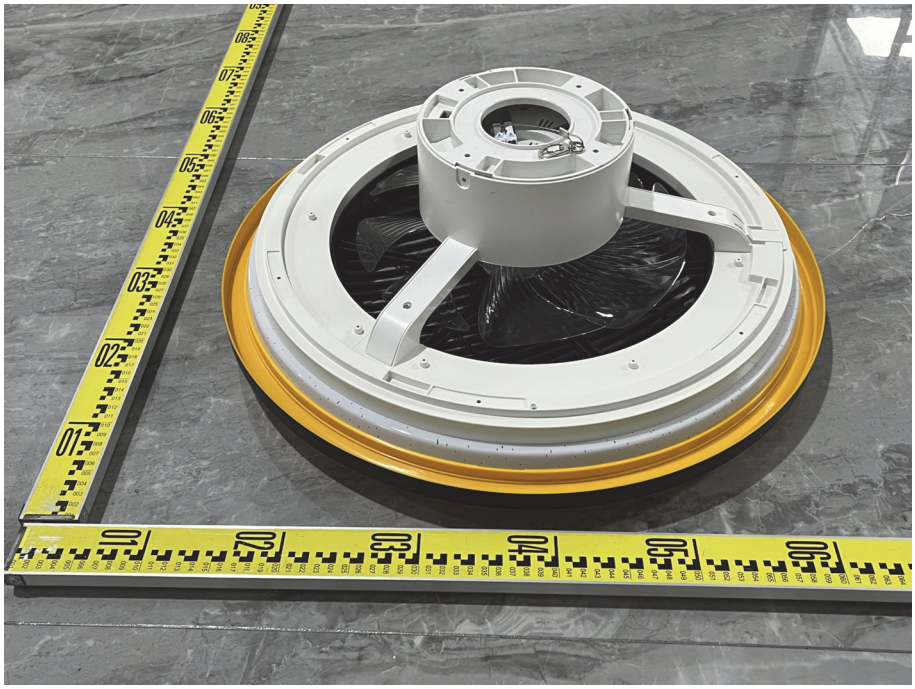
EUT View 6	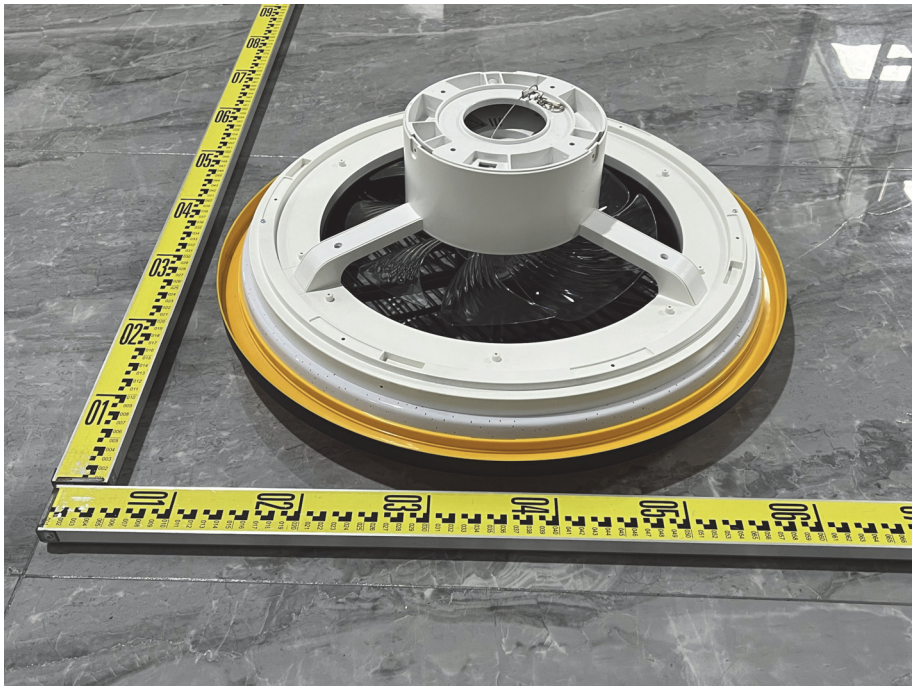
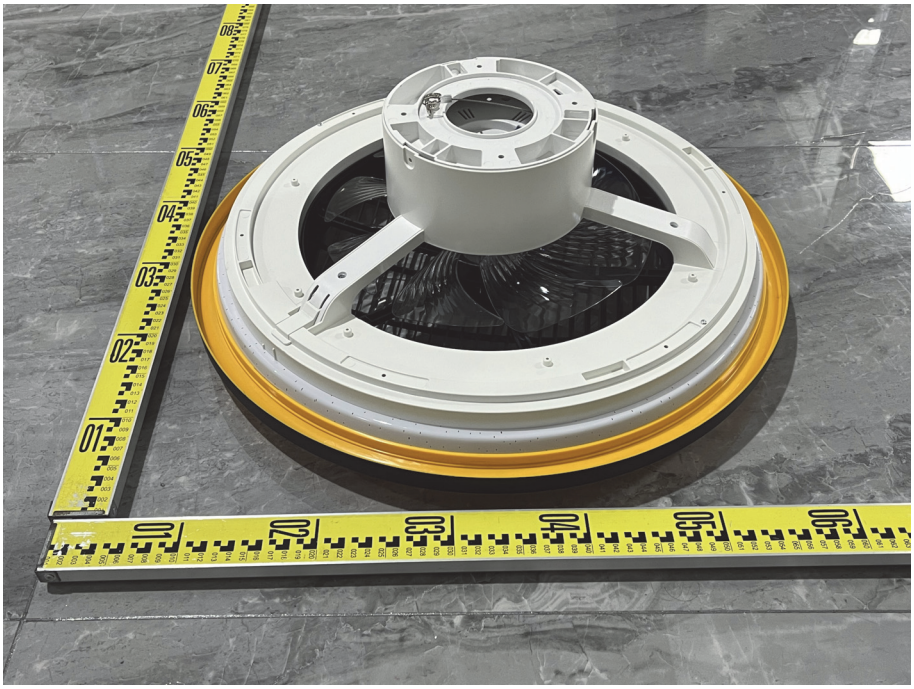
EUT View 7