Lixel L1

User Manual

User Manual Contents

目录

Product Overview 1

Operation 2

1、Battery installation 2

2、Tripod Installation 3

3、Function Button 3

1）Download the APP 3

2） Activate equipment 4

3） Equipment connection process 5

4、 Equipment scanning process 7

Indicator Light Description 8

Data Copy Description 9

Battery 10

Maintenance 11

Matters needing attention 11

Appendix 12

Specification 12

FCC Warning 13

Product Overview

Lixel L1, a highly integrated and lightweight handheld 3D reconstruction device. With the 3D real-time reconstruction algorithm, Lixel L1 can directly obtain the true color point cloud. The results are calculated in real time and can be viewed and used immediately.

Lixel L1 provides a variety of optional accessories, such as 5G module, RTK, UAV onboard pail, carrying system, etc. It is easier to operate and applies to various scenarios.

About Lixel L1

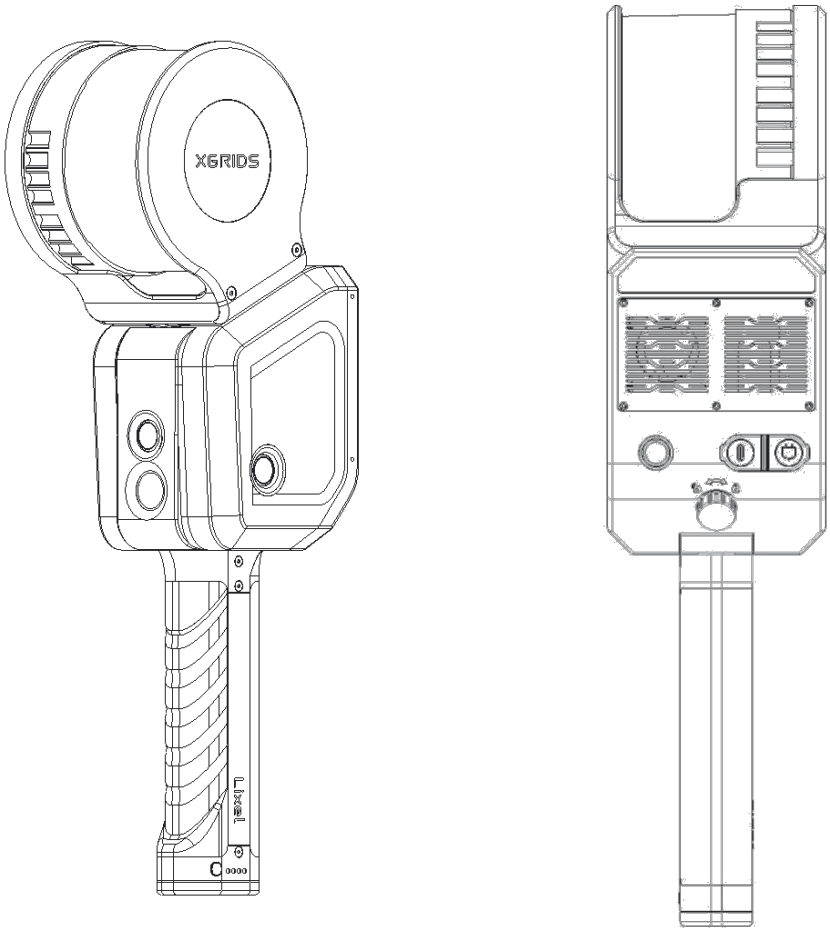

Operation

1、Battery installation

1.Turn the battery lock switch counterclockwise.
2.Insert the battery into the bottom of the device along the guide dovetail slot. Ensure that the battery is inserted into the correct position.
3.Turn the battery lock switch clockwise to lock the battery.

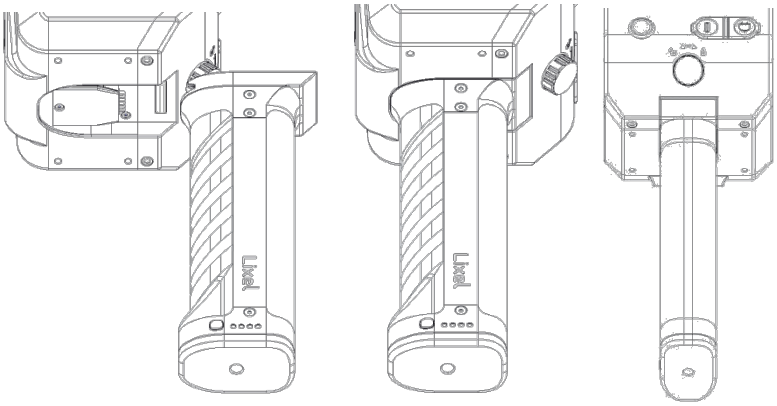

Note: An unsecured battery may cause the device to slip.

2、Tripod Installation

The bottom of the battery has threaded holes. Screw the tripod in and place the device in a flat position.

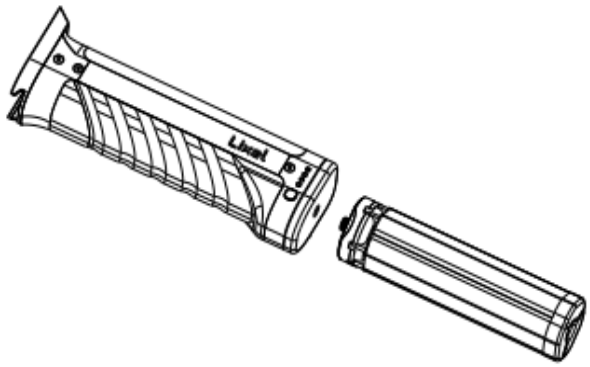

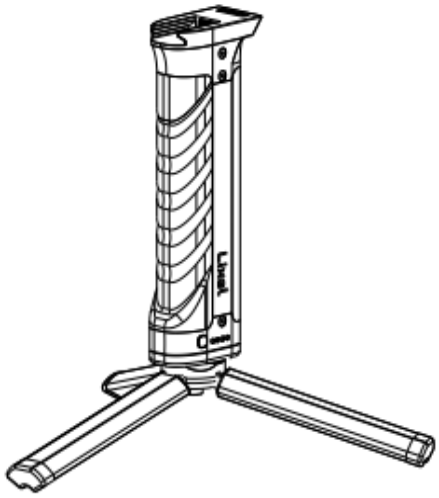

3、Function Button

1）Download the APP

We need to download a specific APP-Lixel Go on our mobile phone before starting it. See below for the connection:

LixelGo_debug 1.0.3.221028.alpha.apk.1

（1）Click on the software, and first complete the login/registration operation. See the picture below for details.

Login interface

（2）After successful login, enter the home page, and there is no device connection at this time.

(without device connection)

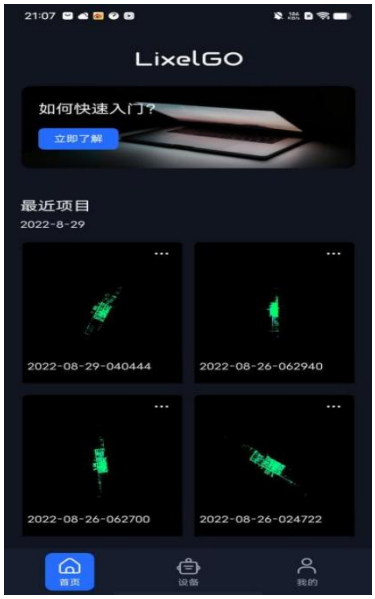

2）Activate equipment

To use Lingguang Lixel L1 for the first time, you need to connect your mobile phone and activate it through APP(Lixel Go).Install the equipment according to items 1 and 2 of the description title.

（1）Open：Press and hold the power-on button for about 4 seconds.The indicator light flashes slowly by the blue light.When the blue light turns green, the boot is successful.

（2）Open the Lixel Go APP on your mobile phone, click "device"-"activate device", and scan the QR code of the body-activation succeeded.

Note: When activating the device, it is necessary to connect the device once after successful activation to complete the whole activation process. If only half of the activation process is completed, the device can only be activated by the mobile phone scanning the activation code. If this phone can't be used for special reasons, please contact customer service.

3）Equipment connection process

Click the middle key "Device" below-search for a device.The APP will pop up an interface "Please connect your device WIFI"

Open the WLAN interface of the mobile phone and find the WiFi name of the device: Lixel- (the last 6 digits of the device code) such as Lixel-bdf8df. Click Connect，Enter the password xgrids3d set by the factory to connect.（The last 6 digits of the code can be seen on the APP when it is activated.）

See the picture below for details.

Go back to the APP interface and click the "Connect button" on the pop-up box to use it.

Function	Operation	State
Open	Long press 4 seconds	The indicator light turns from slow blinking blue light to steady green light;
Close	Long press 4 seconds	Indicator light off;
Start Scanning	Double Click	When the device is in standby state, double-click the indicator. The indicator status changes from steady green to blinking green at short intervals and then to blinking green at long intervals. And the lidar starts to rotate, that is, the scan is started successfully.
Stop Scanning	Double Click	When scanning, double click the button, the indicator state will change from green slow flashing to green quick flashing and then to steady green. Meanwhile, the lidar will stop rotating and the scanning will be stopped successfully.

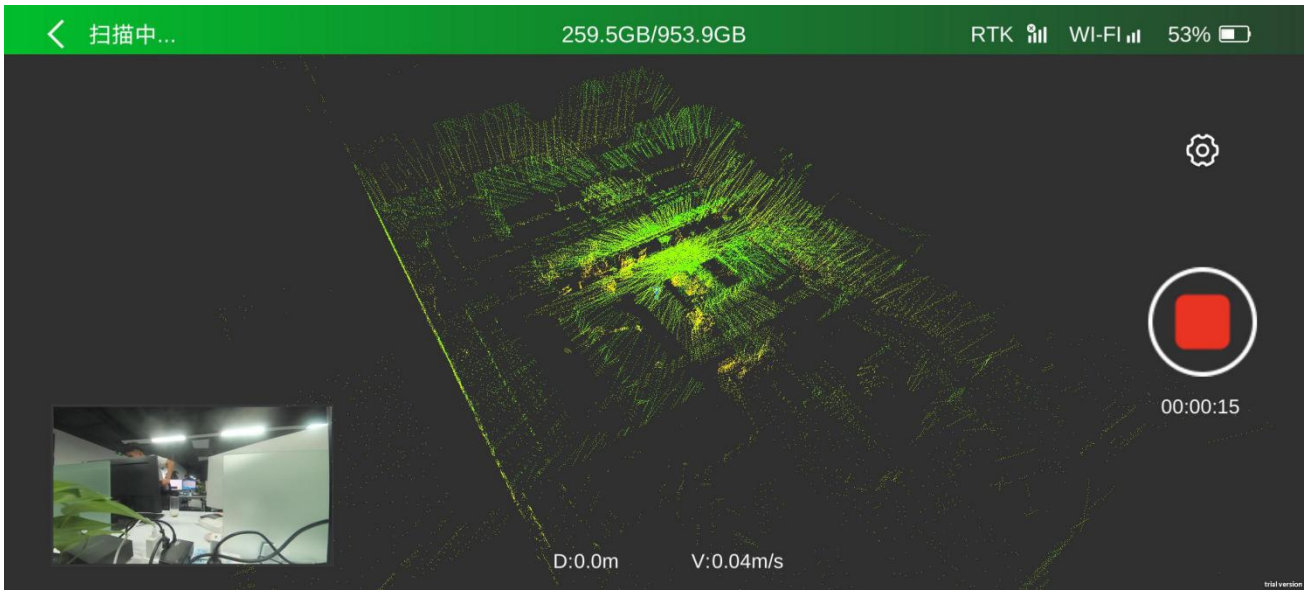

4、Equipment scanning process

Scanning interface description:

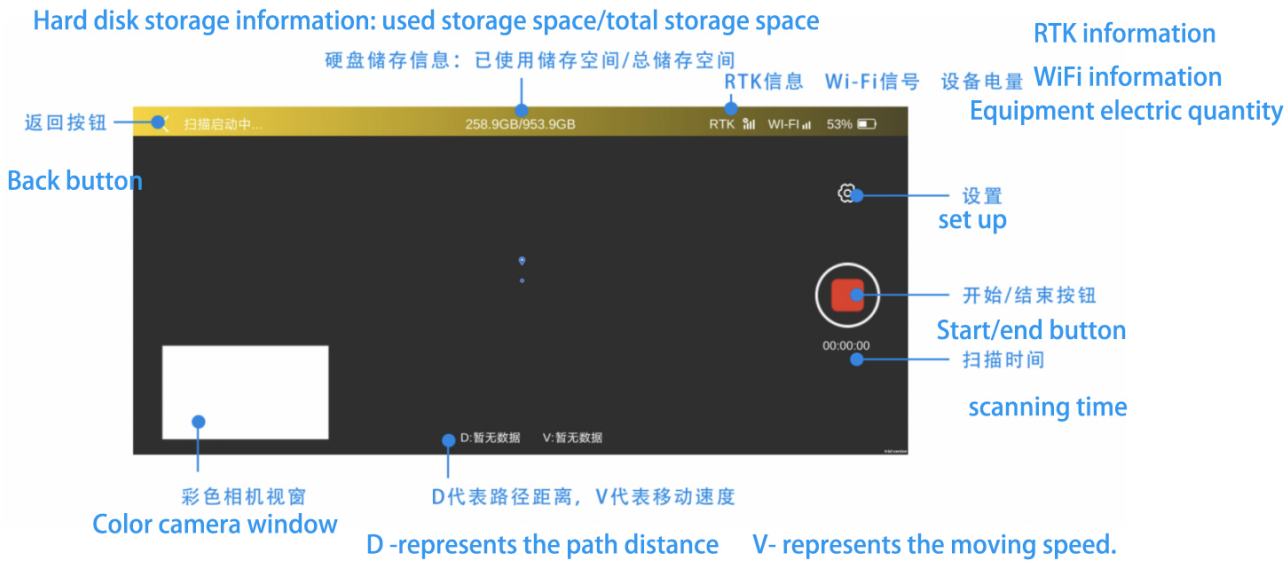

After the equipment is connected successfully, click the Start button on the interface.

When the equipment is started, the radar starts to rotate, and when the equipment starts scanning, real-time trajectory, elevation/color point clouds and real-time captured images appear on the interface.

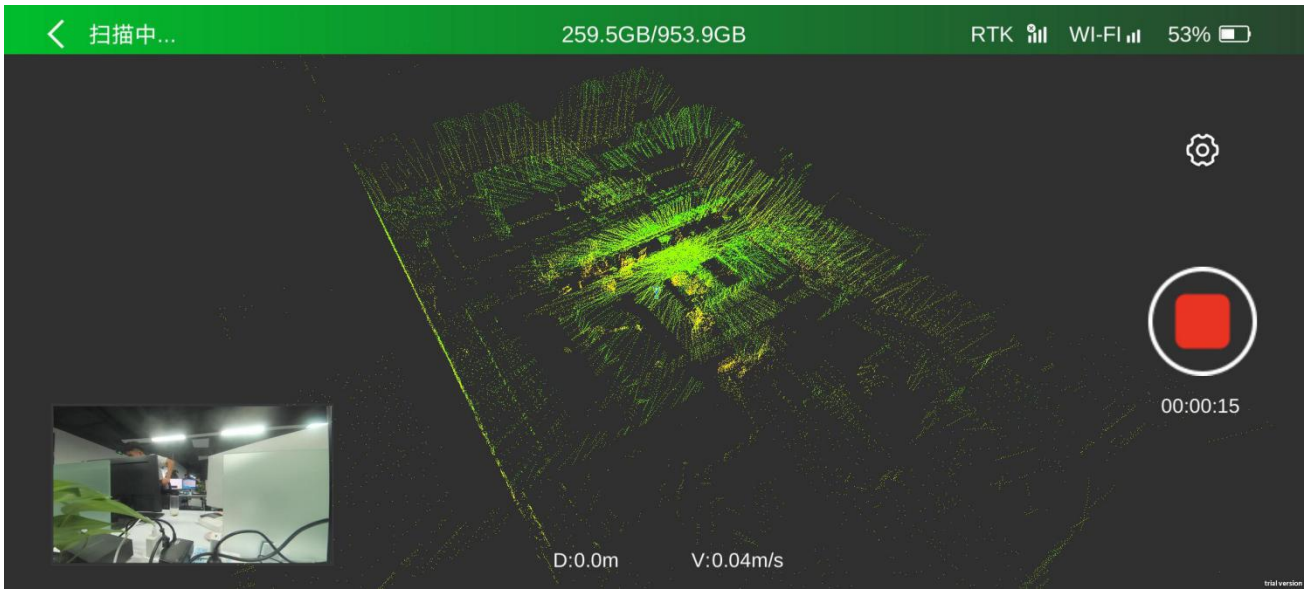

Note:

1 Please put the device on the flat table before starting the scan. After starting the scan, the device can be moved for scanning only after the lidar rotates.
2 It takes about 10 seconds to start scanning.
3 During the scanning stop, if the indicator blinks green quickly, scanned files are being stored. If the power is off at this time, files may be lost or saved incompletely.
4 After the scan is stopped, the waiting time for stored files may be long, it's depending on the size of the scene being scanned.

Indicator Light Description

Indicator blinking status	Significance
None	The device is not started.

The blue light blinking slowly	The device is starting up.
Blue light normally on	USB disk mode
Green light normally on	The device is in standby state
The green light blinking fast	The scan is being started/stopped
The green light blinking slowly	Scaning
Yellow light normally on	The device is not activated
Red light normally on	Serious device failure

Data Copy Description

Use the USB cable that matches the device. Connect the device to the computer in standby mode and turn on the USB mode in the App. After identifying the device, the data can be copied.

Note:

1 The USB mode is automatically disabled after a restart.

2 After turning on the USB mode, you need to manually turn off the USB mode if you want to continue scanning without shutting down or power off.

3 Using a non-standard USB cable may cause slow data copy. Or may cause forward insertion can be used, reverse insertion can not be used.

Battery

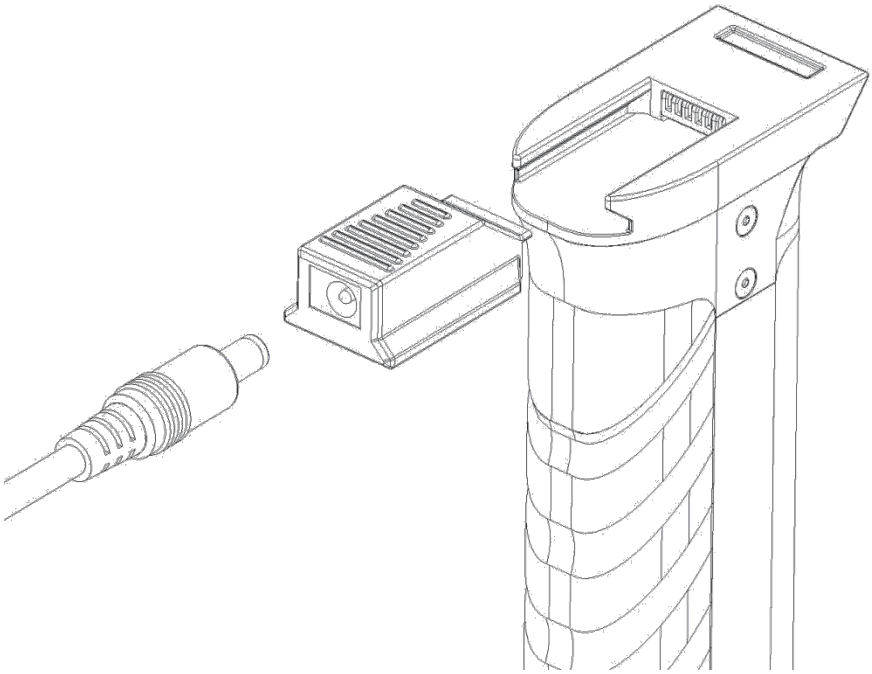

Use the standard charging cable and connect the charging adapter to the battery to charge the battery.

Charging time: about 2 hours. During the charging process, the indicator light will show the current electric quantity. Please refer to the following table for details.

Indicator blinking status	electricity
Only one green light on	0-24%
Two green lights on	25%-49%
Three green lights on	50%-74%
Four green lights on	75%-99%

Maintenance

The storage status of the device is as shown in the figure below. After use, remove the battery and put it back into the storage box according to the figure.

Note: It is a precision device, not storing as required may cause damage to the device.

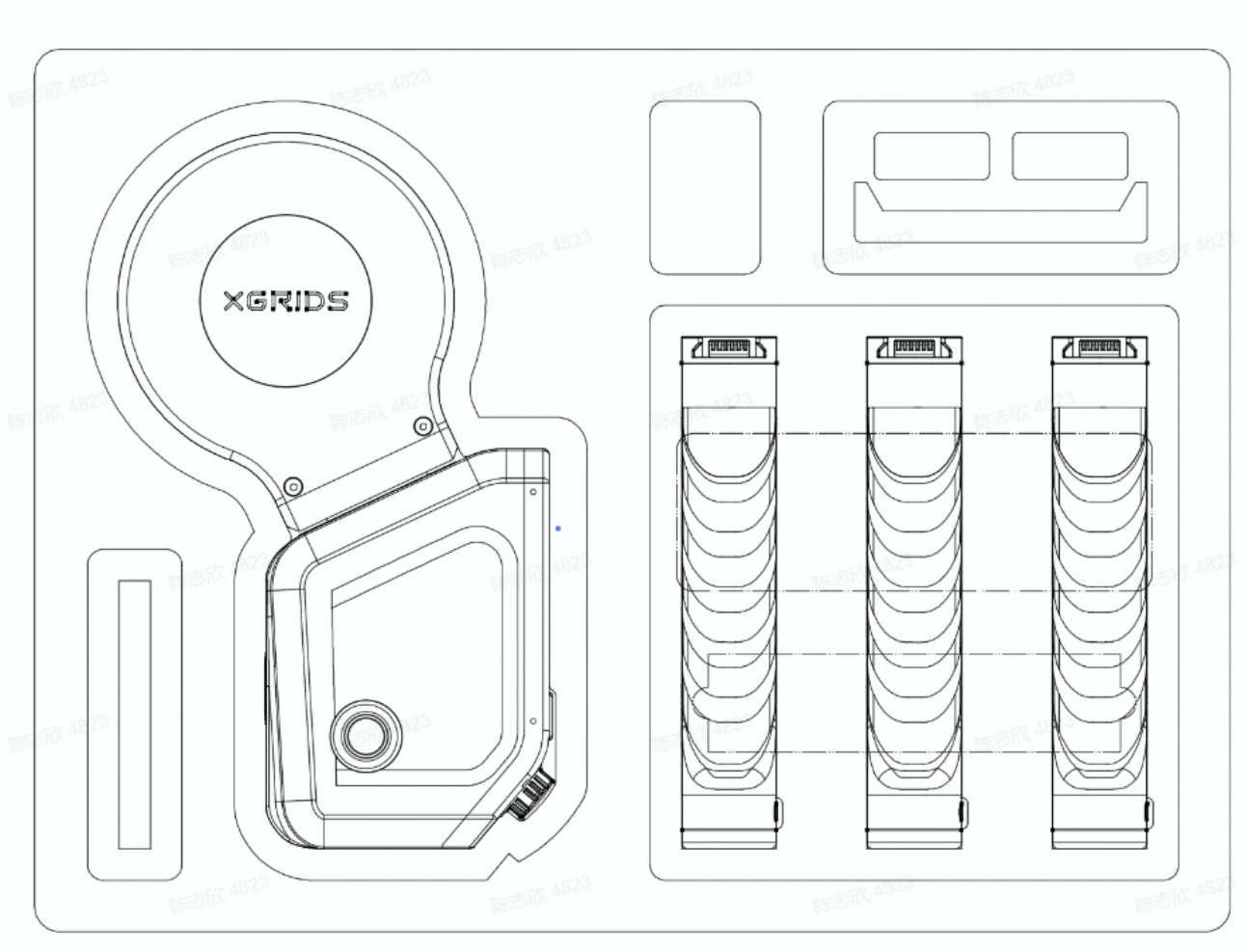

Matters needing attention

1.Lixel L1 is a precision device. Falling or being hit by external forces may damage the equipment and result in abnormal or inaccurate accuracy.
2. When using a tripod, ensure that the tripod and the device are tightened to prevent the device from falling.
3.Ensure that after Lixel L1 is turned on, lidar rotation is not blocked by external forces.
4.Lixel L1 waterproof grade is IP54, do not use in the environment beyond this protection grade. Use a soft dry cloth or standard cleaning cloth to clean the device. Keep the lidar clean and do not touch it directly.
5. Please keep the camera clean and do not touch it with your hands to avoid affecting the picture effect.
6.The device will generate heat during use. Please do not touch the fuselage to avoid burns.
7.Do not cover or touch the heat sink during use. The device may automatically shut down when the temperature

is too high.

8.When connecting the device through the App, please hold the phone and device separately to avoid falling.

9.If other external equipment such as RTK is connected, it is recommended to match the carrying system to reduce the burden and facilitate the operation.

Appendix

Specification

Parameter	XGRIDS
In put	14.4V
Power	<30W
Size	138mm*90mm*381mm
weight	About 1.9kg
Data socket	USB 3.1 Gen2
Internal storage	1T SSD
Wireless module	Support
Operating Temp Range	-20℃~50℃
IP level	IP54
Shell material	aviation aluminum
Power supply	Removable integrated battery
Single usage duration	1.5h
Battery capacity	46.8wh
Camera Quantity	4
Visually assisted positioning	Support
APP WIFI distance	20 M without interference
The laser line number	16
Laser level	Class 1 / 903nm
Relative accuracy	<2cm

Repeat accuracy	<1cm
Scan effective distance	100m
FOV	360° ×270°
Scanning mode	Mobile
Point cloud frequency	300000 points /s
Environmental requirements	Indoor/Outdoor
Single working duration	60mins
Resume breakpoint	Support

Product after-sales information
Please check the XGRIDS website www.xgrids.cn for the latest after-sales information.

FCC Warning

This device complies with Part 15 of the FCC Rules. Operation is subject to the following two conditions:
(1) This device may not cause harmful interference, and (2) this device must accept any interference received, including interference that may cause undesired operation.

NOTE 1: This equipment has been tested and found to comply with the limits for a Class B digital device, pursuant to part 15 of the FCC Rules. These limits are designed to provide reasonable protection against harmful interference in a residential installation. This equipment generates, uses and can radiate radio frequency energy and, if not installed and used in accordance with the instructions, may cause harmful interference to radio communications. However, there is no guarantee that interference will not occur in a particular installation. If this equipment does cause harmful interference to radio or television reception, which can be determined by turning the equipment off and on, the user is encouraged to try to correct the interference by one or more of the following measures:
- Reorient or relocate the receiving antenna.
- Increase the separation between the equipment and receiver.
-Connect the equipment into an outlet on a circuit different from that to which the receiver is connected.
-Consult the dealer or an experienced radio/TV technician for help.

NOTE 2: Any changes or modifications to this unit not expressly approved by the party responsible for compliance could void the user's authority to operate the equipment.

RF Exposure Statement
To maintain compliance with FCC'S RF Exposure guidelines, This equipment should be installed and operated with minimum distance of 20mm the radiator your body. This device and its antenna(s) must not be co-located or operation in conjunction with any other antenna or transmitter.