735 Wireless

Controller User Manual

735

★ Product Description

1. This product supports the SWITCH/PC/Android/iOS platform.
2. External replaceable BL-5C lithium battery.
3. The left and right light strips can be controlled to change color or turn off.
4. Illuminated ABXY key.
5. Dual motor vibration and supports 5-level motor speed regulation.
6. Support the gyroscope function on and off, and the SWITCH is on by default.
7. Supports real-time gyroscope and manual gyroscope settings.
8. Support TURBO function settings and speed debugging.
9. Supports back key recording.
10. Support the NFC function
11. Support app keying.
12. Supports direct connection to apps

★ Functional indication

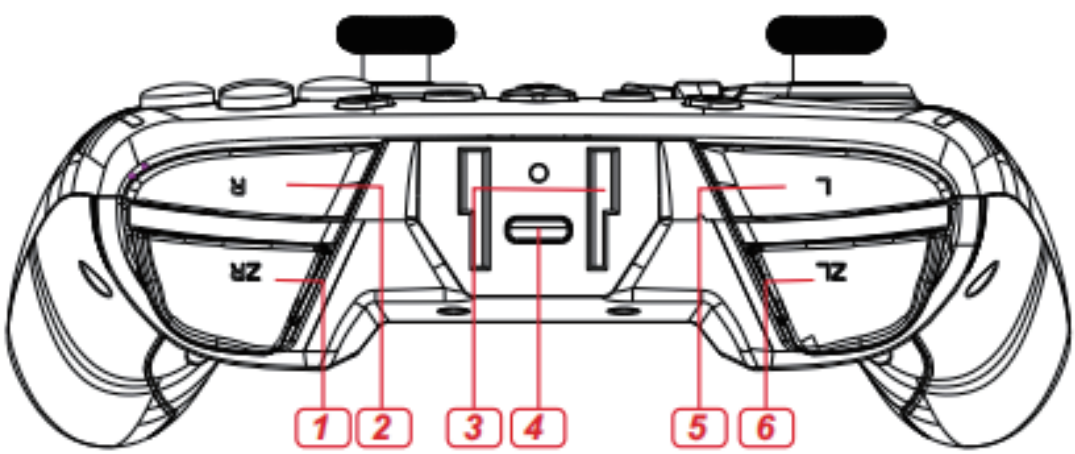

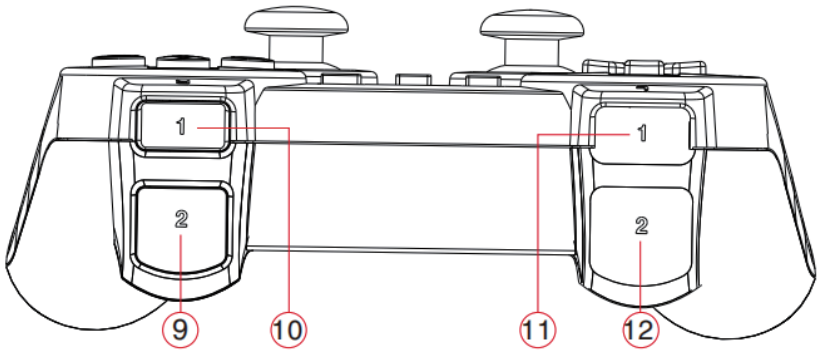

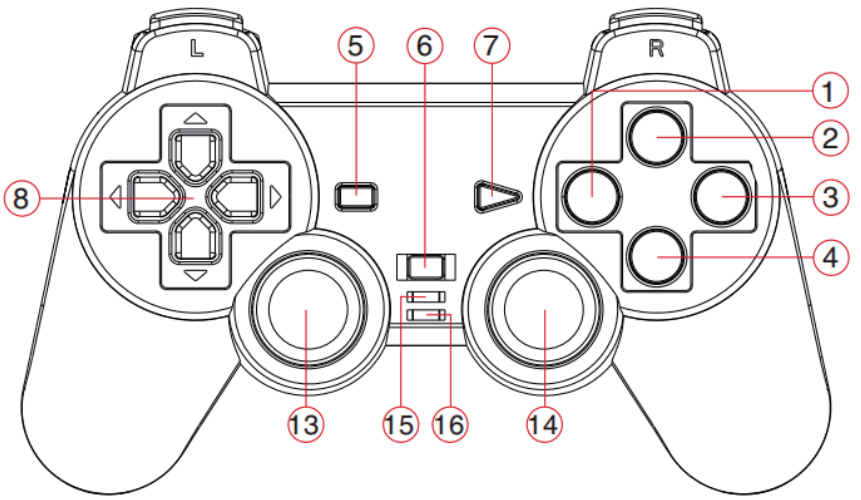

1. ZR function key.
2. R function key.
3. Mobile phone holder slot
4. TYPE-C wired connection USB and charging USB
5. L function key
6. ZL function key
7. - key, select key button
8. Camera button on the SWITCH platform
9. HOME key, wake-up key, mode key.
10. TURBO key.
11. +key, pause start key.
12. X function key.
13. Left and right light strips
14. A function key
15. B function key

16. Y function key
17. Left and right rocker light rings
18. Right joystick, press down on the R3 function key
19. Channel light and the charging light
20. Left joystick, press down on the L3 function key
21. Square key
22. Reset button.
23. Left Back Button
24. Battery compartment
25. Charging Stand Contact
26. Gyro key, gyroscope setting button.
27. Right Back Button
28. Battery cover switch

★、For Switch Game Console

1、Wired connection

Place the Switch console into the Switch base and connect the USB and controller of the Switch base through the data cable inside the packaging box. After connecting, the controller channel light 1 will slowly flash and the controller will charge. After unplugging the data cable, the controller automatically connects to the host via Bluetooth.

2、Wireless connection

Wireless connection can be used when the controller does not have a data cable; Turn the SWITCH console to the Bluetooth connection interface (as shown in the figure below)

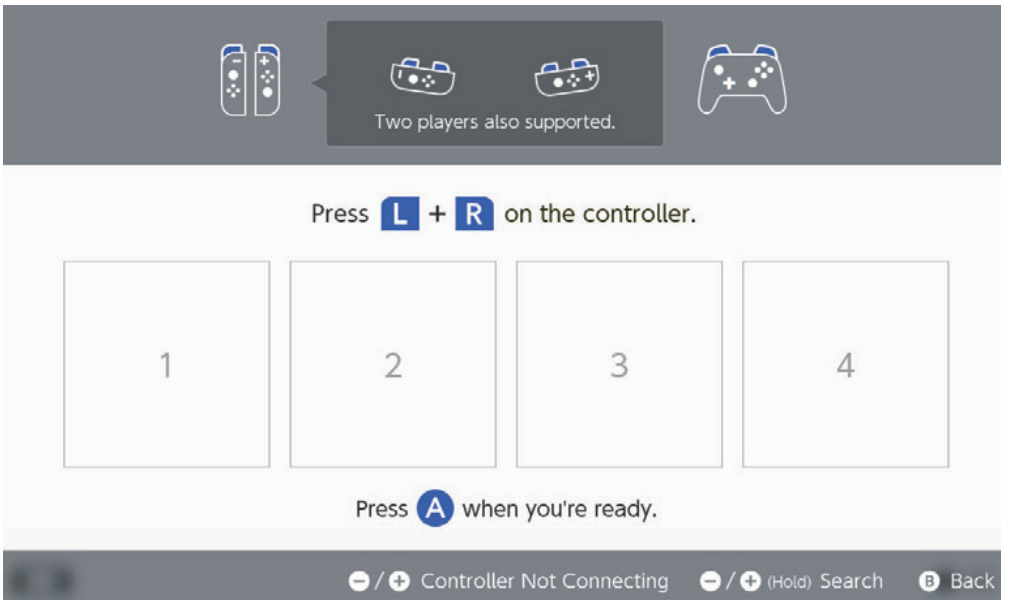

Press the HOME button for about 3 seconds when the controller is not awakened, and the channel light will search for Bluetooth signals in the form of a running light.
When the connection is successful, a controller icon will appear in the following image. Press the A button according to the reminder.

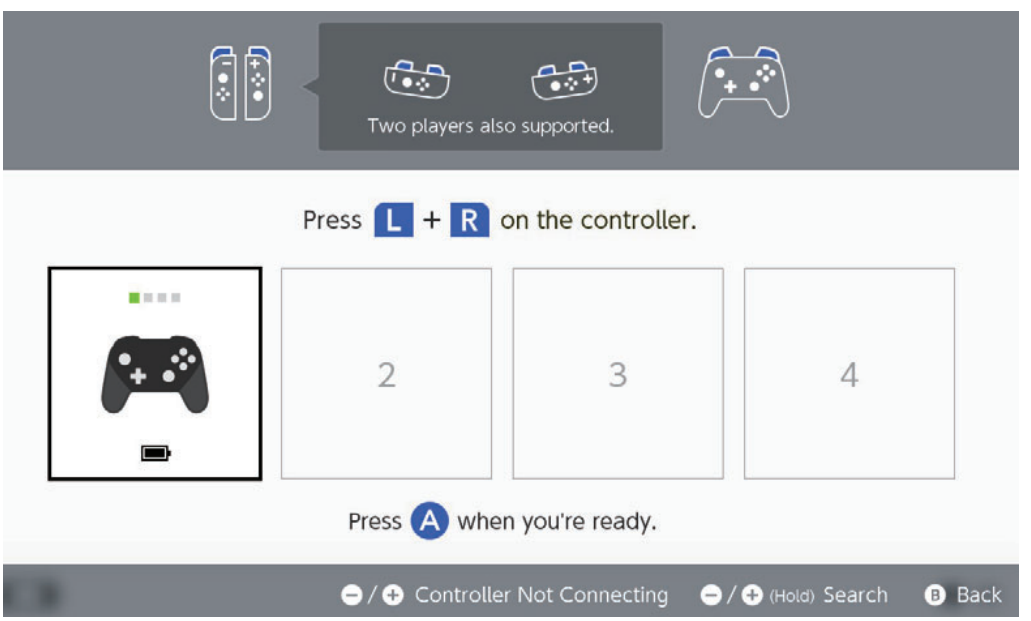

3. TURBO key settings

3.1. The buttons with additional continuous shooting functions include the cross key A B X Y L1 L2 L3 R1 R2 R3

3.2. Turbo+function button: The first time this button enters continuous shooting, the second time it enters automatic continuous shooting, and the third time it releases continuous shooting; After setting the continuous shooting function, the light circle flashes with the frequency of continuous shooting; Note: When entering fully automatic continuous shooting, the handle will not enter sleep.

3.3. Continuous shooting speed 8 (initial)/15/25 times/second.

3.4. The continuous shooting speed can be adjusted up and down through the T+left joystick. Each time the continuous shooting speed is set, the RGB light circle corresponding to the color of the light flashes at the set speed frequency.

3.5. Clear all continuous shots at once, press and hold the T key for about 5 seconds, and the corresponding color of the RGB light circle will flash 3 times before canceling all automatic continuous shots and continuous shooting functions.

3.6. Press and hold the HOME key for 5 seconds to close the handle. After the handle is turned off, it retains the burst speed/burst and automatic burst.

3.7 Replace the connection platform, clear all automatic burst and burst functions, and restore the initial values.

4. Backkey settings

4.1. The default left and right back keys are the ZL/ZR keys.

4.2. The back button can record content. Cross keys (up, down, left, right) A B X Y L1 L2 L3 R1 R2 R3

4.3. Press the T+left back button simultaneously for 3 seconds to enter the left back button recording; Simultaneously press

the T+right back button for 3 seconds to enter the recording of the right back button; The RGB light circle corresponding to the color of the light slowly flashes into recording; After recording the required buttons, if the recording is using the left back button, press the left back button to exit the motor vibration reminder.
4.4. If a single button is input during recording, it is a single button mapping, and the mapping between single buttons supports the TURBO function.
4.5. If there is no operation within 60 seconds after entering programming, the automatic end programming back key function remains unchanged.
4.6. Close and restart the handle, and still save the content recorded by the current platform's back button.
4.7. At that time, press the -/+/T keys together for about 3 seconds to clear all settings.

5. Vibration settings

5.1. The vibration intensity is 0/30%/70%/100%, with a default of 70%
5.2. The vibration amplitude can be adjusted up and down through the T+right joystick; Increase the vibration intensity on the T+right joystick, and decrease the vibration intensity below the T+right joystick.

6. Left and right rocker calibration

6.1 If the left and right joystick cannot reach the maximum value during product use, which is reflected in the game as the inability to automatically run or slow down movement speed, we can calibrate and repair the joystick.
6.2. When the "T" and "-" buttons are pressed simultaneously

for about 3 seconds, the green light in the light circle flashes to enter the joystick calibration. The left and right joystick draw the maximum circle to obtain the maximum value and then press the - key to exit the calibration. The left and right joystick will obtain the maximum value and new center point position from the new one.

7. Gyro calibration

7.1. The gyroscope is in the default state.
7.2. Gyroscope calibration: Press the "T" and "+" keys simultaneously for about 3 seconds, and the green light will flash to enter the gyroscope calibration. Place the handle flat on the desktop (the handle can be padded and placed flat), and then press the "T" and "+" keys to complete the operation.

8. NFC function

Firstly, connect the SWITCH host to the network, and before entering the game, turn on the amiibo function. According to the NFC operation of the game, swipe the NFC card near the HOME key of the controller, and the game will drop items.

9. Turn off or on the light bar, and simultaneously press the - and+keys for 2 seconds to turn off the left and right light bars.

10. Change the color of the light bar, while pressing the - and+keys to change the color of the light bar.

11. Turn off or on the light circle, and simultaneously press the - and L3 keys for 2 seconds to turn off the left and right light circles.

★、For PC console

1、When the computer is in a shutdown or hibernation state, press the "- and HOME keys for about 2 seconds" channel light to search for Bluetooth signals in the form of running light. Turn on the Bluetooth function of the laptop, and connect to it. Bluetooth name: Xbox Wireless Controller

2、Wired connection To PC(Windows)

Connect the controller to the computer through the TYPE-C data cable. After a successful connection, handle channel 1 will flash slowly, and the steering wheel will default to Input mode; If the steering wheel cannot recognize the computer properly, please download the "xbox360_64Eng driver" from Baidu or Microsoft official website and install it on the computer.

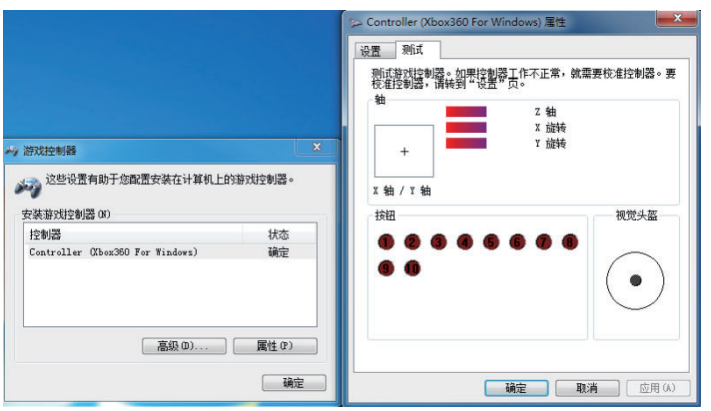

3、If you need to play a game in Dinput mode, please press and hold the HOME button for about 3 seconds to switch. After successful switching, channel light 2 will light up.

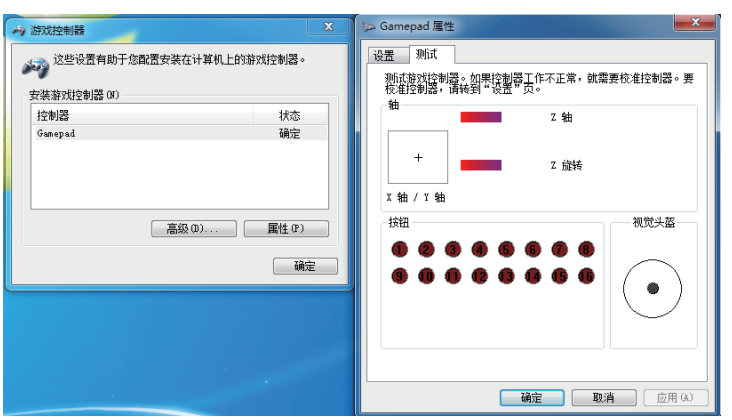

4. TURBO key settings

4.1. Keys with additional continuous shooting functions include cross keys A B X Y L1 L2 L3 R1 R2 R3

4.2. Turbo+function button: The first time this button enters continuous shooting, the second time it enters automatic continuous shooting, and the third time it releases continuous shooting; After setting the continuous shooting function, the light circle flashes with the frequency of continuous shooting; Note: When entering fully automatic continuous shooting, the handle will not enter sleep.

4.3. Continuous shooting speed 8 (initial)/15/25 times/second.

4.4. The continuous shooting speed can be adjusted up and down through the T+left joystick. Each time the continuous shooting speed is set, the corresponding color of the RGB light circle flashes according to the set speed frequency.

4.5. Clear all consecutive shots at once, press and hold the T key for about 5 seconds, and the corresponding color of the RGB light circle will flash 3 times before canceling all automatic continuous shooting and continuous shooting functions.

4.6. Press and hold the HOME key for 5 seconds to close the handle. After the handle is turned off, it retains the burst speed/burst and automatic burst.

4.7 Replace the connection platform and clear all automatic burst and burst functions, and restore the initial values.

5 . Backkey settings

5.1. The default left and right back keys are the ZL/ZR keys.

5.2. The back button can record content. Cross keys (up, down, left, right) A B X Y L1 L2 L3 R1 R2 R3

5.3. Press the T+left back button simultaneously for 3 seconds to enter the left back button recording; Simultaneously press

the T+right back button for 3 seconds to enter the recording of the right back button; The RGB light circle corresponding to the color of the light slowly flashes into recording; After recording the required buttons, if the recording is using the left back button, press the left back button to exit the motor vibration reminder.
5.4. When recording, if a single button is input, it is a single button mapping, and the mapping between single buttons supports the TURBO function.
5.5. If there is no operation within 60 seconds after entering programming, the automatic end programming back key function remains unchanged.
5.6 Close and restart the handle, still saving the content recorded by the current platform's back button.
5.7 At that time, press the -/+/T keys together for about 3 seconds to clear all settings.

6. Left and right rocker calibration

6.1. If the left and right joystick cannot reach the maximum value during product use, which is reflected in the game as the inability to automatically run or slow down movement speed, we can calibrate and repair the joystick.
6.2. When the "T" and "-" buttons are pressed simultaneously for about 3 seconds, the green light in the light circle flashes to enter the joystick calibration. The left and right joystick draw the maximum circle to obtain the maximum value and then press the - key to exit the calibration. The left and right joystick will obtain the maximum value and new center point position from the new one.

7. Gyroscope function

7.1. The gyroscope is in the default off state.
7.2. Turn on the real-time gyroscope, press and hold the Gyro key for about 2 seconds to turn on the gyroscope function. The LED in the light circle slowly flashes, and when the R3 key is pressed on the right joystick for the first time, the purple light circle slowly flashes. After setting, press the - key to exit and save.
7.3 Turn on the manual gyroscope, press and hold the Gyro key for about 2 seconds to turn on the gyroscope function. The LED in the light circle slowly flashes, and press the R3 key for the second time on the right joystick. The red light in the light circle slowly flashes. After setting, press the - key to exit and save. The red light remains on; When holding down L2, the gyroscope simulates the right joystick aiming.
7.4. Turn off the real-time gyroscope function and manual gyroscope function. Press and hold the Gyro key for about 2 seconds to turn on the gyroscope function. The LED in the light circle slowly flashes, and the right joystick is pressed with the R3 key for the third time to turn off the real-time gyroscope function and manual gyroscope function.
7.5. Start the gyroscope to control the left joystick. Press and hold the Gyro key for about 2 seconds to turn on the gyroscope function. The LED in the light circle slowly flashes. After the left joystick is set by pressing the L3 key, press the - key to exit and save, and the green light circle remains on.
7.6. Turn off the gyroscope, press and hold the gyroscope switch button for about 3 seconds, and the light circle will flash quickly for 3 seconds to turn off the gyroscope.

8. Vibration settings

8.1. The vibration intensity is 0/30%/70%/100%, with a default

of 70%
8.2. The vibration amplitude can be adjusted up and down through the T+right joystick; Increase the vibration intensity on the T+right joystick, and decrease the vibration intensity below the T+right joystick.
9. Turn off or on the light bar, and simultaneously press the - and+keys for 2 seconds to turn off the left and right light bars.
10. Change the light bar's color, while pressing the - and+keys to change the light bar's color.
11. Turn off or on the light circle, and simultaneously press the - and L3 keys for 2 seconds to turn off the left and right light circles.

★ Low battery/charging/hibernation/factory settings

1. When the battery is low, the channel indicator light of the handle controller flashes to remind charging.
2. When charging online, the channel light slowly flashes, and the corresponding platform light remains on after fully charging.
3. When no operating handle enters sleep mode within 10 minutes.
4. When pressing the "-/+/T" keys simultaneously for 3 seconds, restore the initial value of the handle.

★ Electrical parameters

1. Working voltage 3.3-5V
2. System frequency 26MHz
3. The maximum current is around 180MA (depending on the definition of the vibration intensity of the game output motor)
4. Battery BL-5C 3.7V

4. Battery BL-5C 3.7V
5. Sleep current less than 5uA
8. TYPE-C cable length is approximately 0.8-1 meter
6. Bluetooth version 5.3
7. Bluetooth reception distance is about 8 meters
8. Input 5V500A

★Controller charging contact

When purchasing the controller, a charging base can be selected, and the handle can be charged by placing the charging base on it.

★About KeyLinkerAPP Keychange Instructions

1. The controller can be connected to both KeyLinker and gaming devices, and can be used simultaneously. KeyLinker can modify and set the parameters of multiple functions such as buttons, joystick, trigger, motor, etc. of the controller. Users can

freely and flexibly adjust the functional parameters of the controller according to their preferences and habits. The appropriate parameter settings and excellent features of KeyLinker, such as combos and macros, will bring you a more perfect experience when using the controller.

2. KeyLinker download location

You can search for "KeyLinker" downloads on platforms such as App Store, Google Play, Huawei App Market, Xiaomi App Store, OPPO App Store, Tencent App Store, 360 App Market, and Dandelion.

3. After downloading and installing KeyLinker, open the KeyLinker app. Press the "-" and "HOME" buttons simultaneously while the handle is not awake for about 3 seconds, and the channel light will flash to search for Bluetooth signals. Click on "DOYO controller change key"

Click on the gear

The following pages respectively have modification keys/joystick/trigger/motor/combo/macro ML, MR/others. Modify according to the required items, and click Apply after making the changes.

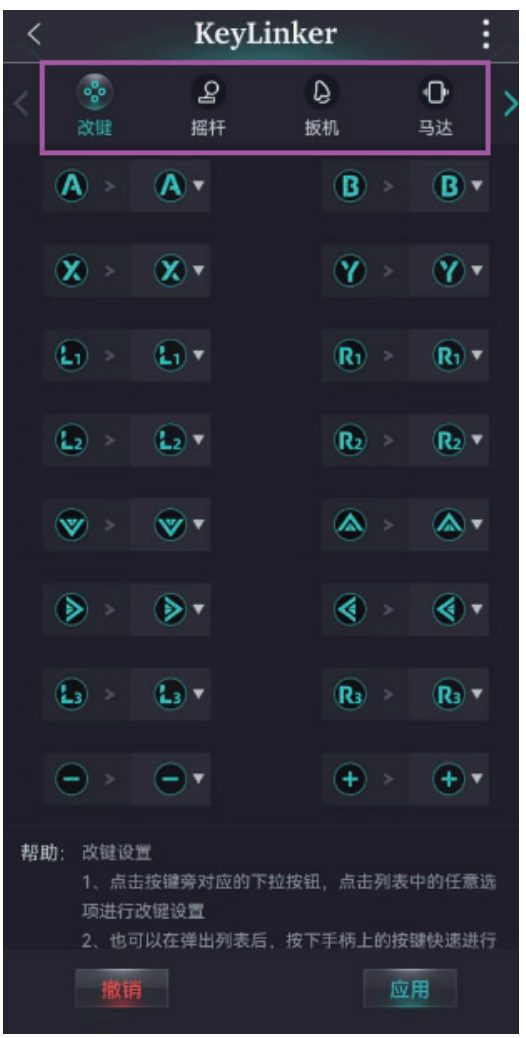

If you need to restore the initial values after modifying the buttons and functions, please click 'Restore Factory'.

Please refer to the "Beginner Tutorial" for the first time using the app's key changing function

3. Tick '√' in the pairing reminder box

4、Click on the gear to enter direct mode.

5、If it is the first time to use it, you can learn according to the beginner's tutorial and then download the game shown in the figure below.

MADE IN CHINA

FCC Warnning:

This equipment has been tested and found to comply with the limits for a Class B digital device, pursuant to part 15 of the FCC Rules. These limits are designed to provide reasonable protection againstharmful interference in a residential installation. This equipment generates, uses and can radiateradio frequency energy and, if not installed and used in accordance with the instructions, maycause harmful interference to radio communications. However, there is no guarantee thatinterference will not occur in a particular installation. If this equipment does cause harmfulinterference to radio or television reception, which can be determined by turning the equipmentoff and on, the user is encouraged to try to correct the interference by one or more of thefollowing measures:

- Reorient or relocate the receiving antenna.
- Increase the separation between the equipment and receiver.
- Connect the equipment into an outlet on a circuit different from that to which the receiver is connected.
- Consult the dealer or an experienced radio/TV technician for help.

Caution: Any changes or modifications to this device not explicitly approved by manufacturer could void your authority to operate this equipment.

This device complies with part 15 of the FCC Rules. Operation is subject to the following two conditions:

(1)This device may not cause harmful interference, and (2) this device must accept any interference received, including interference that may cause undesired operation.

This equipment complies with FCC radiation exposure limits set forth for an uncontrolled environment. This equipment should be installed and operated with minimum distance 0cm between the radiator and your body.