INSTALLATION GUIDE

Witbox +

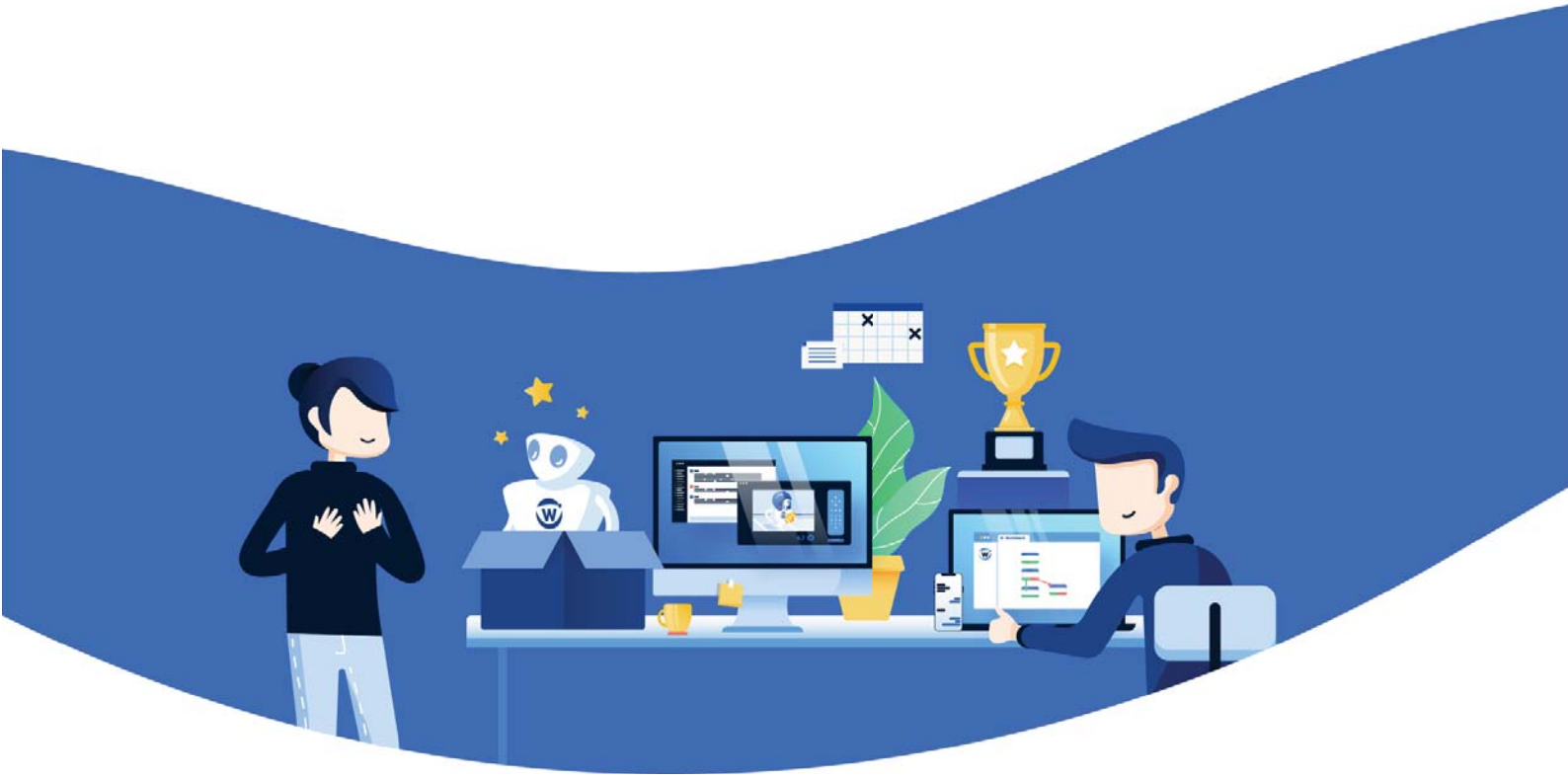

www.witbe.net

Version History

Date	Version	Person	Comment(s)
01/03/23	V1	-	-

TABLE OF CONTENTS

I. INTRODUCTION 2

1. Packing content 2

1. Prerequisites 3

II. RACK INSTALLATION 3

A. Witbox+ rack installation 3

1. Single Witbox+ configuration 4
2. Dual Witbox+ configuration 5

B. Power Controller rack installation 6

1. Single Power controller configuration 6
2. Dual Power Controller configuration 8

III. HARDWARE SETUP 9

A. STBs Configuration 9

1. Connect the Witbox to power and network 9
2. Connect your STB to the Witbox+ 11
3. Add STB power control 14

B. Mobiles Configuration 17

1. Connect the Witbox+ to power and network 17
2. Connect your Mobile to the Witbox+ 18

C. Access your device and validate the setup 21

IV. THE WITBOX SCREEN 22

V. WITBOX+ FIRST BOOT & TROUBLESHOOTING 22

A. Witbox expected first boot behavior 22

B. Troubleshooting 23

1. IP issue 23
2. Hub Connection issue 24
3. STB Control issue 25

I. INTRODUCTION

This documentation presents the step to perform in order to install the Witbox+ and its STB or mobile devices. See more of the technical requirement of the Witbox+ on the dedicated page Robot Hardware Technical requirements.

1. PACKING CONTENT

The Witbox box contains:

- 1x Witbox+
- 1x red ethernet cable for Witbox+ network access
- 1x power cord for the Witbox+ power adapter
- 2 x long brackets
- 1 x short bracket (dual Witbox+)

If you want to connect STB(s), the accessories box also includes:

- 1 x HDMI cable by STB
- 1x IR blaster by STB
- 1x IR blaster sticker by STB

The accessories box also includes, for Power Controller:

- 1 x Power controller (4 ports)
- 1 x blue ethernet cable
- 1 x power cord for the power controller
- 4 x IEC 320 multi

- 2 x long brackets
- 1 x junction bracket (dual power controller)

If you want to connect mobile(s), the accessories box also includes:

- 1 x USB Controller (4 ports)
- 1 x USB-C Cables by mobile device
- 1x white ethernet cable for Witbox+ connection to USB Controller

1. PREREQUISITES

- Have the devices ready
    - Have the STBs ready, connected, and provisioned on the customer backend,
    - Have the mobile devices ready, configure your iOS, configure your Android, and install your application on the mobile devices.
- The Witbox+ will be configured in DHCP on its "Network" port, it only requires valid Internet access to reach its Hub Cloud (the Witbox connection only requires an outbound HTTPS connection — a standard & simple Internet access)

II. RACK INSTALLATION

A. WITBOX+ RACK INSTALLATION

If you have a single Witbox+ proceed to rack installation section 2.1.1.

If you have a dual Witbox+ proceed to rack installation section 2.1.2.

1. SINGLE WITBOX+ CONFIGURATION

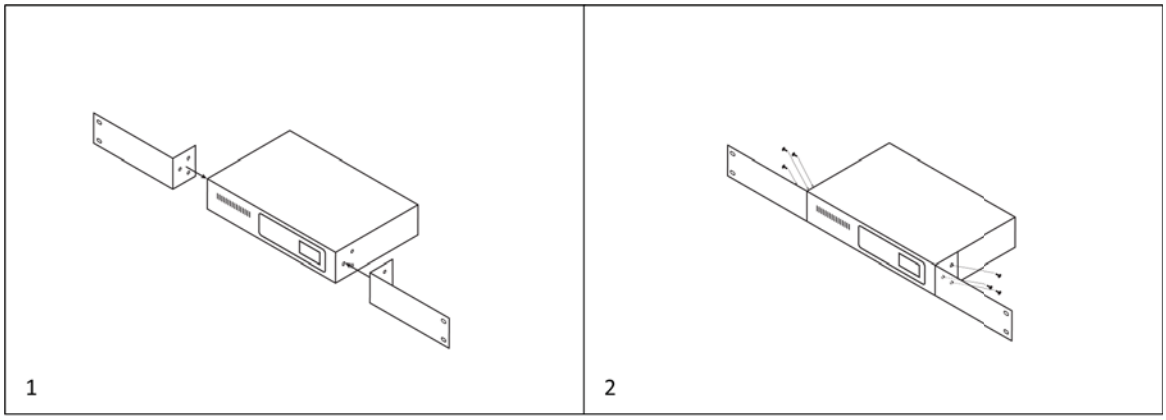

1. Place the brackets next to the Witbox+.
2. Use the screws (WP1) to fix the brackets.

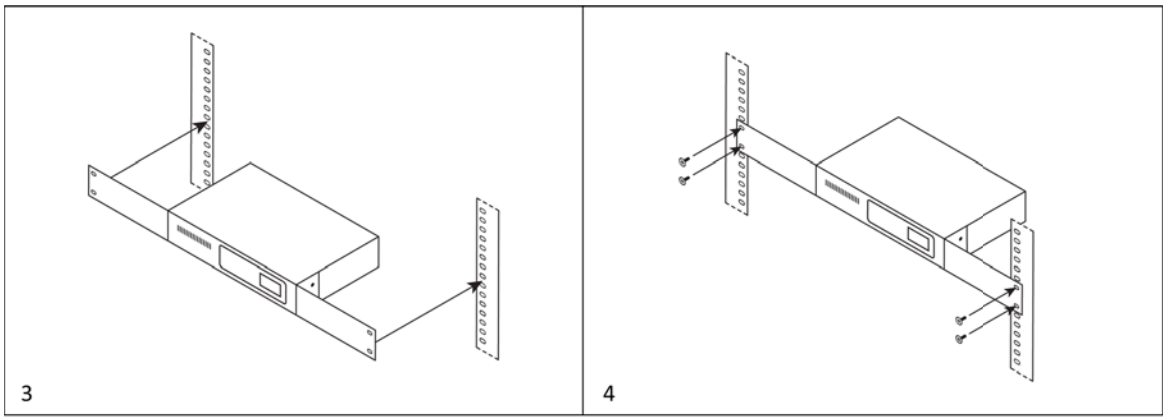

3. Place the Witbox+ at the right location on the rack.
4. Use the screws to fix it.

Your Witbox+ is ready to be connected to the devices.

2. DUAL WITBOX+ CONFIGURATION

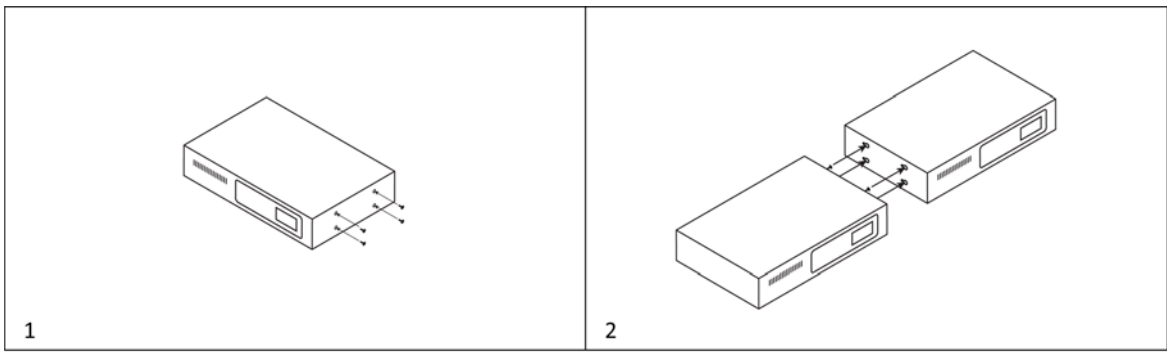

1. Take one of the Witbox+ and place the screws (WP2) on its right side facing front.
2. Assemble it to the other Witbox+.

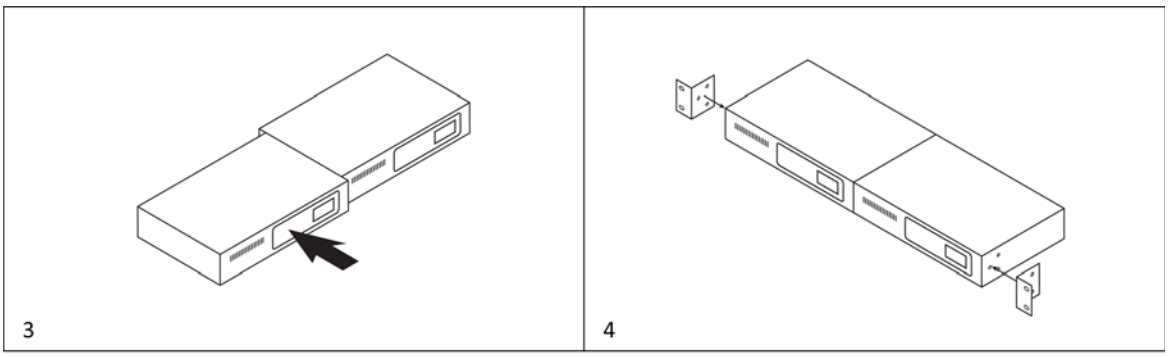

3. Adjust the Witboxes to make sure they are properly aligned.
4. Place the brackets on the side of the assembly.

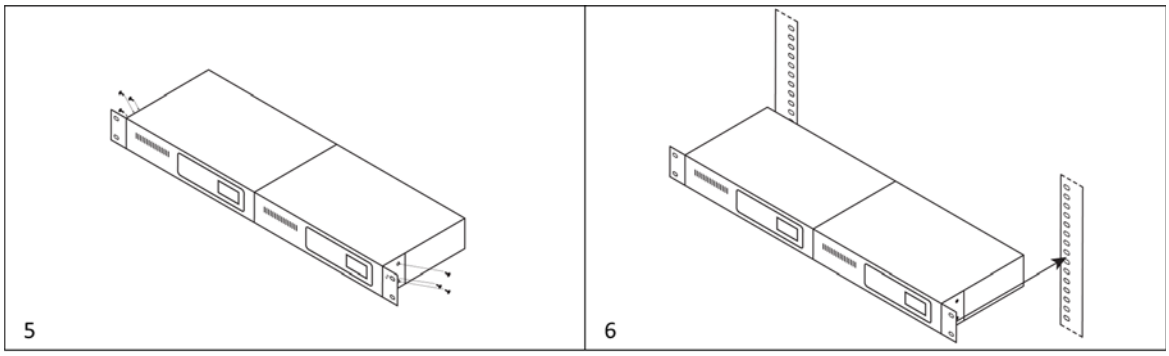

5. With the right screws (WP1), fix the brackets.
6. Place the assembly at the right location on the rack.

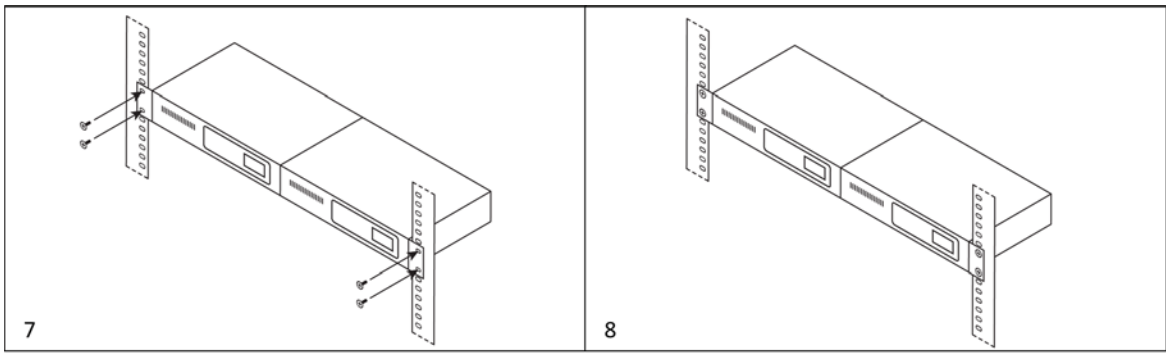

7. Fix it with the screws.
8. Your dual of Witbox+ is ready to be connected to the devices.

B. POWER CONTROLLER RACK INSTALLATION

If you have a single Witbox+ proceed to power controller rack installation section 2.2.1.

If you have a dual Witbox+ proceed to power controller rack installation section 2.2.2.

1. SINGLE POWER CONTROLLER CONFIGURATION

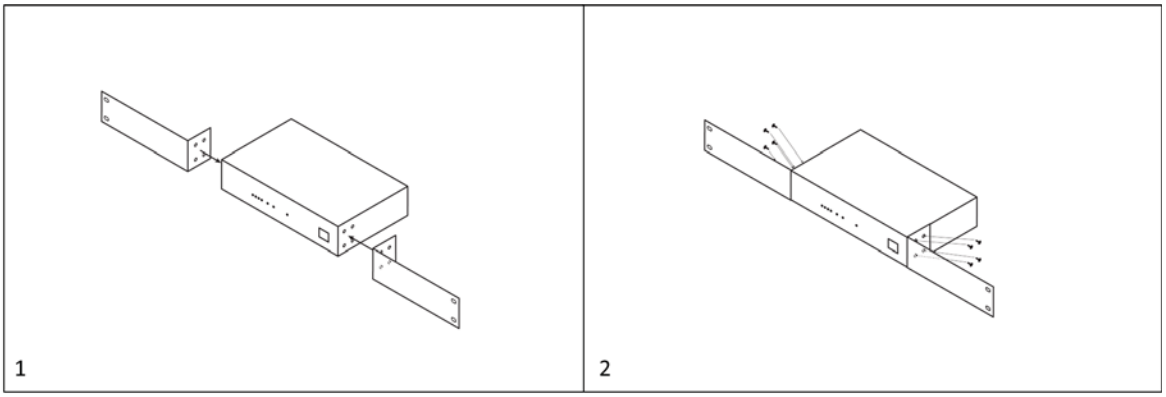

1. Place the brackets next to the power controller.
2. Fix them with the screws (IP1).

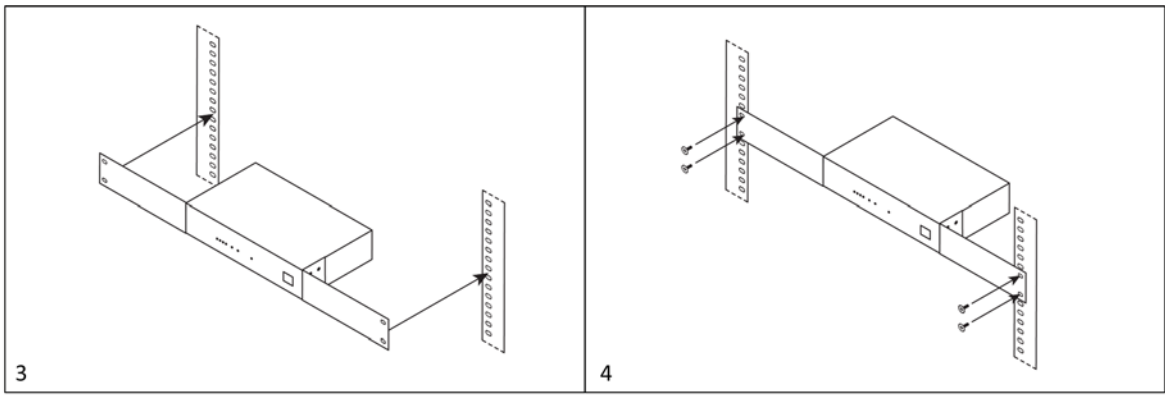

3. Place the Power Controller at the right position on the rack.
4. Fix it with the screws.

Your Power Controller is ready to be connected to the Witbox+ and the devices.

2. DUAL POWER CONTROLLER CONFIGURATION

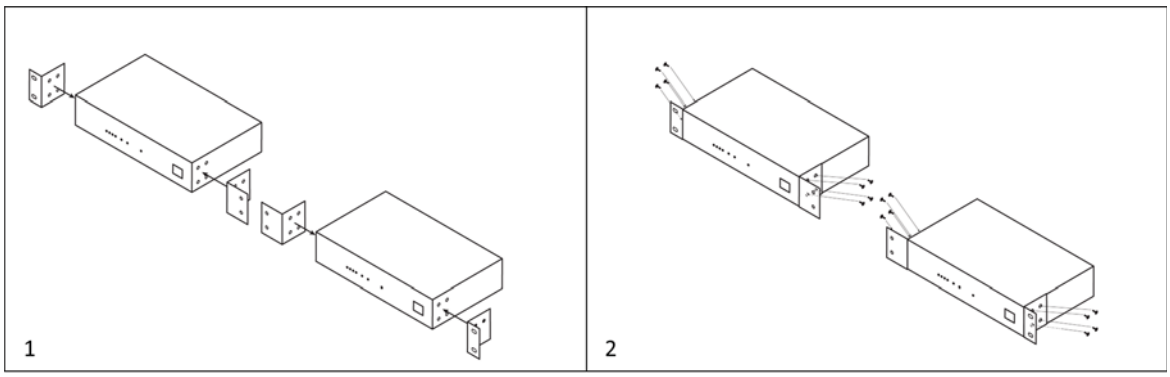

1. Place the brackets on the side of each Power Controller.
2. Fix them with the screws (IP1).

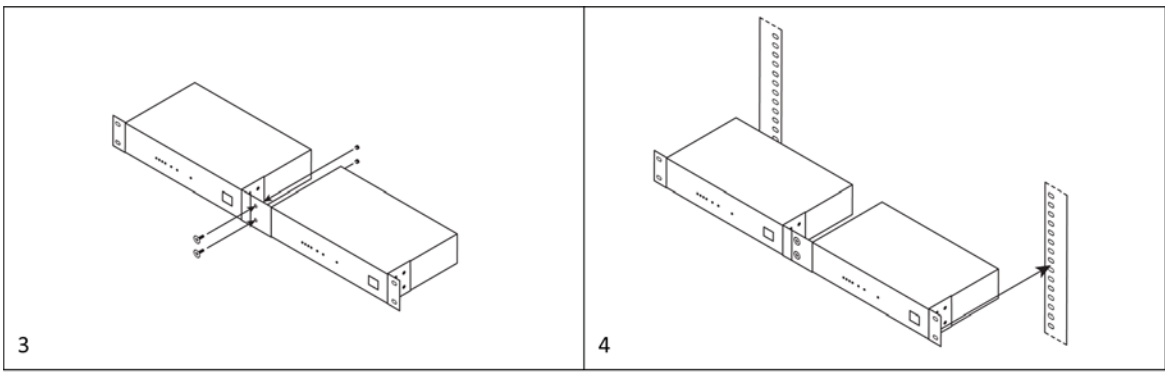

3. Use the junction bracket to fix both power controllers together, and fix it with the screw (IP2).
4. Place assembly at the right location on the rack.

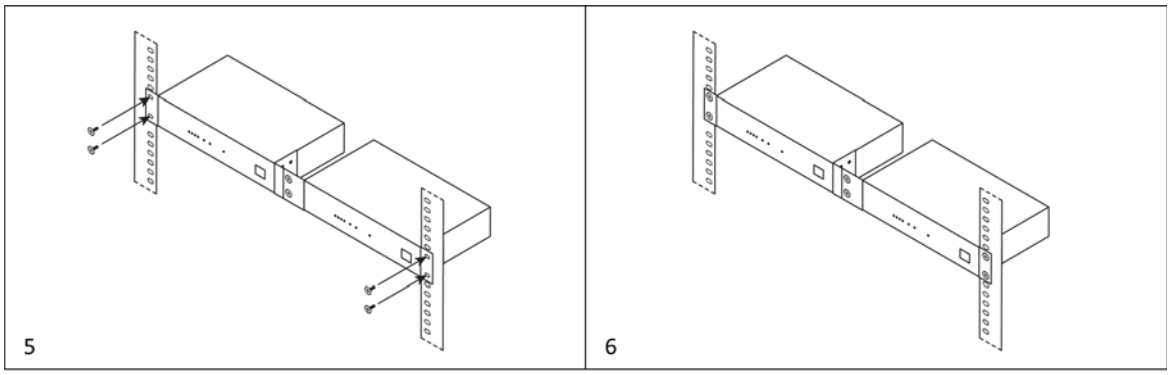

5. With the right screws fix the brackets.
6. Your Power controllers are ready to be connected to the witbox+ and the devices.

III. HARDWARE SETUP

A. STBS CONFIGURATION

1. CONNECT THE WITBOX TO POWER AND NETWORK

Perform the following cabling:

1. Connect the Witbox power supply to a power source. As soon as you plug it in, the Witbox automatically powers itself on.

2. Use the red cable, to connect the Witbox "Network" Ethernet port to your network switch.

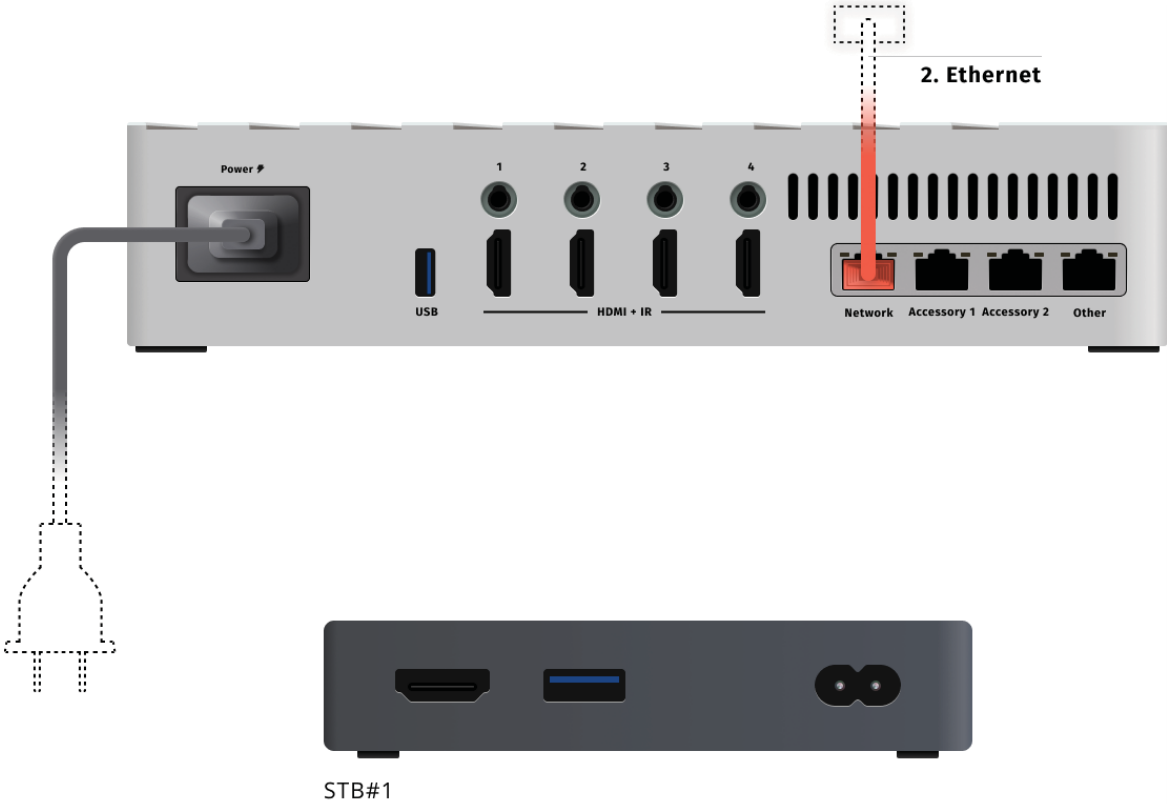

2. CONNECT YOUR STB TO THE WITBOX+

Connect the HDMI output from your STB to the according HDMI port of the Witbox to allow the Witbox to access the video stream of your device.

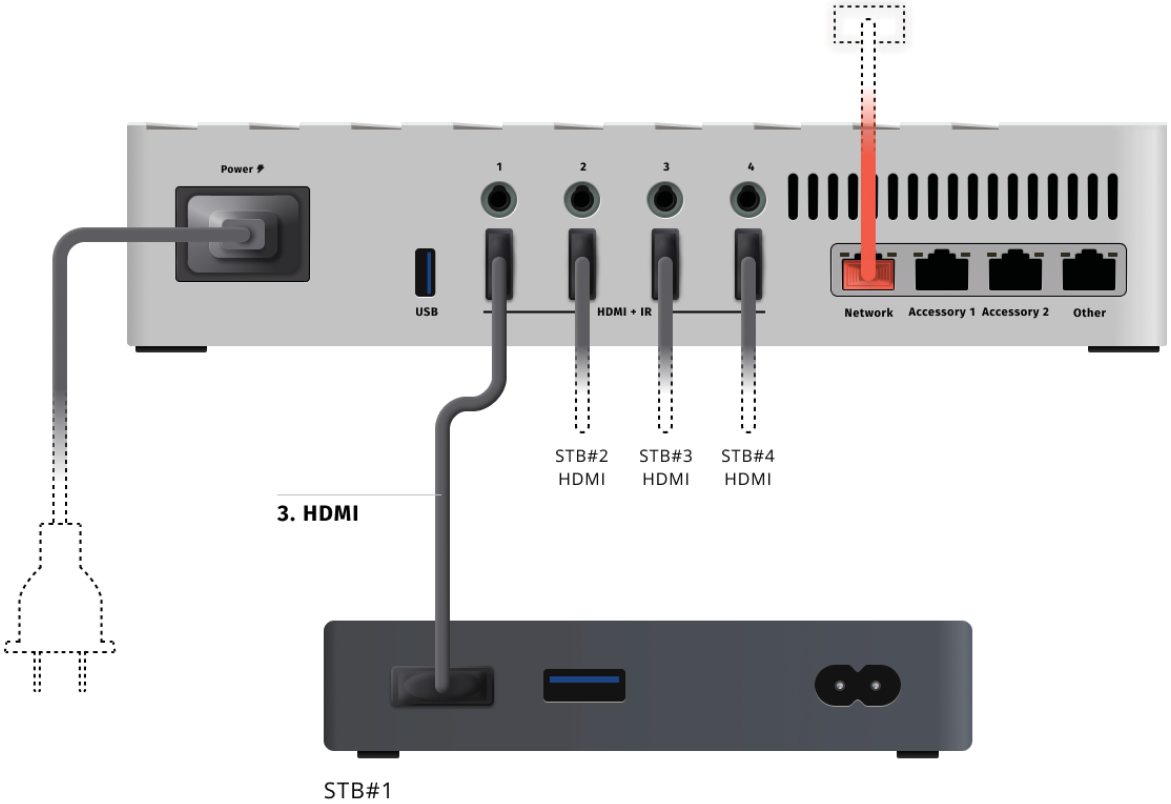

a) STB WITH IR REMOTE CONTROLS

Plug the IR blaster from the "IR" port of the Witbox to the front of the STB (where the IR LED is located). It is recommended to secure the blaster to the STB thanks to the supplied IR blaster sticker. This also reduces possible IR leaks.

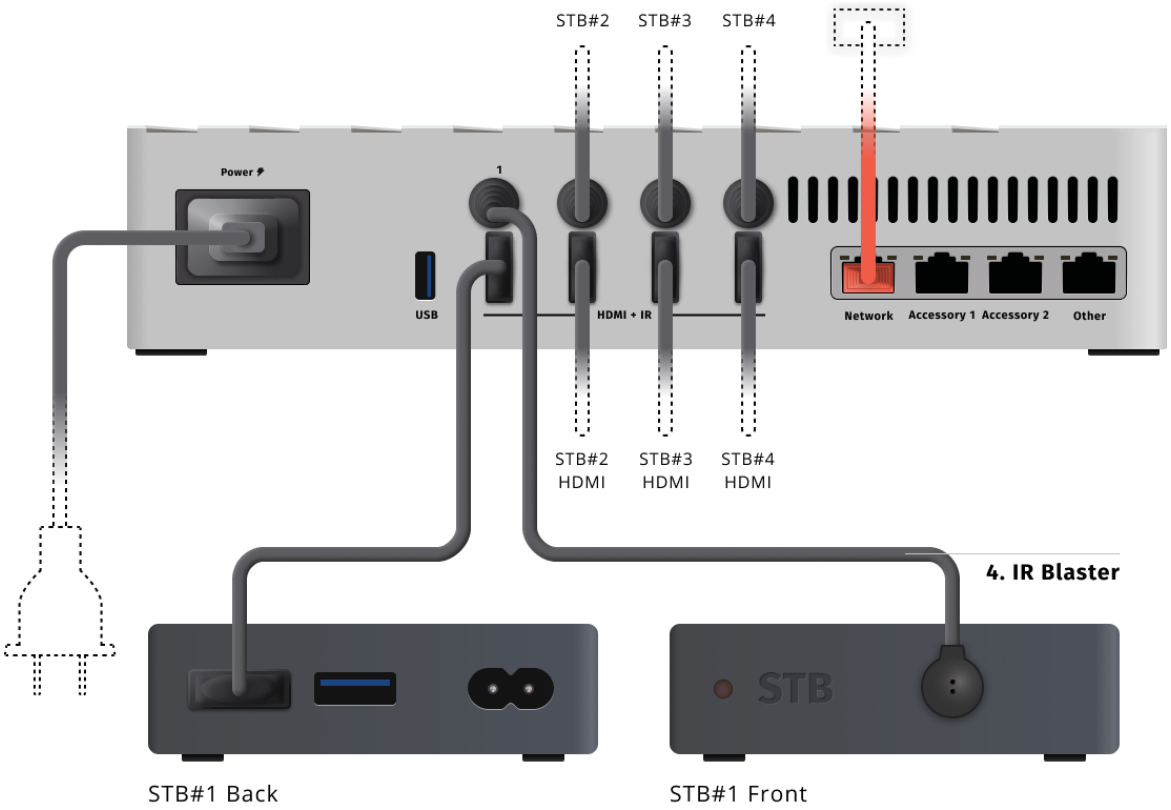

b) STB WITH BLUETOOTH REMOTE CONTROLS

No physical connection is needed, the Witbox will be paired to the STB using Workbench.

3. ADD STB POWER CONTROL

1. Use the power cord to connect the Power Controller to a power source.

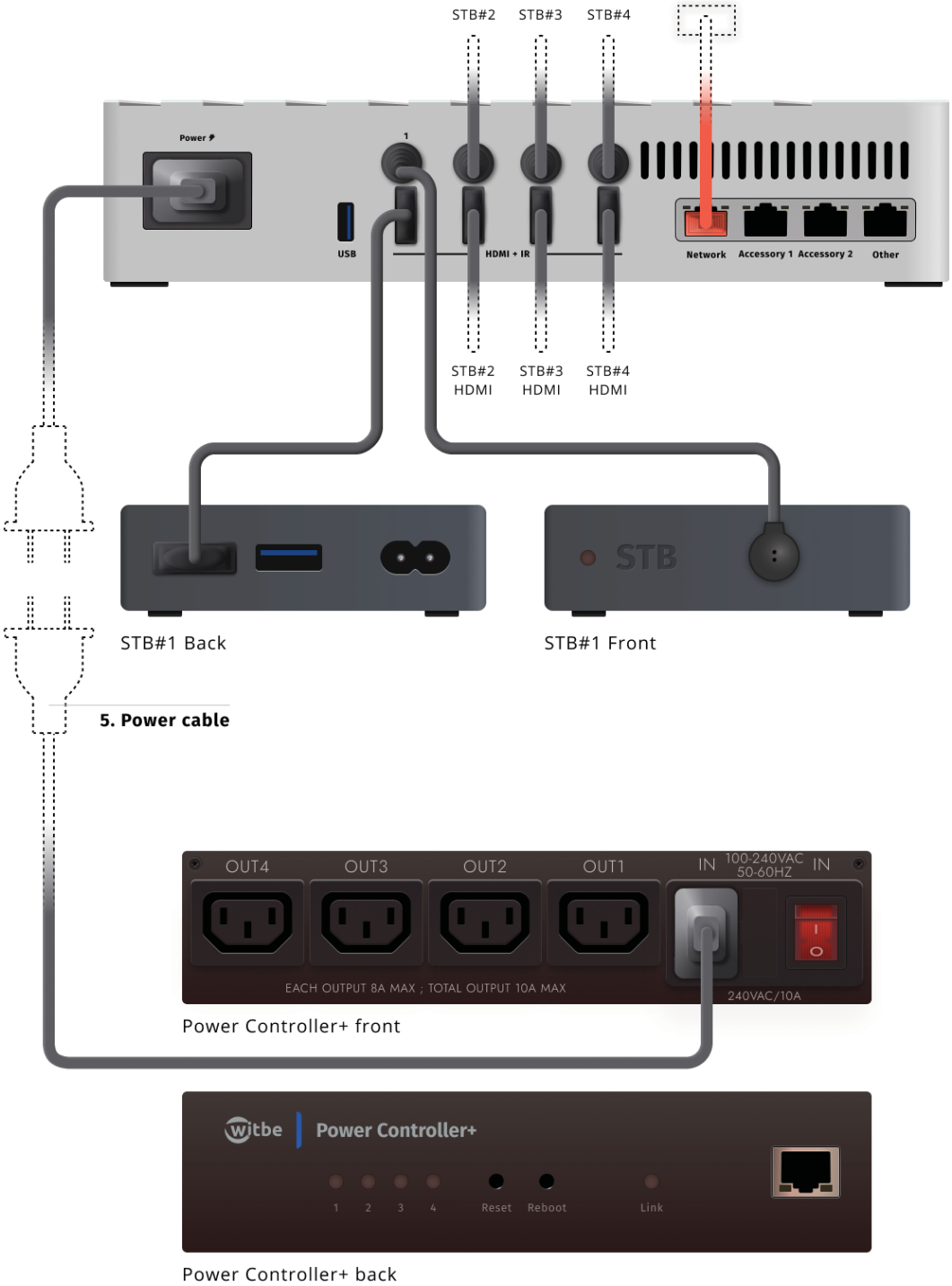

1. Use the blue Ethernet cable to connect the Witbox «Accessory» Ethernet port to the Power Controller.

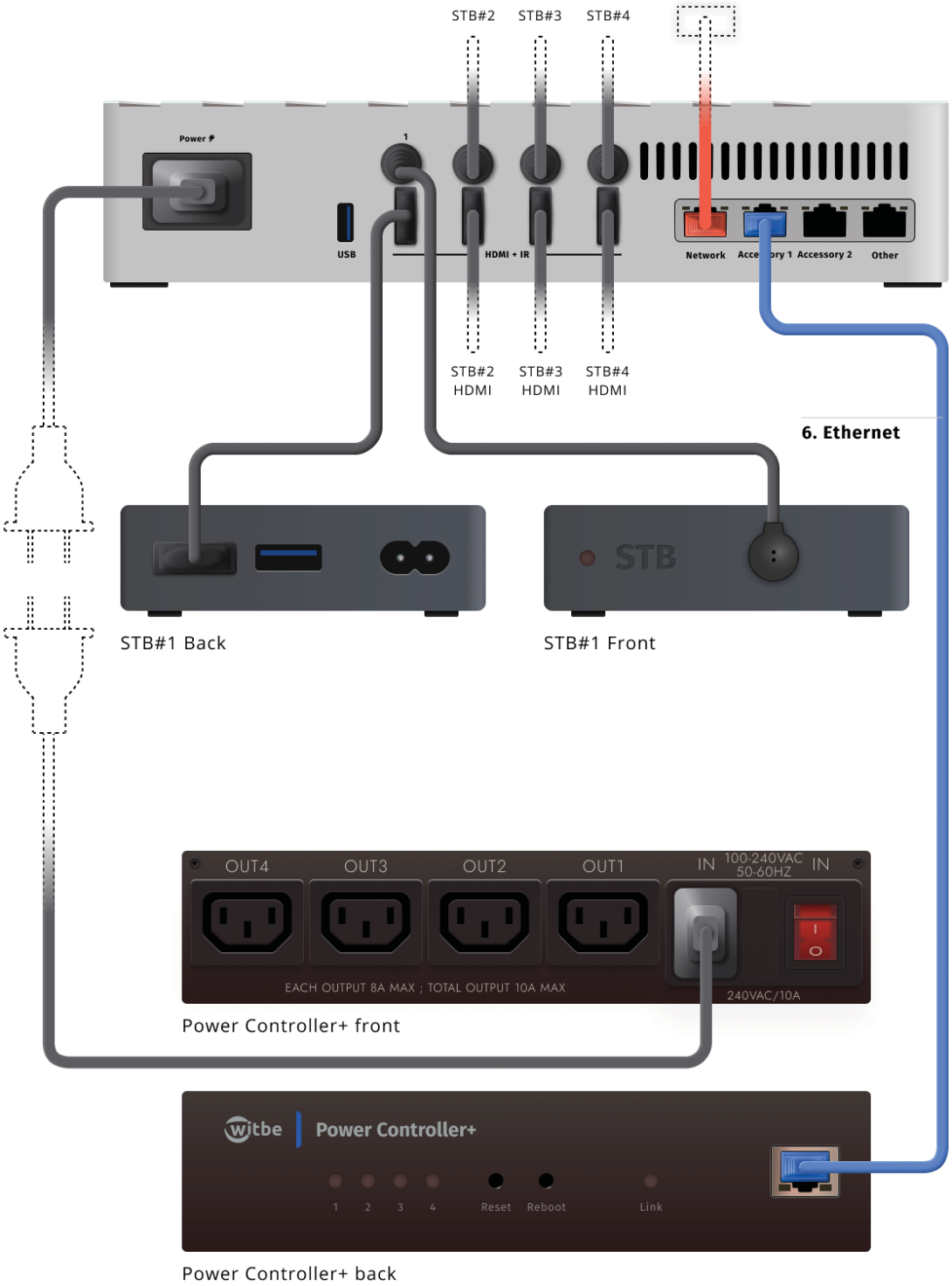

1. Plug the power cable of the STB into the Power Controller.

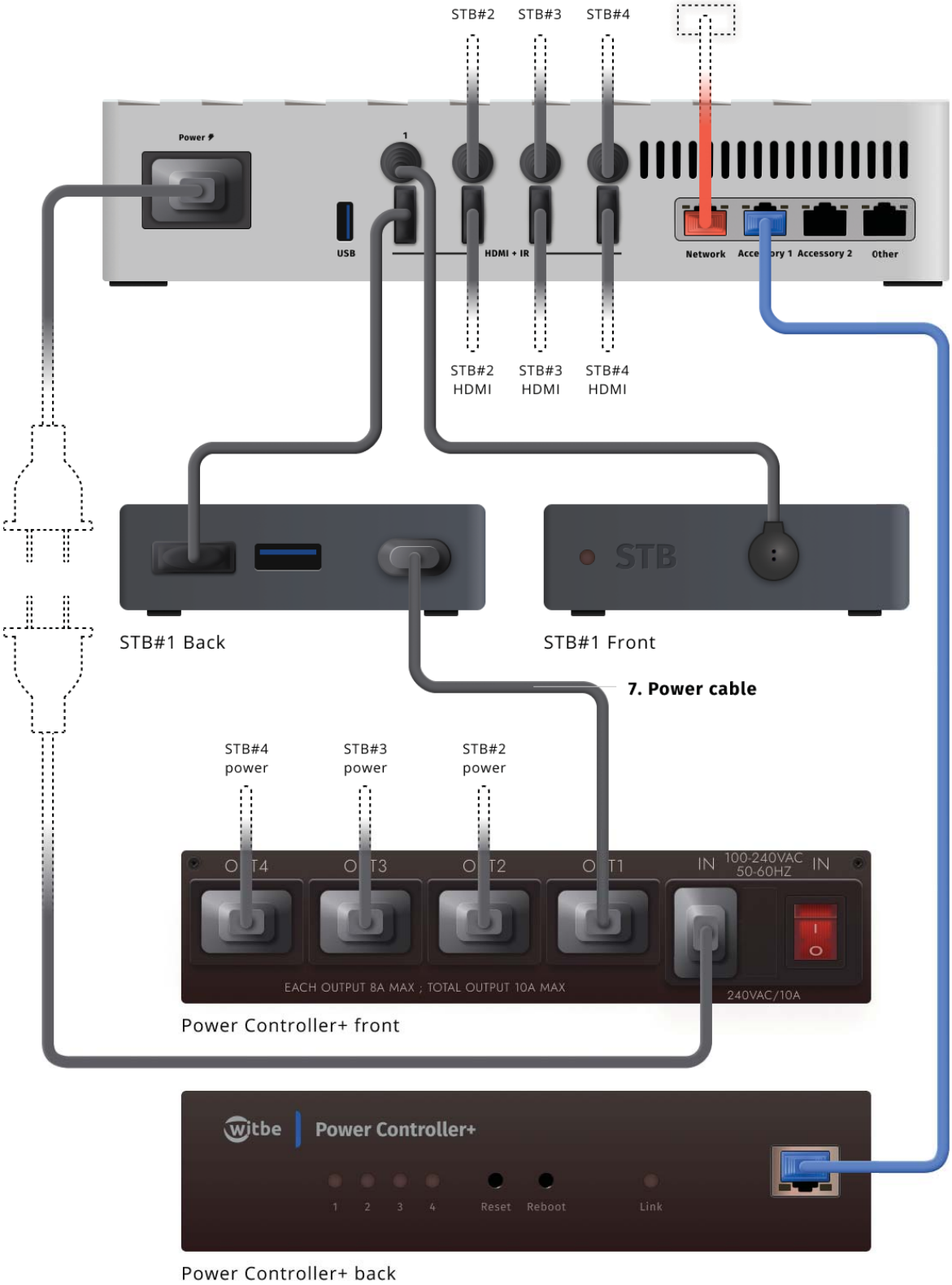
STB#2
STB#3
STB#4
Power
USB
HDMI + IR
Network
Accessory 1
Accessory 2
Other
STB#2 HDMI
STB#3 HDMI
STB#4 HDMI
STB
STB#1 Back
STB#1 Front
7. Power cable
STB#4 power
STB#3 power
STB#2 power
OUT4
OUT3
OUT2
OUT1
IN 100-240VAC 50-60HZ IN
EACH OUTPUT 8A MAX ; TOTAL OUTPUT 10A MAX
240VAC/10A
Power Controller+ front
witbe
Power Controller+
1 2 3 4
Reset
Reboot
Link
Power Controller+ back

B. MOBILES CONFIGURATION

1. CONNECT THE WITBOX+ TO POWER AND NETWORK

Perform the following cabling:

1. Connect the Witbox+ power supply to a power source. As soon as you plug it in, the Witbox automatically powers itselfon.

2. Use the red cable, to connect the Witbox "Network" Ethernet port to your network switch.

2. CONNECT YOUR MOBILE TO THE WITBOX+

1. Connect the USB-C cable from your Mobile to the proper USB port on the USB Controller.

2. Use the white cable to connect the USB Controller to the Witbox+ to allow the Witbox+ to access the video stream and control your mobile device.

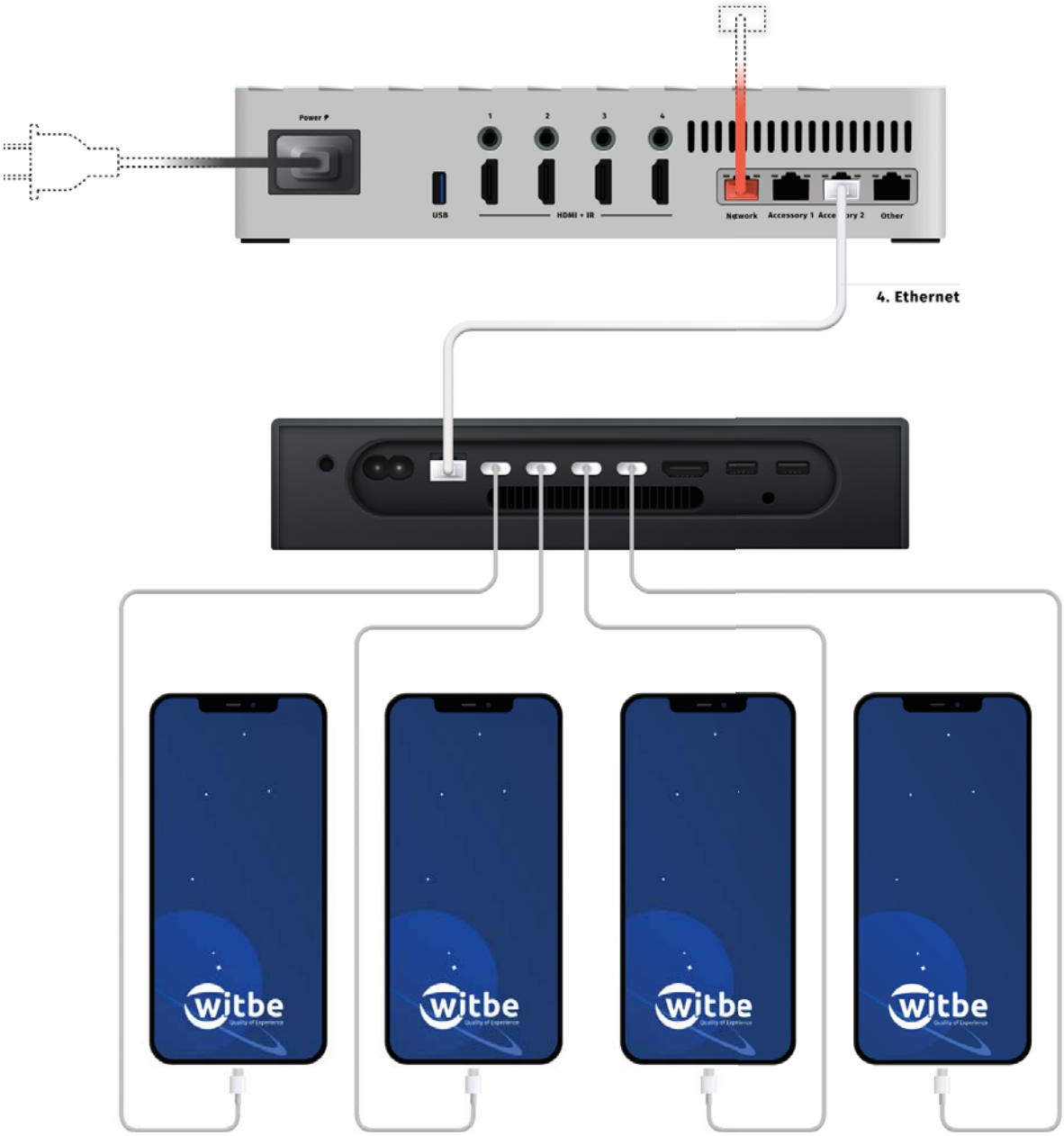

2. Connect the USB Controller power supply to a power source.

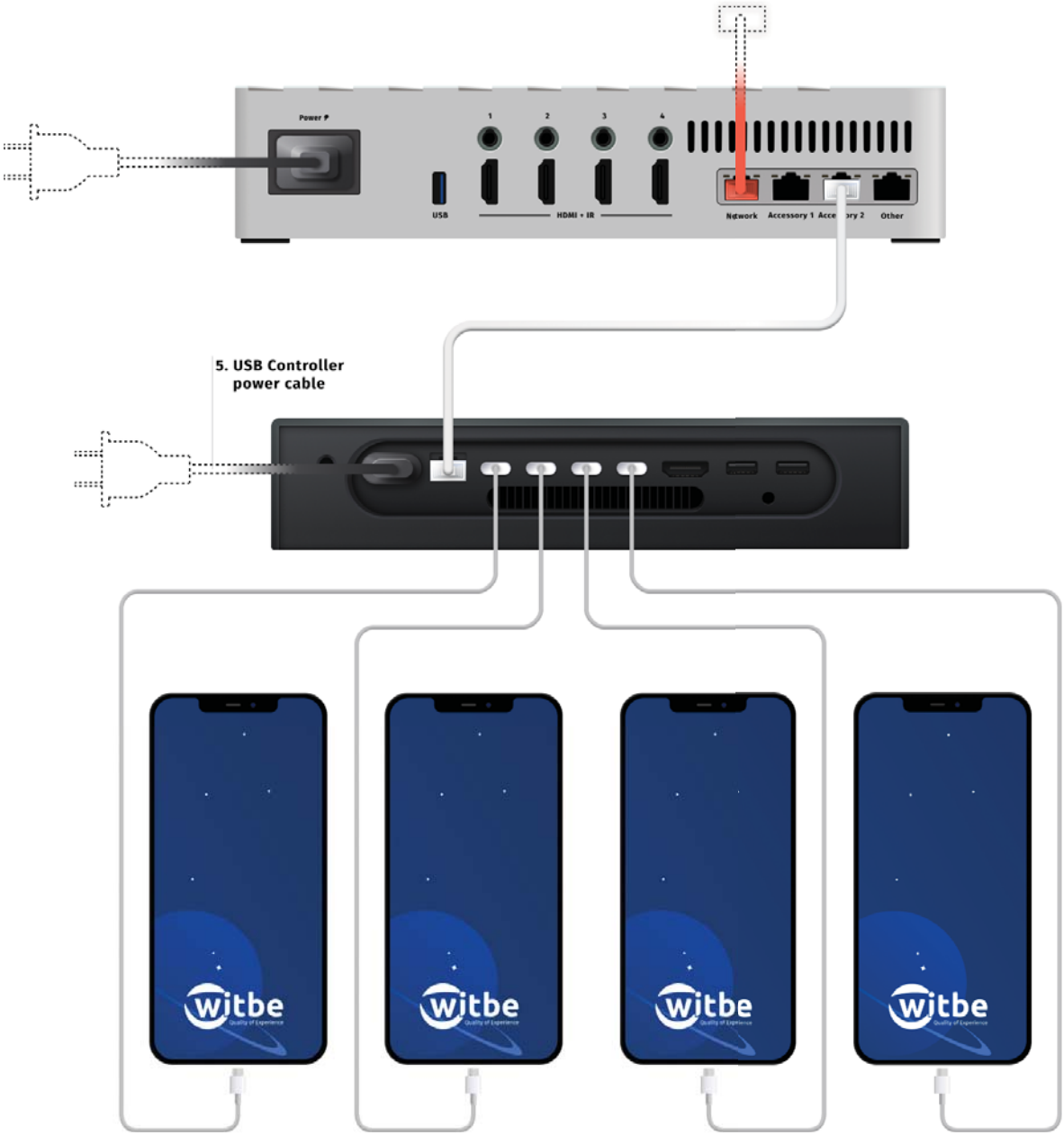

C. ACCESS YOUR DEVICE AND VALIDATE THE SETUP

Thanks to the REC web you can now directly access your device stream from any browser and validate the device.

IV. THE WITBOX SCREEN

Once plugged into a power source, the Witbox automatically powers itself on. After up to 30s, the Witbox screen will turn on, displaying:

- Date and time
- Witbox name: may be used to find the Witbox or the STB in Workbench.
- Hub connection status: the Witbox automatically registers to the Hub (all it requires is simple Internet access — outbound HTTPS connection for network geeks). If the Hub connection is not OK, please check your Internet access.
- IP: Local IP that the Witbox automatically fetches with DHCP. If no IP is displayed, please check your network connectivity and DHCP availability.

V. WITBOX+ FIRST BOOT & TROUBLESHOOTING

This section details the expected behavior of the Witbox+ during first boot and what to do if it behaves differently.

A. WITBOX EXPECTED FIRST BOOT BEHAVIOR

The Witbox+ should take around 2min to boot. This screen will be displayed during the boot process:

This screen will be displayed when the Witbox has booted and is properly connected to the Hub:

If upgrade packages are available, the Witbox+ will automatically download and install them during first boot. The following screens can be displayed for a maximum of 15 minutes in total.

As written on the screen, NEVER unplug the Witbox during the whole upgrade process.

After the upgrade process, the Witbox+ will reboot and should return to the Hub: OK status.

B. TROUBLESHOOTING

If the Witbox+ does not boot and connect to the Hub, it may display the following errors.

If you encounter any of these screens, please contact the Witbe team for assistance.

1. IP ISSUE

- Hub ~OK

The Witbox+ is connected to the Hub but there is an error in the IP configuration

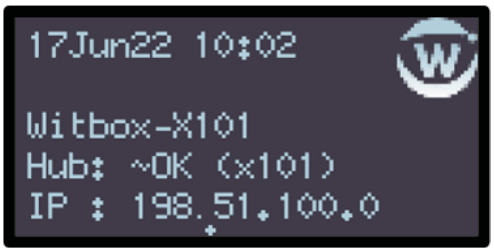

Make sure the network is configured in DHCP, for that:

- Check the network cable,
- Check the network is configured in DHCP, for example, plug your laptop on the same switch port and check it obtains an IP from the same LAN.

2. HUB CONNECTION ISSUE

- Hub KO

The Witbox+ has no connection to the Hub.

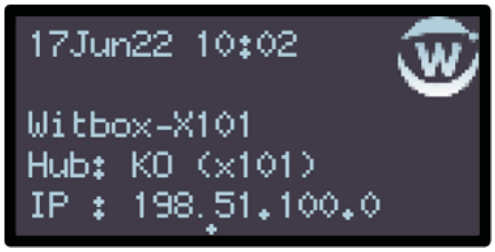

- BCK OK

The Witbox+ has no connection to the Hub and is connected to Witbe Backup over the internet.

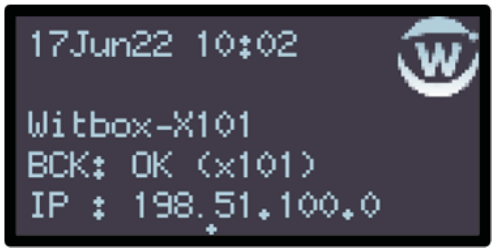

- Unset

The Hub configuration of the Witbox+ is incorrect.

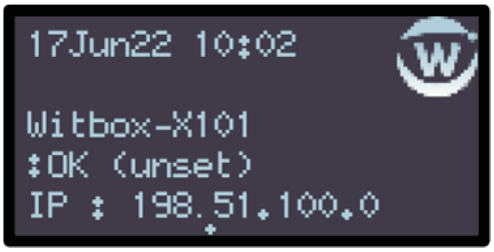

Check internet access, for that:

- Plug laptop on in ethernet on the ethernet port,
- Disable wifi,
- Check have internet access, you can try to access https://witbe.app.

3. STB CONTROL ISSUE

Make sure the STB is up and running and properly configured, for that:

- Check the IR blaster is properly placed on the box,
- Eventually restart the STB.

FCC warning:

This device has been tested and found to comply with the limits for a Class B digital device, pursuant to Part 15 of the FCC Rules.

These limits are designed to provide reasonable protection against harmful interference in a residential installation. This device generates, uses and can radiate radio frequency energy and, if not installed and used in accordance with the instructions, may cause harmful interference to radio communications. However, there is no guarantee that interference will not occur in a particular installation. If this device does cause harmful interference to radio or television reception, which can be determined by turning the device off and on, the user is encouraged to try to correct the interference by one or more of the following measures:

- Reorient or relocate the receiving antenna.
- Increase the separation between the device and receiver.
- Connect the device into an outlet on a circuit different from that to which the receiver is connected.
- Consult the dealer or an experienced radio/TV technician for help

Changes or modifications not expressly approved by the party responsible for compliance could void the user's authority to operate the equipment.

The distance between user and products should be no less than 20cm

witbe
Quality of Experience

Paris
+33 (0) 1 47 67 77 77

Long Island
+1 (929) 309-3523

New York
+1 (212) 229-2160

Denver
+1 (720) 512-5929

San Francisco Bay
+1 (408) 816-8244

Montreal
+1 (514) 395-1777
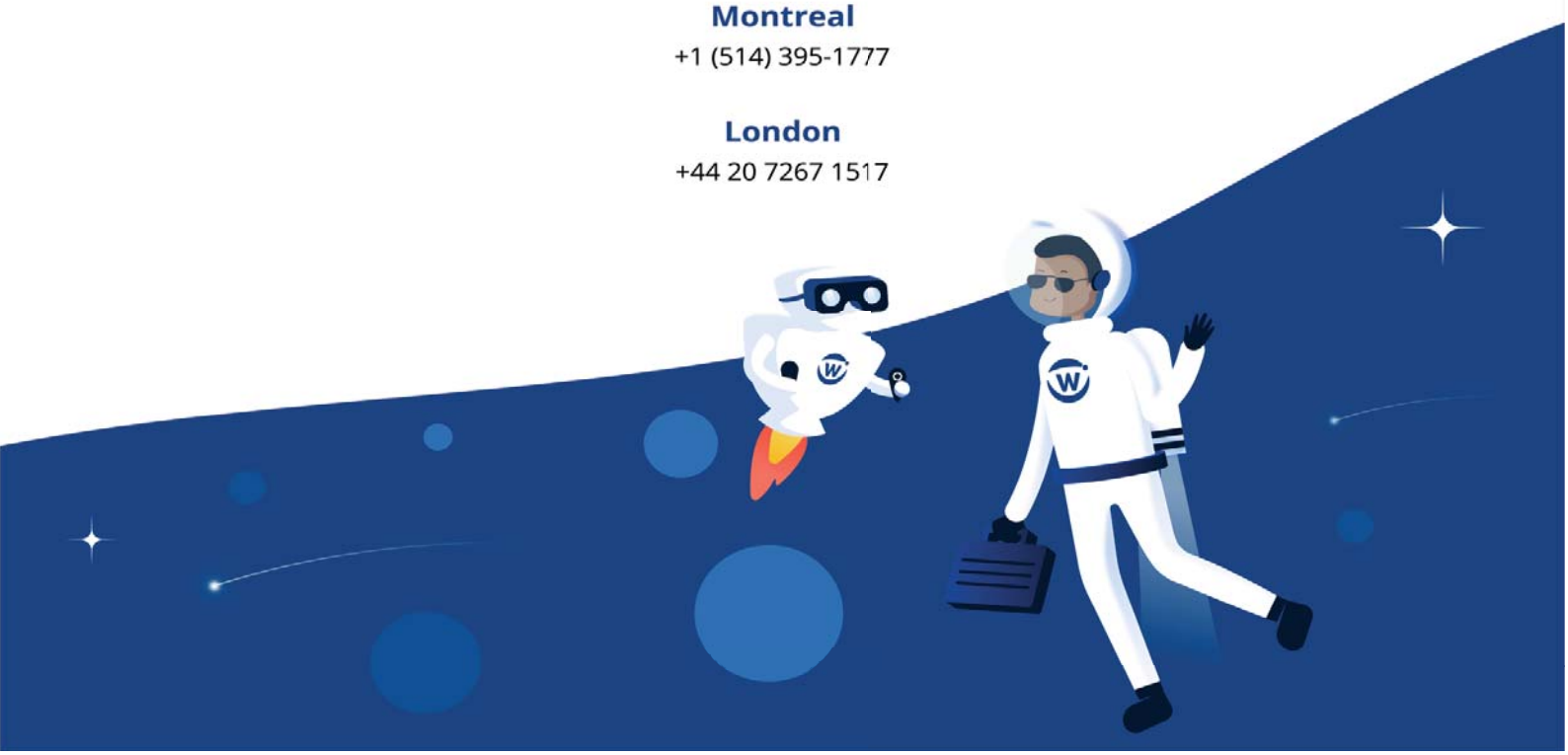
London
+44 20 7267 1517