Part No. P822601 / P822602

Universal Broadband FR4 Embedded LTE / LPWA Antenna

698 – 960 MHz / 1710 – 2200 MHz / 2300 – 2400 MHz / 2500 – 2700 MHz / 3300– 3800 MHz

Supports: Broadband LTE (OCTA-BAND), LTE CAT-M, NB-IoT, SigFox, LoRa, Cellular LPWA, RPMA, CBRS

*Mirrored version offered as P822602

Broadband FR4 Embedded LTE/LPWA Antenna
698 - 960 MHz
1700 - 2700 MHz
3300 - 3800 MHz

KEY BENEFITS

Reduced Costs and Time-to-Market
Standard antenna eliminates design fees and cycle time associated with a custom solution; getting products to market faster.

Greater Flexibility with Unique Form Factors
KYOCERA AVX's technology helps you deliver more advanced ergonomic designs without adverse impact on product performance.

Reliability
Comply with latest RoHS requirements

APPLICATIONS

- Medical applications
- Home automation
- Smart metering
- M2M, Industrial devices
- IoT
- Firstnet
- Healthcare
- Point of Sale
- Tracking
- NB-IoT
- Sigfox
- LoRa
- Cellular LPWA
- RPMA
- LTE CAT-M

KYOCERA AVX's Universal Broadband Embedded LTE/LPWA antenna utilizes Isolated Magnetic Dipole™ (IMD) technology which address the challenges facing today's product designers. IMD's high performance and isolation characteristics offer better connectivity and minimal interference. Mirrored version variant offered as P822602.

Stays in Tune

KYOCERA AVX antennas use patented IMD technology in many antenna configurations to provide high performance. IMD antennas requires a smaller design keep-out area, carry lower program development risk which yields a quicker time-to-market, without sacrificing RF performance.

Electrical Specifications

Typical P822601/P822602 performance 140 x 50 mm PCB

Frequency (MHz)	698-960	1710-2200	2500-2700 (B7)	2300-2400 (Band 40)	3300-3800 (n78)
Peak Gain	2.6 dBi	4.4 dBi	3.4 dBi	1.8 dBi	2.8 dBi
Average Efficiency	68%	76%	52%	46%	59%
VSWR Match	< 2.5:1			< 3.0:1	< 2.5:1
Polarization	Linear				
Power Handling	2 Watt CW				
Feed Point Impedance	50 Ω unbalanced				

Mechanical Specifications & Ordering Part Number

Ordering Part #	P822601	P822602
Dimensions (mm)	49.6 x 8.0 x 3.2	49.6 x 8.0 x 3.2
Mounting Type	SMT (P&P)	
Variant	P822602 : Mirrored version of P822601	
Weight (grams)	2.63	
Packaging	Tape and Reel	
Storage Temperature/ Humidity (Sealed shipping package)	+5°C to +35°C 45~75%	
Operating Temperature	-40 to +85 C	
Demo Board	P822601-01 (P822601) P822602-01 (P822602)	

P822601 / P822602 Universal Broadband Embedded LTE/LPWA Antenna Specifications.
KYOCERA AVX produces a wide variety of standard and custom antennas to meet user needs.

LTE Bands covered by (P822601/P822602)

LTE Band	Frequency Band (MHz)	Uplink (UL) (MHz)	Downlink (DL) (MHz)	Region	Covered
1	2100	1920 - 1980	2110 - 2170	Global	Yes
2	1900	1850 - 1910	1930 - 1990	NAM	
3	1800	1710 - 1785	1805 - 1880	Global	
4	1700	1710 - 1755	2110 - 2155	NAM	
5	850	824 - 849	869 - 894	NAM	
6	850	830 - 840	875 - 885	APAC	
7	2600	2500 - 2570	2620 - 2690	EMEA	
8	900	880 - 915	925 - 960	Global	
9	1800	1749.9 - 1784.9	1844.9 - 1879.9	APAC	
10	1700	1710 - 1770	2110 - 2170	NAM	
11	1500	1427.9 - 1447.9	1475.9 - 1495.9	Japan	No
12	700	699 - 716	729 - 746	NAM	Yes
13	700	777 - 787	746 - 756	NAM	
14	700	788 - 798	758 - 768	NAM	
17	700	704 - 716	734 - 746	NAM	
18	850	815 - 830	860 - 875	Japan	
19	850	830 - 845	875 - 890	Japan	
20	800	832 - 862	791 - 821	EMEA	
21	1500	1447.9 - 1462.9	1495.9 - 1510.9	Japan	No
22	3500	3410 - 3490	3510 - 3590	EMEA	Yes
23	2000	2000 - 2020	2180 - 2200	NAM	
24	1600	1626.5 - 1660.5	1525 - 1559	NAM	No
25	1900	1850 - 1915	1930 - 1995	NAM	Yes
26	850	814 - 849	859 - 894	NAM	
27	850	807 - 824	852 - 869	NAM	
28	700	703 - 748	758 - 803	APAC,EU	
29	700	N/A	717 - 728	NAM	
30	2300	2305 - 23151	2350 - 2360	NAM	
31	450	452.5 - 457.5	462.5 - 467.5	Global	No
32	1500	N/A	1452 - 1496	EMEA	
33	1900	1900 - 1920			Yes
34	2000	2010 - 2025			
35	1850	1850 - 1910			
36	1900	1930 - 1990			
37	1900	1910 - 1930			
38	2600	2570 - 2620			
39	1900	1880 - 1920			
40	2300	2300 - 2400			
41	2500	2496 - 2690			
42	3500	3400 - 3600			
43	3700	3600 - 3800			

© 2022 KYOCERA AVX

tel +(1) 858.550.3820
email: antenna.info@kyocera-avx.com
1 Avx Blvd, Fountain Inn, SC 29644

P822601 / P822602 Universal Broadband Embedded LTE/LPWA Antenna Specifications.
KYOCERA AVX produces a wide variety of standard and custom antennas to meet user needs.

Antenna Dimensions (P822601)

Typical antenna dimensions (mm)

Part Number	A	B	C
P822601	49.6 ± 0.2	8.0 ± 0.2	3.2 ± 0.32

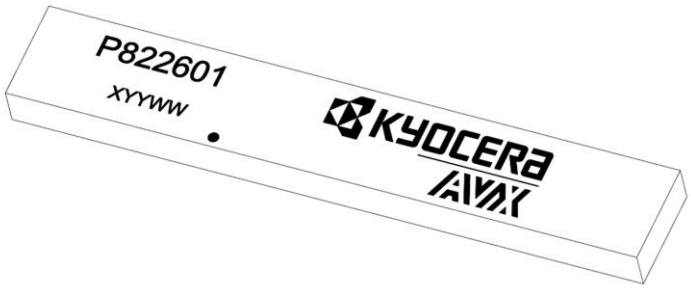

Top View

Pin#	Description
1	Feed
2	Ground
3	Dummy Pad
4	Low Band Tuning
5	High Band Tuning
6	Dummy Pad
7	Dummy Pad

Front View/Height

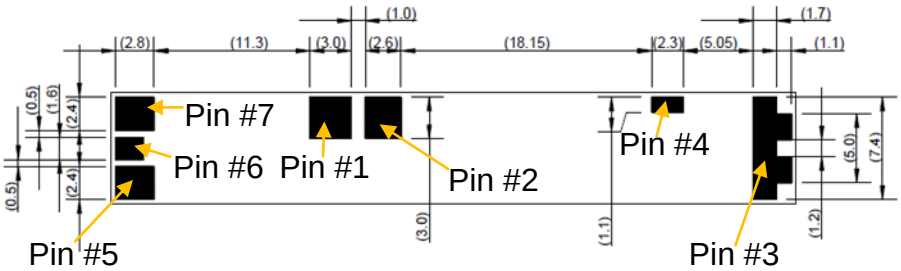

Bottom View

tel +(1) 858.550.3820
email: antenna.info@kyocera-avx.com
1 Avx Blvd, Fountain Inn, SC 29644

P822601 / P822602 Universal Broadband Embedded LTE/LPWA Antenna Specifications.
KYOCERA AVX produces a wide variety of standard and custom antennas to meet user needs.

Antenna Dimensions (P822602)

Typical antenna dimensions (mm)

Part Number	A	B	C
P822602	49.6 ± 0.2	8.0 ± 0.2	3.2 ± 0.32

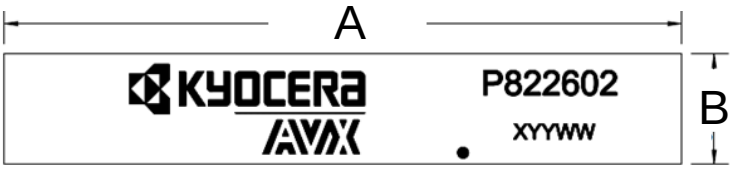

Top View

Pin#	Description
1	Feed
2	Ground
3	Dummy Pad
4	Low Band Tuning
5	High Band Tuning
6	Dummy Pad
7	Dummy Pad

Front View/Height

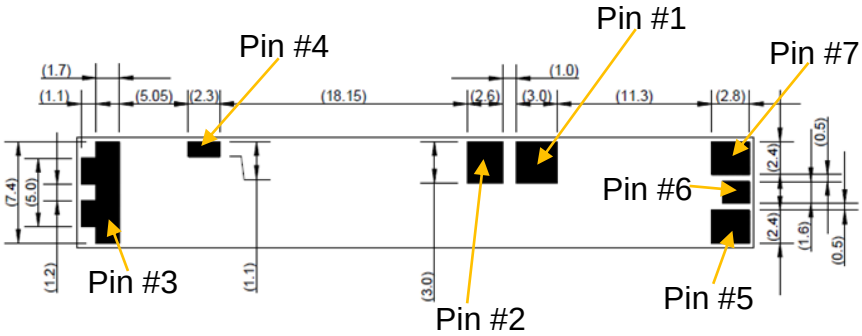

Bottom View

tel +(1) 858.550.3820
email: antenna.info@kyocera-avx.com
1 Avx Blvd, Fountain Inn, SC 29644

P822601 / P822602 Universal Broadband Embedded LTE/LPWA Antenna Specifications.
KYOCERA AVX produces a wide variety of standard and custom antennas to meet user needs.

VSWR and Efficiency Plots

Typical P822601/P822602 performance 140 x 50 mm PCB

Low Band VSWR

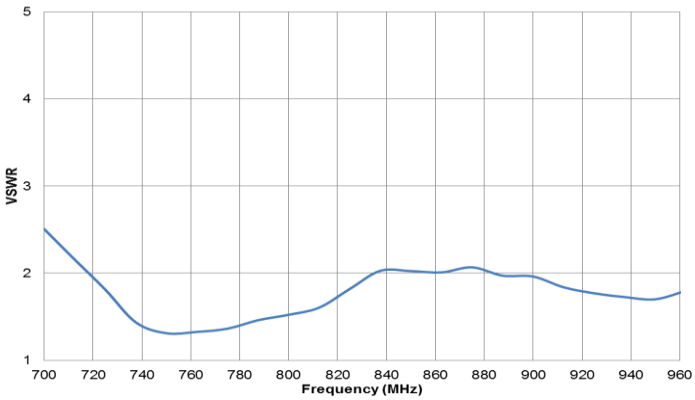

Low Band Efficiency

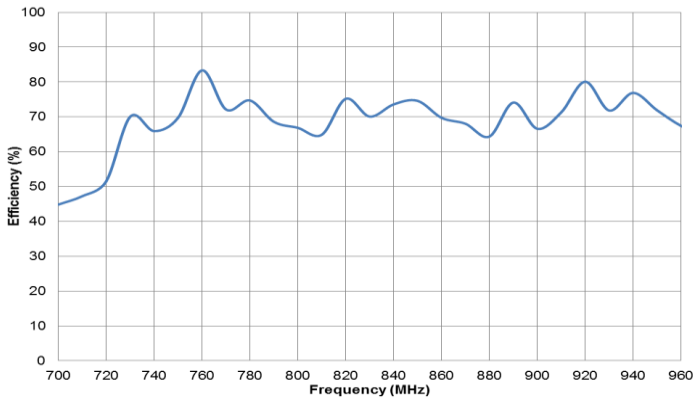

High Band VSWR

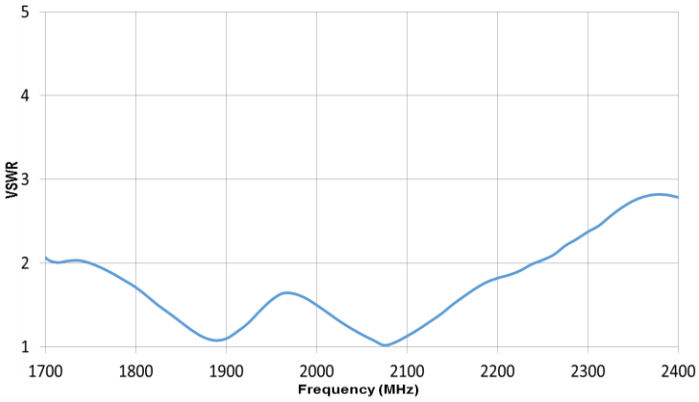

High Band Efficiency

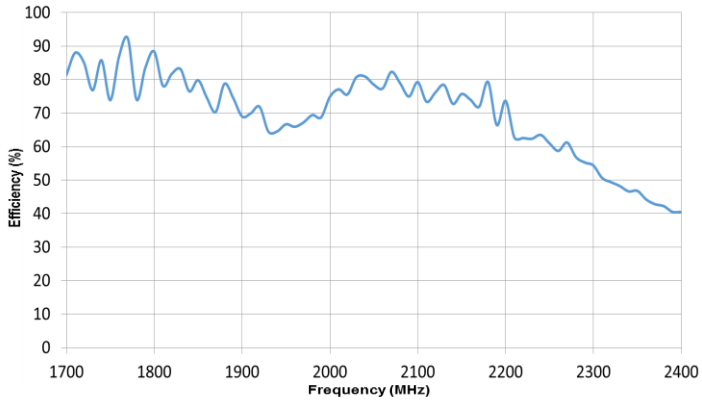

Band 7 VSWR

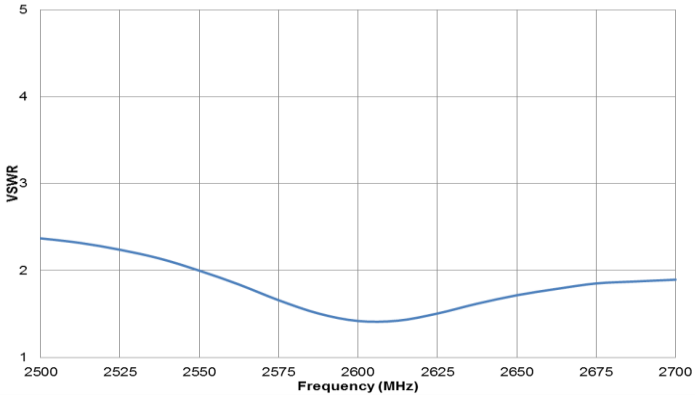

Band 7 Efficiency

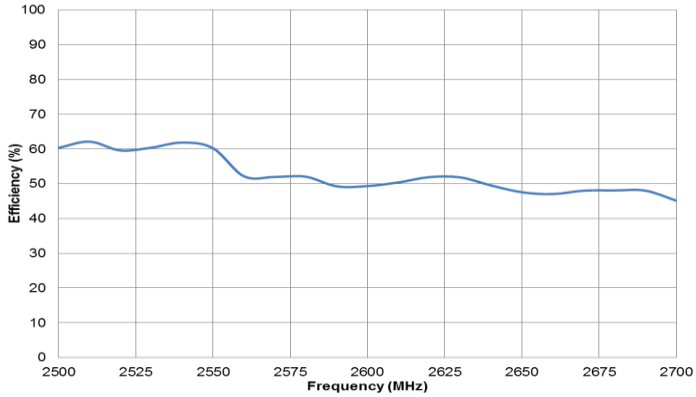

© 2022 KYOCERA AVX

tel +(1) 858.550.3820
email: antenna.info@kyocera-avx.com
1 Avx Blvd, Fountain Inn, SC 29644

P822601 / P822602 Universal Broadband Embedded LTE/LPWA Antenna Specifications.
KYOCERA AVX produces a wide variety of standard and custom antennas to meet user needs.

VSWR and Efficiency Plots

Typical P822601/P822602 performance 140 x 50 mm PCB

Band 40 VSWR

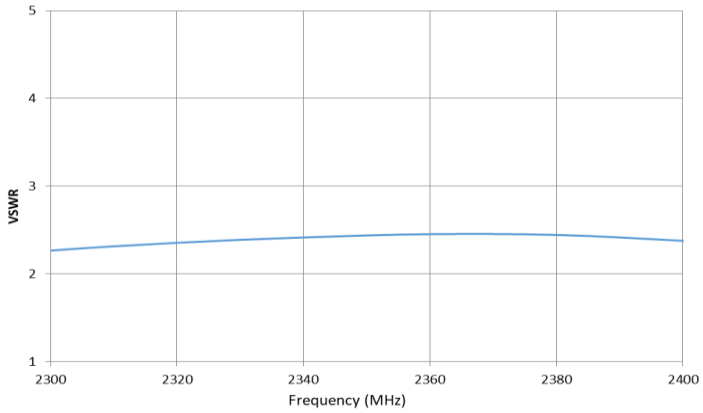

Band 40 Efficiency

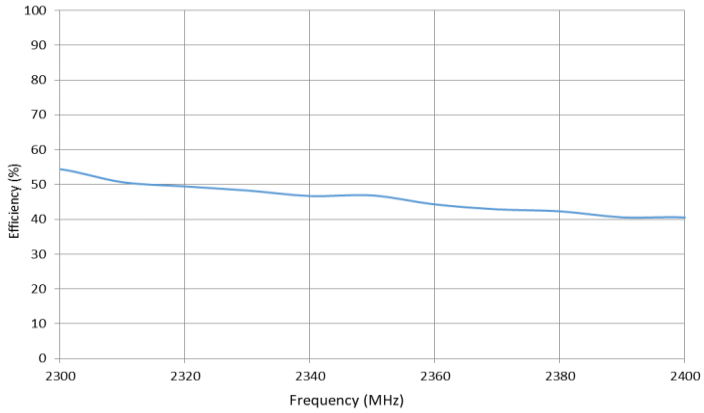

n78 VSWR

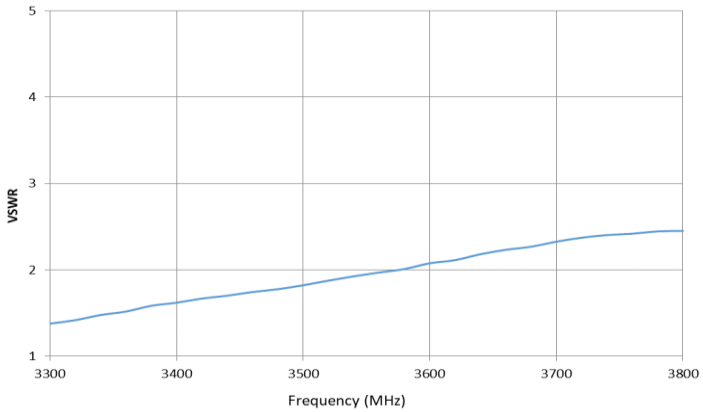

n78 Efficiency

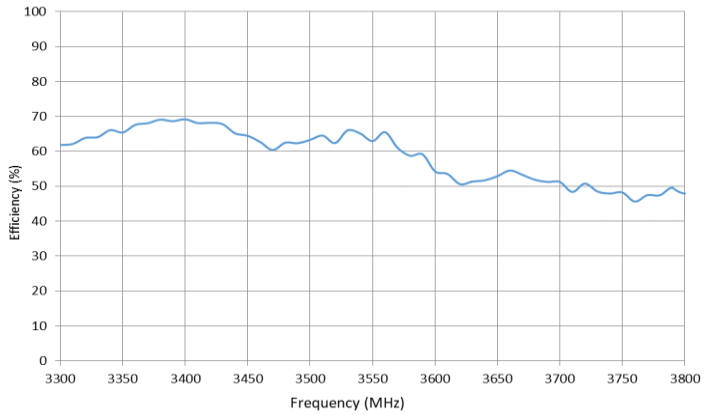

© 2022 KYOCERA AVX

tel +(1) 858.550.3820
email: antenna.info@kyocera-avx.com
1 Avx Blvd, Fountain Inn, SC 29644

P822601 / P822602 Universal Broadband Embedded LTE/LPWA Antenna Specifications.
KYOCERA AVX produces a wide variety of standard and custom antennas to meet user needs.

Antenna Radiation Patterns – Low / High Band (LTE)

Typical P822601/P822602 performance 140 x 50 mm PCB

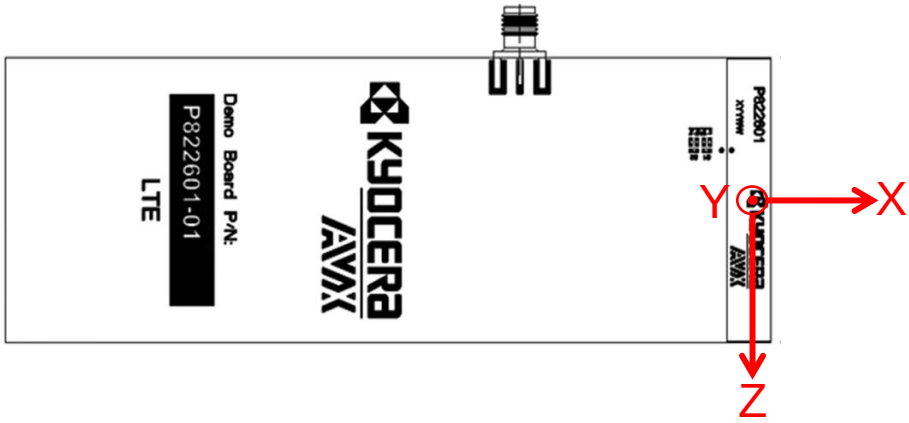

Low Band measured at 700, 750, 850, 900 MHz

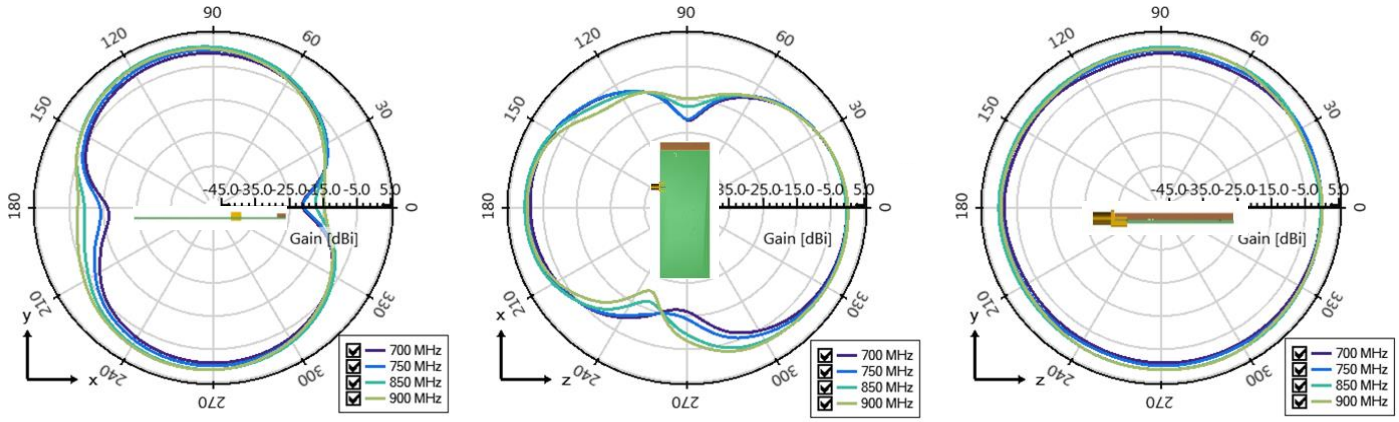

High Band measured at 1800, 1900, 2100 MHz

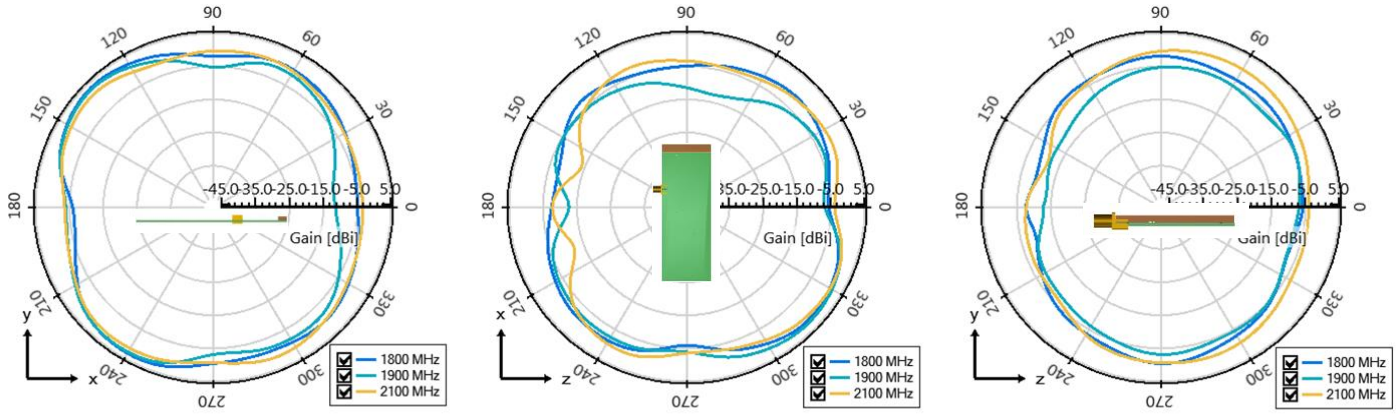

tel +(1) 858.550.3820
email: antenna.info@kyocera-avx.com
1 Avx Blvd, Fountain Inn, SC 29644

P822601 / P822602 Universal Broadband Embedded LTE/LPWA Antenna Specifications.
KYOCERA AVX produces a wide variety of standard and custom antennas to meet user needs.

Antenna Radiation Patterns – Band 40, Band 7

Typical P822601/P822602 performance 140 x 50 mm PCB

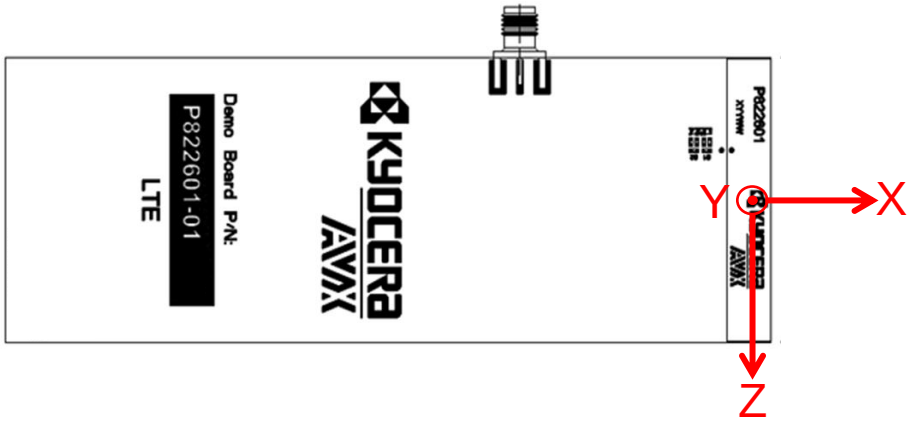

Band 40 measured at 2350 MHz

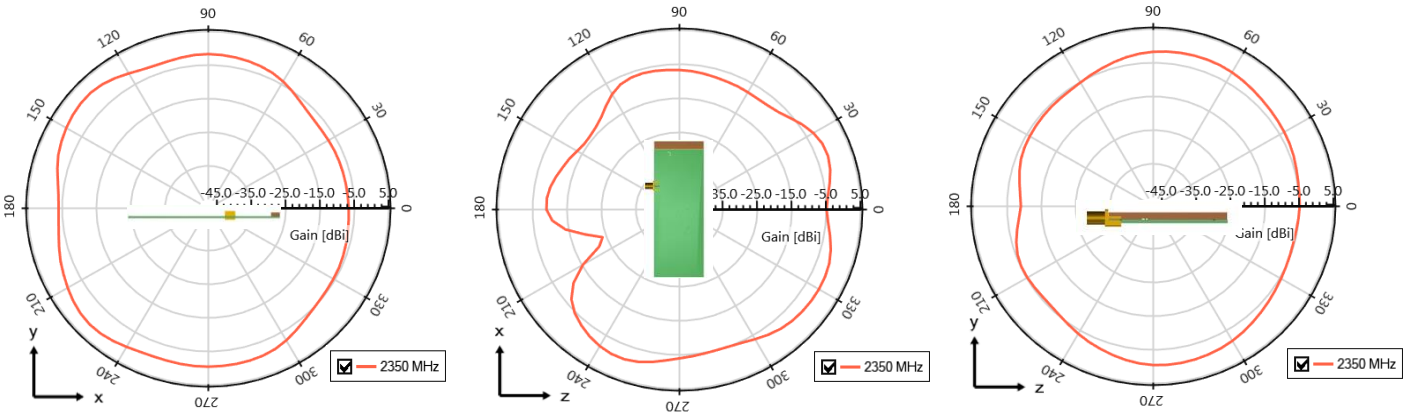

Band 7 measured at 2600 MHz

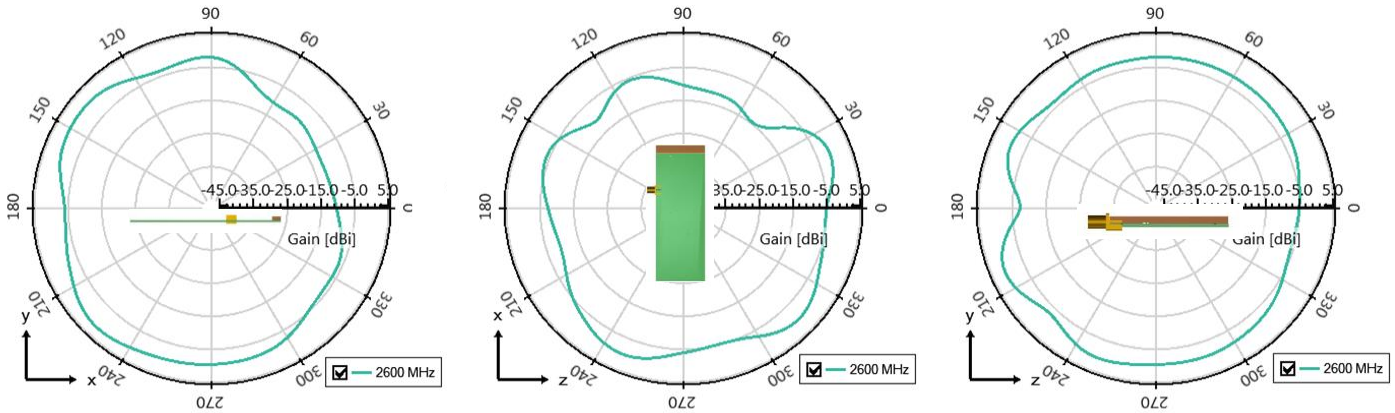

tel +(1) 858.550.3820
email: antenna.info@kyocera-avx.com
1 Avx Blvd, Fountain Inn, SC 29644

P822601 / P822602 Universal Broadband Embedded LTE/LPWA Antenna Specifications.
KYOCERA AVX produces a wide variety of standard and custom antennas to meet user needs.

Antenna Radiation Patterns – n78

Typical P822601/P822602 performance 140 x 50 mm PCB

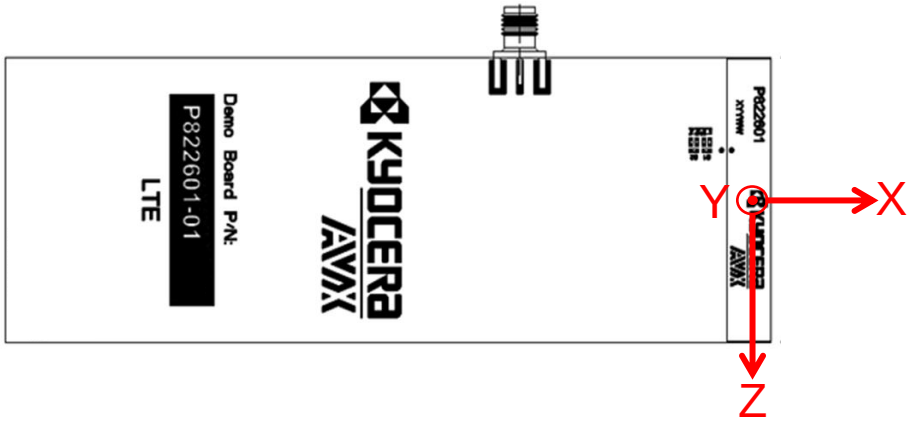

n78 measured at 3500 MHz

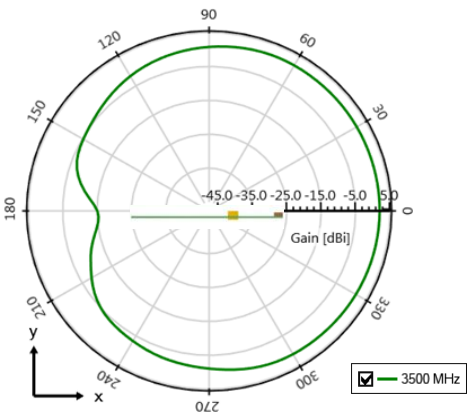

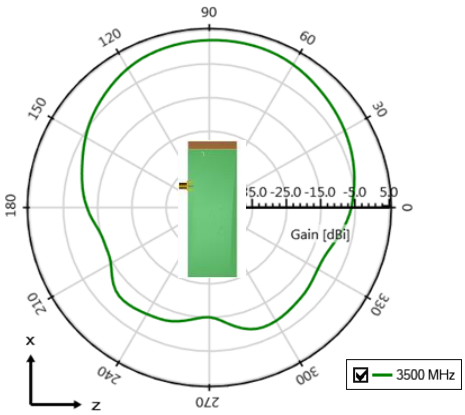

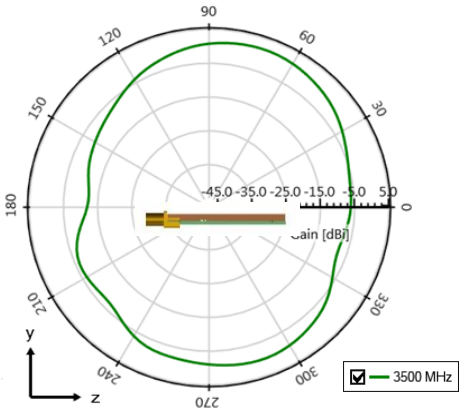

tel +(1) 858.550.3820
email: antenna.info@kyocera-avx.com
1 Avx Blvd, Fountain Inn, SC 29644

P822601 / P822602 Universal Broadband Embedded LTE/LPWA Antenna Specifications.
KYOCERA AVX produces a wide variety of standard and custom antennas to meet user needs.

Antenna Layout (P822601)

Typical layout dimensions (mm)

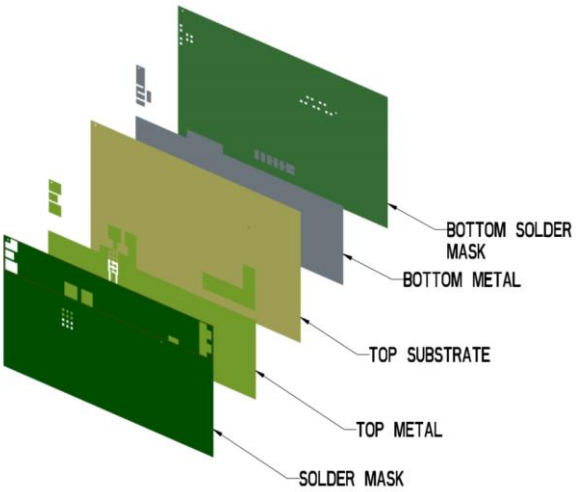

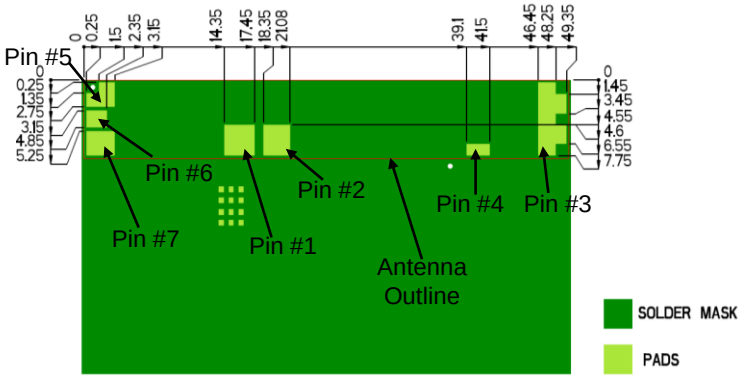

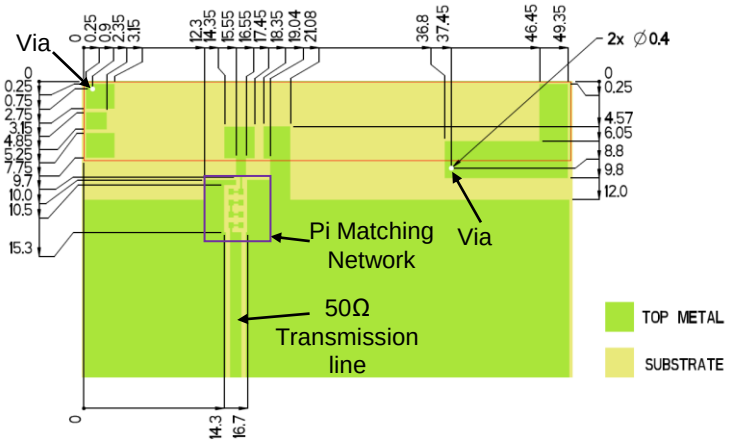

- Additional VIAS: Diam. 0.2mm to be placed around antenna, (no vias on transmission lines).
- Via holes must be covered by solder mask

Pin Descriptions

Pin#	Description
1	Feed
2	Ground
3	Dummy Pad
4	Low Band Tuning
5	High Band Tuning
6	Dummy Pad
7	Dummy Pad

*P822602 uses the same layout but mirrored.

Default Pi Matching Network values with instructions can be found under Antenna Matching Network.

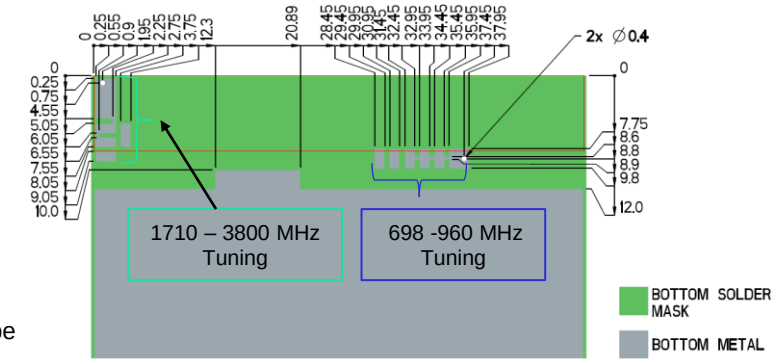

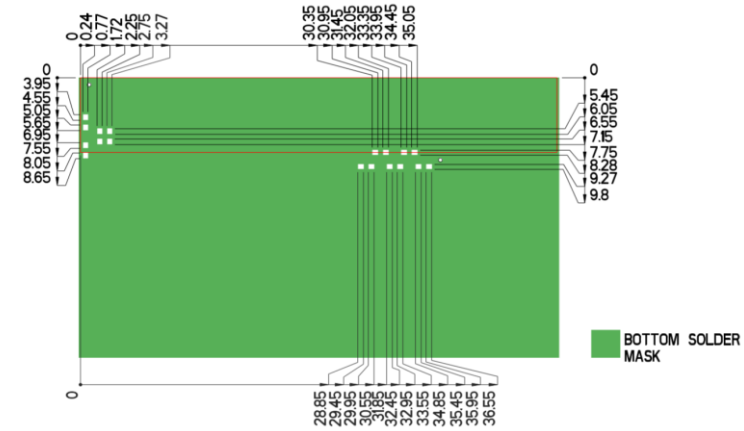

tel +(1) 858.550.3820
email: antenna.info@kyocera-avx.com
1 Avx Blvd, Fountain Inn, SC 29644

P822601 / P822602 Universal Broadband Embedded LTE/LPWA Antenna Specifications.
KYOCERA AVX produces a wide variety of standard and custom antennas to meet user needs.

Antenna Layout (P822602)

Typical layout dimensions (mm)

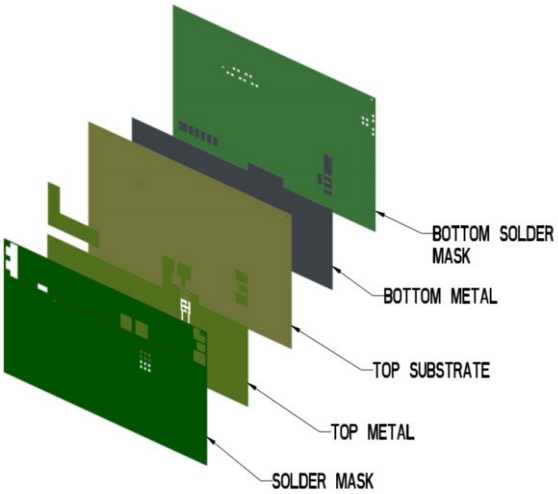

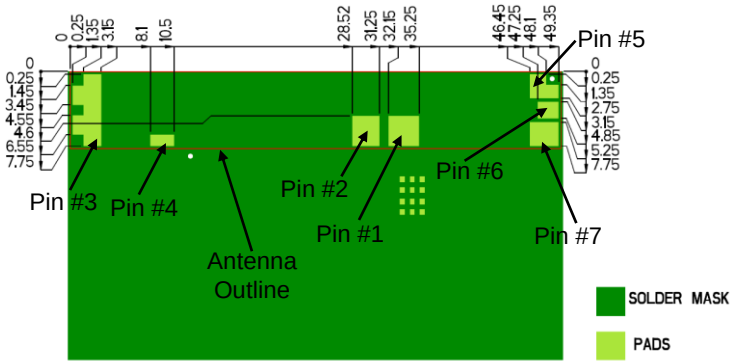

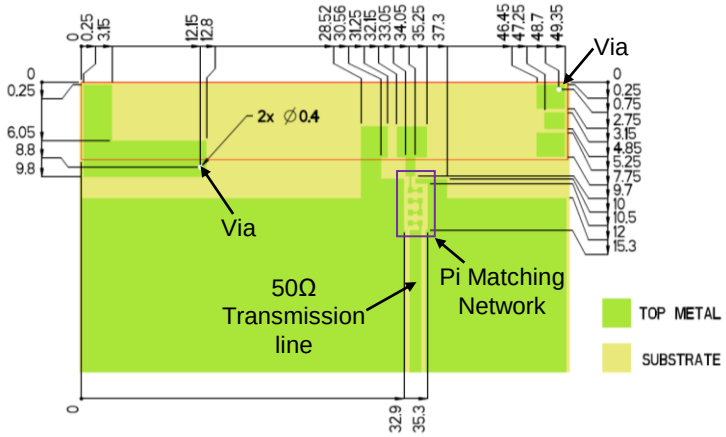

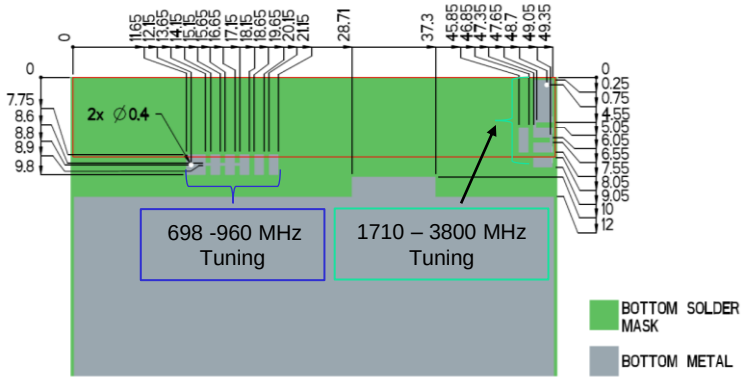

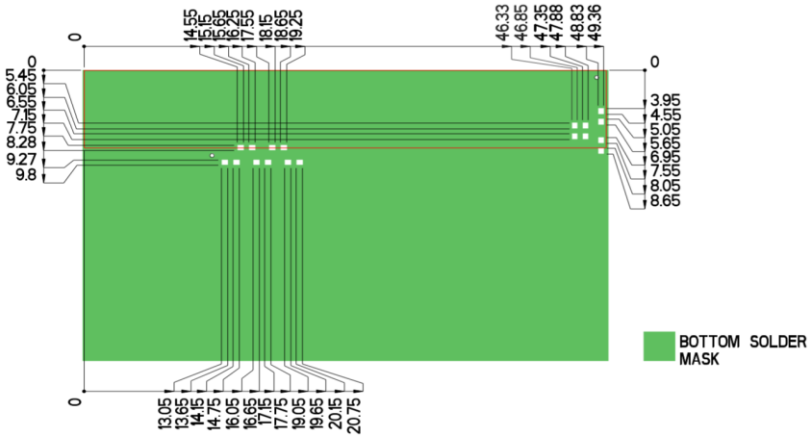

- Additional VIAS : Diam. 0.2mm to be placed around antenna, (no vias on transmission lines).
- Via holes must be covered by solder mask

Pin Descriptions

Pin#	Description
1	Feed
2	Ground
3	Dummy Pad
4	Low Band Tuning
5	High Band Tuning
6	Dummy Pad
7	Dummy Pad

*P822601 uses the same layout but mirrored.

Default Pi Matching Network values with instructions can be found under Antenna Matching Structure.

© 2022 KYOCERA AVX

tel +(1) 858.550.3820
email: antenna.info@kyocera-avx.com
1 Avx Blvd, Fountain Inn, SC 29644

P822601 / P822602 Universal Broadband Embedded LTE/LPWA Antenna Specifications.
KYOCERA AVX produces a wide variety of standard and custom antennas to meet user needs.

Antenna Matching Structure (P822601)

Typical matching values on 140 x 50 mm PCB

Demo Board Front View

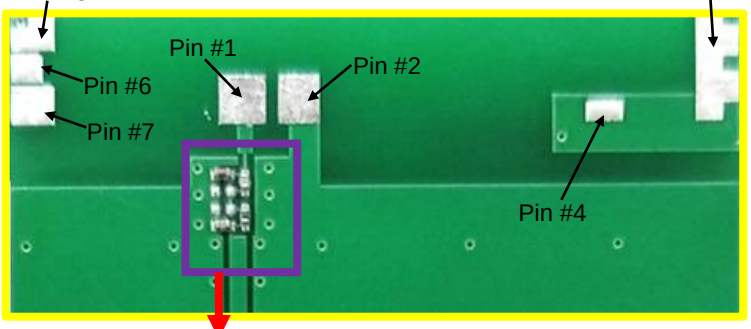

Demo Board Back View

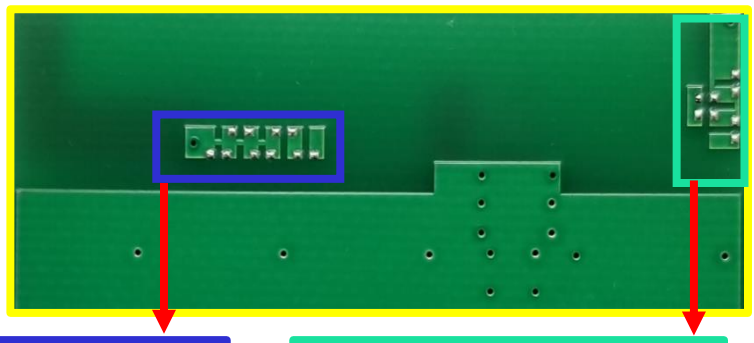

Antenna Matching

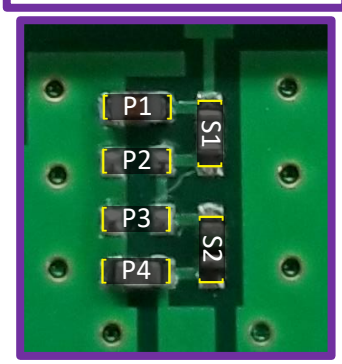

(Antenna Matching): pads are directly inline with the antenna feed trace.

698-960 MHz Tuning

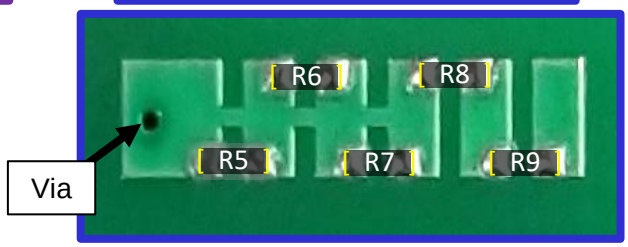

1710-3800 MHz Tuning

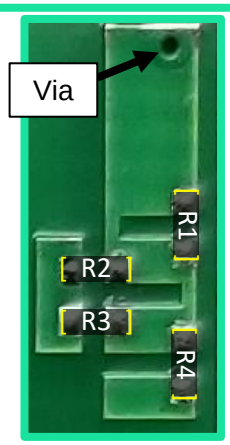

Pin Descriptions

Pin#	Description
1	Feed
2	Ground
3	Dummy Pad
4	Low Band Tuning
5	High Band Tuning
6	Dummy Pad
7	Dummy Pad

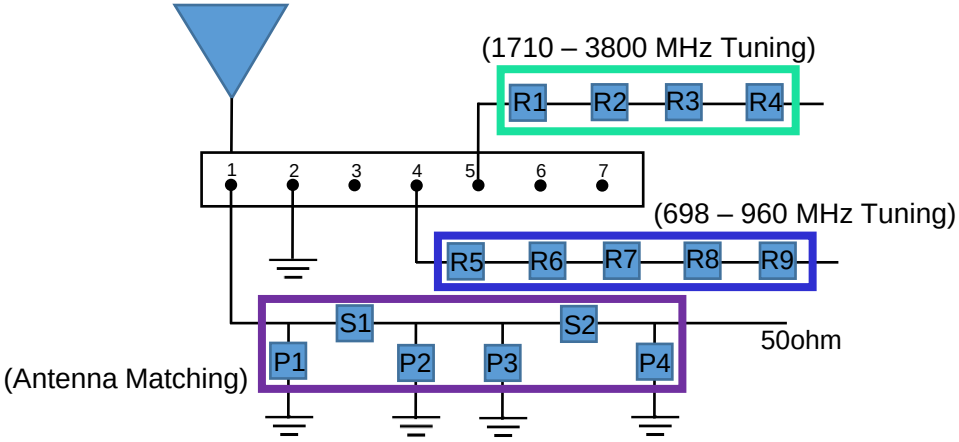

*P822602 uses same matching values

	P1	S1	P2	P3	S2	P4	R1-R4	R5-R9
Default Matching	24nH	2.4pF	DNI	DNI	1.0nH	0.3pF	DNI	DNI
Tolerance	± 20%	± 0.25pF	N/A	N/A	± 0.3nH	± 0.1pF	N/A	N/A

© 2022 KYOCERA AVX

tel +(1) 858.550.3820
email: antenna.info@kyocera-avx.com
1 Avx Blvd, Fountain Inn, SC 29644

P822601 / P822602 Universal Broadband Embedded LTE/LPWA Antenna Specifications.
KYOCERA AVX produces a wide variety of standard and custom antennas to meet user needs.

Antenna Matching Structure (P822601)

Typical matching values on 140 x 50 mm PCB

Demo Board Back

1710-3800 MHz Tuning

698-960 MHz Tuning

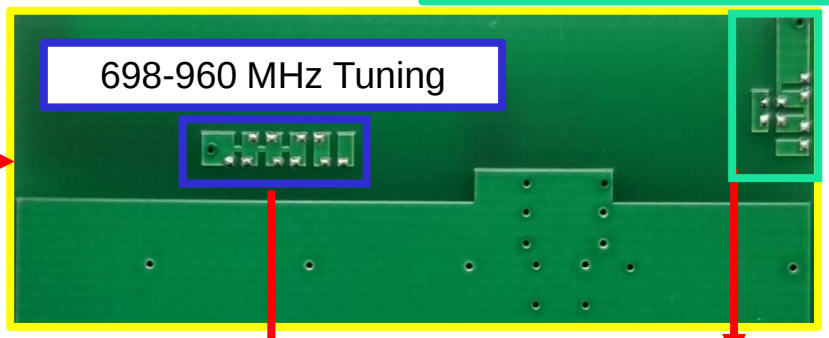

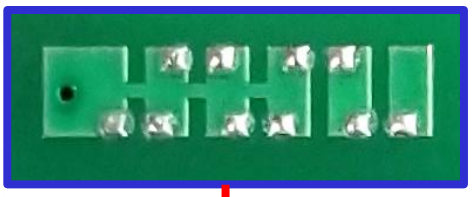

*P822602 uses same tuning method but on mirrored layout

Ex. Tuning Layout

(1) Shift Frequency Lower (Adding Components)

***Bridging gaps with 0 ohm resistors shifts resonant frequency lower**

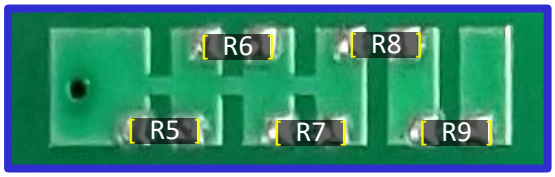

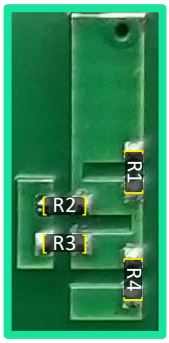

(2) Shift Frequency Higher (Cut Bridge Traces)

***Cut Trace between pads shifts resonant frequency higher**

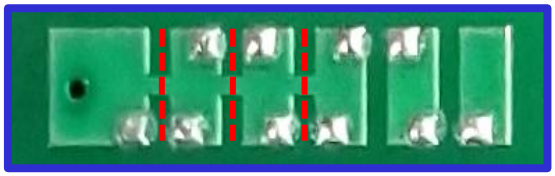

tel +(1) 858.550.3820
email: antenna.info@kyocera-avx.com
1 Avx Blvd, Fountain Inn, SC 29644

P822601 / P822602 Universal Broadband Embedded LTE/LPWA Antenna Specifications.
KYOCERA AVX produces a wide variety of standard and custom antennas to meet user needs.

Antenna Demo Board (P822601-01)

Demo Board Front/Back View

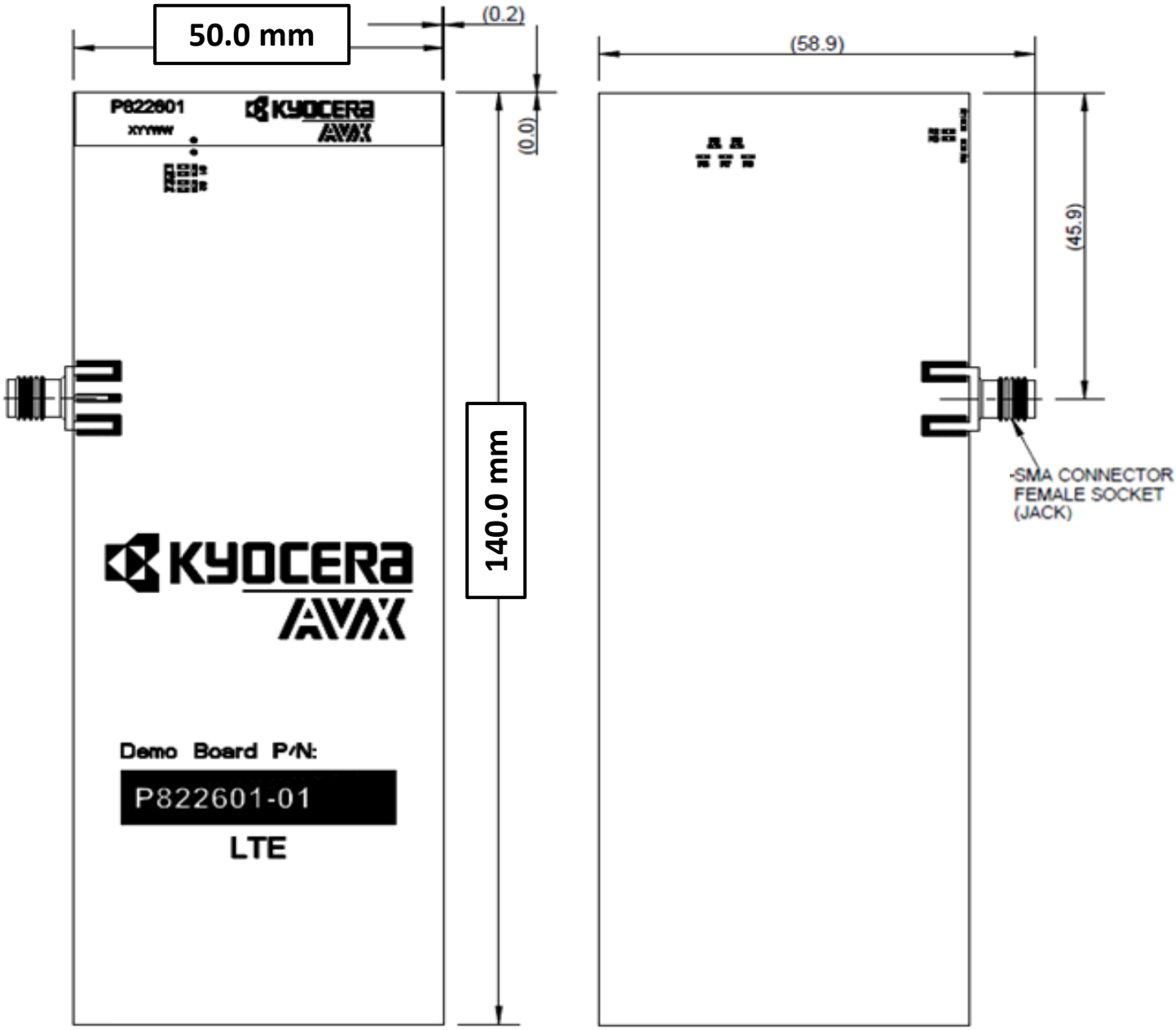

tel +(1) 858.550.3820
email: antenna.info@kyocera-avx.com
1 Avx Blvd, Fountain Inn, SC 29644

P822601 / P822602 Universal Broadband Embedded LTE/LPWA Antenna Specifications.
KYOCERA AVX produces a wide variety of standard and custom antennas to meet user needs.

Antenna Demo Board (P822602-01)

Demo Board Front/Back View

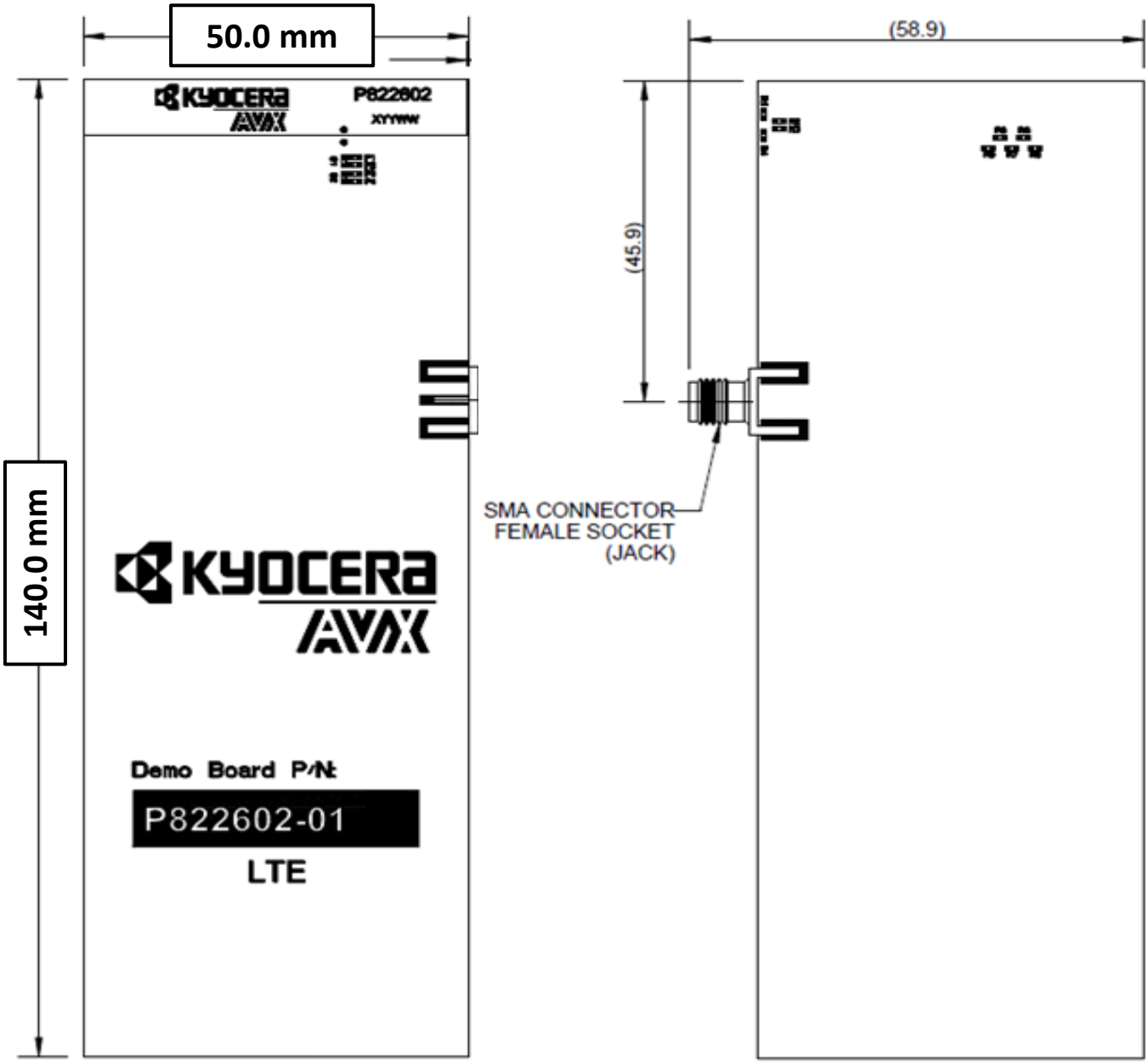

tel +(1) 858.550.3820
email: antenna.info@kyocera-avx.com
1 Avx Blvd, Fountain Inn, SC 29644

P822601 / P822602 Universal Broadband Embedded LTE/LPWA Antenna Specifications.
KYOCERA AVX produces a wide variety of standard and custom antennas to meet user needs.

Recommended Reflow Soldering Profile

The recommended method for soldering the antenna to the board is forced convection reflow soldering. The following suggestions provide information on how to optimize the reflow process for the FR4 antenna:

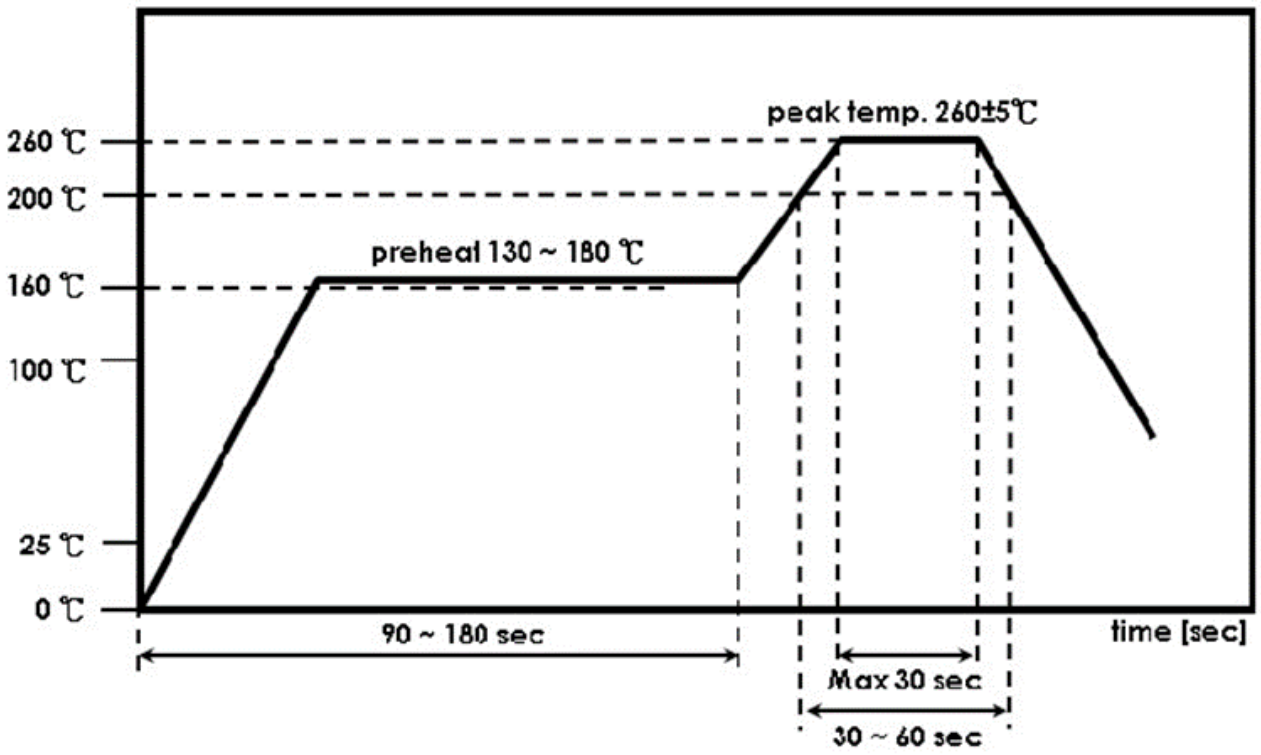

*Adjust the reflow duration to create good solder joints without raising the antenna temperature beyond the allowed maximum of 260° C.

tel +(1) 858.550.3820
email: antenna.info@kyocera-avx.com
1 Avx Blvd, Fountain Inn, SC 29644