Radio Test Report

FCC ID: 2AA2K-Z3SC

Report No.	:	TBR-C-202301-0043-2
Applicant	:	CANSONIC INC.
Equipment Under Test (EUT)		
EUT Name	:	Dash cam
Model No.	:	Z3+C
Series Model No.	:	Z3+
Brand Name	:	UltraDash
Sample ID	:	RW-C-202301-0043-2-1# & RW-C-202301-0043-2-2#
Receipt Date	:	2023-01-09
Test Date	:	2023-01-09 to 2023-02-02
Issue Date	:	2023-02-14
Standards	:	FCC Part 15 Subpart C 15.247
Test Method	:	ANSI C63.10: 2013 KDB 558074 D01 15.247 Meas Guidance v05r02
Conclusions	:	**PASS** In the configuration tested, the EUT complied with the standards specified above.
Witness Engineer	:	Wade. Lv
Engineer Supervisor	:	IVAN SU
Engineer Manager	:	Ray Lai.

Wade. Lv

Ivan Su

Ray Lai

This report details the results of the testing carried out on one sample. The results contained in this test report do not relate to other samples of the same product. The manufacturer should ensure that all products in series production are in conformity with the product sample detailed in the report.

TB-RF-074-1.0

Contents

CONTENTS **2**
1. GENERAL INFORMATION ABOUT EUT **5**
1.1 Client Information 5
1.2 General Description of EUT (Equipment Under Test) 5
1.3 Block Diagram Showing the Configuration of System Tested 6
1.4 Description of Support Units 7
1.5 Description of Test Mode 7
1.6 Description of Test Software Setting 9
1.7 Measurement Uncertainty 9
1.8 Test Facility 10
2. TEST SUMMARY **11**
3. TEST SOFTWARE **11**
4. TEST EQUIPMENT **12**
5. CONDUCTED EMISSION TEST **14**
5.1 Test Standard and Limit 14
5.2 Test Setup 14
5.3 Test Procedure 14
5.4 Deviation From Test Standard 15
5.5 EUT Operating Mode 15
5.6 Test Data 15
6. RADIATED AND CONDUCTED UNWANTED EMISSIONS **16**
6.1 Test Standard and Limit 16
6.2 Test Setup 18
6.3 Test Procedure 19
6.4 Deviation From Test Standard 20
6.5 EUT Operating Mode 20
6.6 Test Data 20
7. RESTRICTED BANDS REQUIREMENT **21**
7.1 Test Standard and Limit 21
7.2 Test Setup 21
7.3 Test Procedure 22
7.4 Deviation From Test Standard 23

7.5 EUT Operating Mode 23
7.6 Test Data 23
8. BANDWIDTH TEST 24
8.1 Test Standard and Limit 24
8.2 Test Setup 24
8.3 Test Procedure 24
8.4 Deviation From Test Standard 25
8.5 EUT Operating Mode 25
8.6 Test Data 25
9. PEAK OUTPUT POWER 26
9.1 Test Standard and Limit 26
9.2 Test Setup 26
9.3 Test Procedure 26
9.4 Deviation From Test Standard 26
9.5 EUT Operating Mode 26
9.6 Test Data 26
10. POWER SPECTRAL DENSITY 27
10.1 Test Standard and Limit 27
10.2 Test Setup 27
10.3 Test Procedure 27
10.4 Deviation From Test Standard 27
10.5 Antenna Connected Construction 27
10.6 Test Data 27
11. ANTENNA REQUIREMENT 28
11.1 Test Standard and Limit 28
11.2 Deviation From Test Standard 28
11.3 Antenna Connected Construction 28
11.4 Test Data 28
ATTACHMENT A-- CONDUCTED EMISSION TEST DATA 29
ATTACHMENT B--UNWANTED EMISSIONS DATA 31

Revision History

Report No.	Version	Description	Issued Date
TBR-C-202301-0043-2	Rev.01	Initial issue of report	2023-02-14

1. General Information about EUT

1.1 Client Information

Applicant	:	CANSONIC INC.
Address	:	10F., No. 359, Dehe Rd., Yonghe Dist., New Taipei City, Taiwan
Manufacturer	:	Cansonic Company Limited
Address	:	3/F, Building 1, Guanlan Industrial Park, Grain Group, 299 Guanping Road, Nan Dafu Community, Guanlan, Longhua New District, Shenzhen, China

1.2 General Description of EUT (Equipment Under Test)

EUT Name	:	Dash cam	
Models No.	:	Z3+C, Z3+	
Model Different	:	All PCB boards and circuit diagrams are the same, the only difference is that model names.	
Product Description	:	Operation Frequency:	802.11b/g/n(HT20): 2412MHz~2462MHz 802.11n(HT40): 2422MHz~2452MHz
		Number of Channel:	802.11b/g/n(HT20):11 channels 802.11n(HT40): 7 channels
		Antenna Gain:	1.52dBi FPC Antenna
		Modulation Type:	802.11b: DSSS(CCK, DQPSK, DBPSK) 802.11g/n:OFDM(BPSK,QPSK,16QAM,64QAM)
		Bit Rate of Transmitter:	802.11b:11/5.5/2/1 Mbps 802.11g:54/48/36/24/18/12/9/6 Mbps 802.11n:up to 150Mbps
Power Rating	:	Input: 12V/24V⎓2A; 5V⎓1.5A	
Li-ion Polymer Battery	:	DC 3.0V by 5.8mAh Rechargeable Li-ion battery	
Software Version	:	Z3+_x_x_xxxxxx_x(Z3+_2.0_BCZAZD_F)	
Hardware Version	:	Z3S_670_MAIN_V0.2	

Remark:
(1)The antenna gain and adapter provided by the applicant, the verified for the RF conduction test provided by TOBY test lab.
(2)For a more detailed features description, please refer to the manufacturer's specifications or the User's Manual.
(3)Antenna information provided by the applicant.

(4)Channel List:

Channel	Frequency (MHz)	Channel	Frequency (MHz)	Channel	Frequency (MHz)
01	**2412**	05	2432	09	2452
02	2417	**06**	**2437**	10	2457
03	2422	07	2442	**11**	**2462**
04	2427	08	2447		
Note: CH 01~CH 11 for 802.11b/g/n(HT20) CH 03~CH 09 for 802.11n(HT40)					

1.3 Block Diagram Showing the Configuration of System Tested

Conducted Test

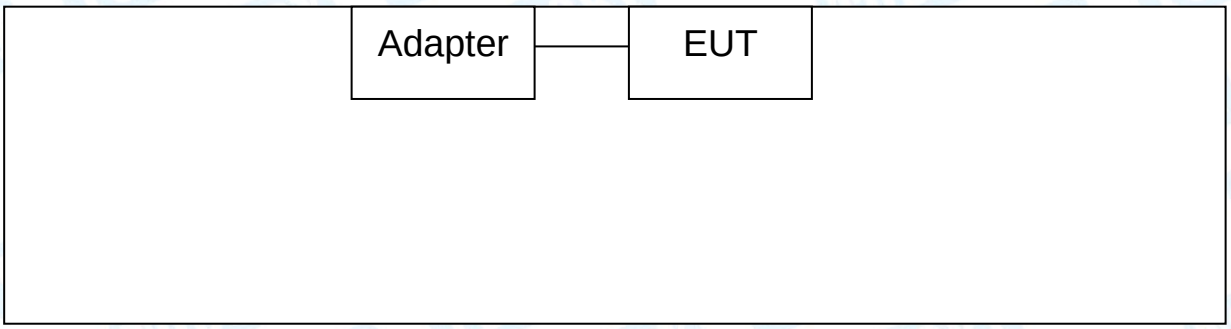

Radiated Test

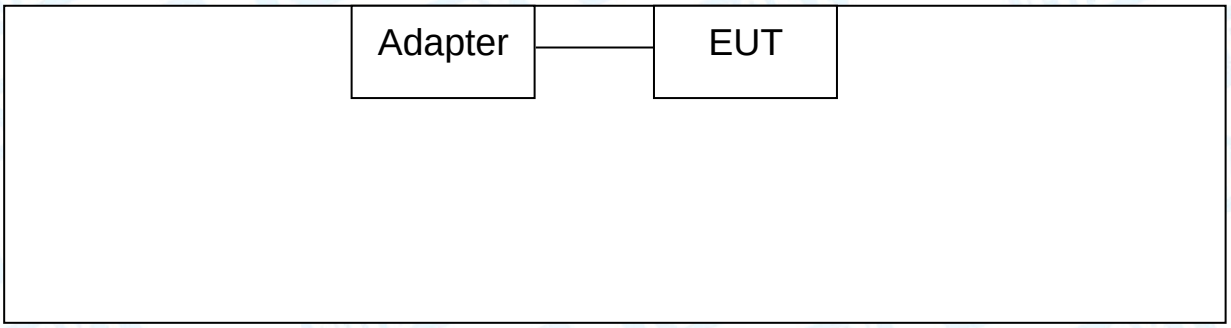

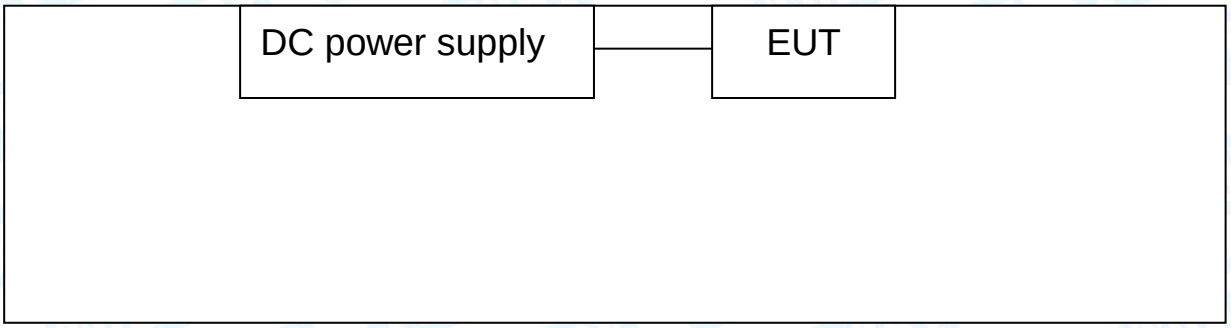

1.4 Description of Support Units

Equipment Information				
Name	**Model**	**FCC ID/SDOC**	**Manufacturer**	**Used "√"**
Adapter	-----	-----	HUAWEI	---
DC power supply	-----	-----	-----	-----
Cable Information				
Number	**Shielded Type**	**Ferrite Core**	**Length**	**Note**
Cable 1	NO	NO	1.2m	Accessory
Remark: the USB Cable provided by the Applicant, The adapter provided by TOBY test lab.				

1.5 Description of Test Mode

To investigate the maximum EMI emission characteristics generates from EUT, the test system was pre-scanning tested base on the consideration of following EUT operation mode or test configuration mode which possible have effect on EMI emission level. Each of these EUT operation mode(s) or test configuration mode(s) mentioned follow was evaluated respectively.

For Conducted Emission Test	
Final Test Mode	**Description**
Mode 1	Adapter+ TX Mode b Mode Channel 01
For Radiated and RF Conducted Test	
Final Test Mode	**Description**
Mode 2	Adapter+ TX Mode b Mode Channel 01
Mode 3	DC power supply+ TX Mode b Mode Channel 01
Mode 4	TX Mode b Mode Channel 01/06/11
Mode 5	TX Mode g Mode Channel 01/06/11
Mode 6	TX Mode n(HT20) Mode Channel 01/06/11
Mode 7	TX Mode n(HT40) Mode Channel 03/06/09

Note:

(1) For all test, we have verified the construction and function in typical operation. And all the test modes were carried out with the EUT in transmitting operation in maximum power with all kinds of data rate.

According to ANSI C63.10 standards, the measurements are performed at the highest, middle, lowest available channels, and the worst case data rate as follows:

802.11b Mode: CCK

802.11g Mode: OFDM

802.11n (HT20/40) Mode: MCS 0

802.11n (HT40) Mode: MCS 0

(2) During the testing procedure, the continuously transmitting with the maximum power mode was programmed by the customer.

(3) The EUT is considered a portable unit; in normal use it was positioned on X-plane. The worst case was found positioned on X-plane. Therefore only the test data of this X-plane was used for radiated emission measurement test.

1.6 Description of Test Software Setting

During testing channel& Power controlling software provided by the customer was used to control the operating channel as well as the output power level. The RF output power selection is for the setting of RF output power expected by the customer and is going to be fixed on the firmware of the final end product power parameters of RF setting.

Test Software: SecureCRT			
	Test Mode: Continuously transmitting		
Mode	**Data Rate**	**Channel**	**Parameters**
802.11b	CCK/ 1Mbps	01	28
	CCK/ 1Mbps	06	29
	CCK/ 1Mbps	11	30
802.11g	OFDM/ 6Mbps	01	38
	OFDM/ 6Mbps	06	37
	OFDM/ 6Mbps	11	37
802.11n(HT20)	MCS 0	01	39
	MCS 0	06	38
	MCS 0	11	38
802.11n(HT40)	MCS 0	03	39
	MCS 0	06	38
	MCS 0	09	38

1.7 Measurement Uncertainty

The reported uncertainty of measurement y±U，where expended uncertainty U is based on a standard uncertainty multiplied by a coverage factor of k=2，providing a level of confidence of approximately 95 %.

Test Item	**Parameters**	**Expanded Uncertainty (U_{Lab})**
Conducted Emission	Level Accuracy: 9kHz~150kHz 150kHz to 30MHz	±3.50 dB ±3.10 dB
Radiated Emission	Level Accuracy: 9kHz to 30 MHz	±4.60 dB
Radiated Emission	Level Accuracy: 30MHz to 1000 MHz	±4.50 dB
Radiated Emission	Level Accuracy: Above 1000MHz	±4.20 dB

1.8 Test Facility

The testing report were performed by the Shenzhen Toby Technology Co., Ltd., in their facilities located at 1/F., Building 6, Rundongsheng Industrial Zone, Longzhu, Xixiang, Bao'an District, Shenzhen, Guangdong, China. At the time of testing, the following bodies accredited the Laboratory:

CNAS (L5813)

The Laboratory has been accredited by CNAS to ISO/IEC 17025: 2017 General Requirements for the Competence of Testing and Calibration Laboratories for the competence in the field of testing. And the Registration No.: CNAS L5813.

A2LA Certificate No.: 4750.01

The laboratory has been accredited by American Association for Laboratory Accreditation(A2LA) to ISO/IEC 17025: 2017 General Requirements for the Competence of Testing and Calibration Laboratories for the technical competence in the field of Electrical Testing. And the A2LA Certificate No.: 4750.01.FCC Accredited Test Site Number: 854351. Designation Number: CN1223.

IC Registration No.: (11950A)

The Laboratory has been registered by Certification and Engineering Bureau of Industry Canada for radio equipment testing. The site registration: Site# 11950A. CAB identifier: CN0056.

2. Test Summary

Standard Section FCC	Test Item	Test Sample(s)	Judgment	Remark
FCC 15.207(a)	Conducted Emission	RW-C-202301-0043-2-1#	PASS	N/A
FCC 15.209 & 15.247(d)	Radiated Unwanted Emissions	RW-C-202301-0043-2-1#	PASS	N/A
FCC 15.203	Antenna Requirement	RW-C-202301-0043-2-2#	PASS	N/A
FCC 15.247(a)(2)	6dB Bandwidth	RW-C-202301-0043-2-2#	PASS	N/A
/	99% Occupied bandwidth	RW-C-202301-0043-2-2#	PASS	N/A
FCC 15.247(b)(3)	Peak Output Power and E.I.R.P	RW-C-202301-0043-2-2#	PASS	N/A
FCC 15.247(e)	Power Spectral Density	RW-C-202301-0043-2-2#	PASS	N/A
FCC 15.247(d)	Band Edge Measurements	RW-C-202301-0043-2-2#	PASS	N/A
FCC 15.207(a)	Conducted Unwanted Emissions	RW-C-202301-0043-2-2#	PASS	N/A
FCC 15.247(d)	Emissions in Restricted Bands	RW-C-202301-0043-2-2#	PASS	N/A
/	On Time and Duty Cycle	RW-C-202301-0043-2-2#	/	N/A

Note: N/A is an abbreviation for Not Applicable.

3. Test Software

Test Item	Test Software	Manufacturer	Version No.
Conducted Emission	EZ-EMC	EZ	CDI-03A2
Radiation Emission	EZ-EMC	EZ	FA-03A2RE
Radiation Emission	EZ-EMC	EZ	FA-03A2RE+
RF Conducted Measurement	MTS-8310	MWRFtest	V2.0.0.0
RF Test System	JS1120	Tonscend	V3.2.22

4. Test Equipment

Conducted Emission Test					
Equipment	**Manufacturer**	**Model No.**	**Serial No.**	**Last Cal.**	**Cal. Due Date**
EMI Test Receiver	Rohde & Schwarz	ESCI	100321	Jun. 23, 2022	Jun. 22, 2023
RF Switching Unit	Compliance Direction Systems Inc	RSU-A4	34403	Jun. 23, 2022	Jun. 22, 2023
AMN	SCHWARZBECK	NNBL 8226-2	8226-2/164	Jun. 22, 2022	Jun. 21, 2023
LISN	Rohde & Schwarz	ENV216	101131	Jun. 22, 2022	Jun. 21, 2023
ISN	SCHWARZBECK	NTFM 8131	8131-193	Jun. 22, 2022	Jun. 21, 2023
ISN	SCHWARZBECK	CAT3 8158	cat3 5158-0094	Jun. 22, 2022	Jun. 21, 2023
ISN	SCHWARZBECK	NTFM5158	NTFM5158 0145	Jun. 22, 2022	Jun. 21, 2023
ISN	SCHWARZBECK	CAT 8158	cat5 8158-179	Jun. 22, 2022	Jun. 21, 2023
Radiation Emission Test (B Site)					
Equipment	**Manufacturer**	**Model No.**	**Serial No.**	**Last Cal.**	**Cal. Due Date**
Spectrum Analyzer	Agilent	N9020A	MY49100060	Sep.01.2022	Aug. 31, 2023
Spectrum Analyzer	Rohde & Schwarz	FSV40-N	102197	Jun. 23, 2022	Jun. 22, 2023
EMI Test Receiver	Rohde & Schwarz	ESU-8	100472/008	Feb. 26, 2022	Feb.25, 2023
Bilog Antenna	SCHWARZBECK	VULB 9168	1225	Dec. 05, 2021	Dec. 04, 2023
Horn Antenna	SCHWARZBECK	BBHA 9120 D	2463	Feb. 26, 2022	Feb.25, 2024
Horn Antenna	SCHWARZBECK	BBHA 9170	1118	Jun. 26, 2022	Jun.25, 2024
Loop Antenna	SCHWARZBECK	FMZB 1519 B	1519B-059	Jun. 26, 2022	Jun.25, 2024
HF Amplifier	Tonscend	TAP9E6343	AP21C806117	Sep.01.2022	Aug. 31, 2023
HF Amplifier	Tonscend	TAP051845	AP21C806141	Sep.01.2022	Aug. 31, 2023
HF Amplifier	Tonscend	TAP0184050	AP21C806129	Sep.01.2022	Aug. 31, 2023
Antenna Conducted Emission					
Equipment	**Manufacturer**	**Model No.**	**Serial No.**	**Last Cal.**	**Cal. Due Date**
Spectrum Analyzer	Agilent	E4407B	MY45106456	Jun. 23, 2022	Jun. 22, 2023
Spectrum Analyzer	Rohde & Schwarz	FSV40-N	102197	Jun. 23, 2022	Jun. 22, 2023
MXA Signal Analyzer	KEYSIGT	N9020B	MY60110172	Sep. 01, 2022	Aug. 31, 2023
MXA Signal Analyzer	Agilent	N9020A	MY47380425	Sep. 01, 2022	Aug. 31, 2023
Vector Signal Generator	Agilent	N5182A	MY50141294	Sep. 01, 2022	Aug. 31, 2023
Analog Signal Generator	Agilent	N5181A	MY48180463	Sep. 01, 2022	Aug. 31, 2023
Vector Signal Generator	KEYSIGT	N5182B	MY59101429	Sep. 01, 2022	Aug. 31, 2023
Analog Signal Generator	KEYSIGHT	N5173B	MY61252685	Dec. 15, 2022	Dec. 14, 2023
RF Power Sensor	DARE!! Instruments	RadiPowerRPR3006W	17I00015SNO26	Sep. 01, 2022	Aug. 31, 2023
	DARE!! Instruments	RadiPowerRPR3006W	17I00015SNO29	Sep. 01, 2022	Aug. 31, 2023
	DARE!! Instruments	RadiPowerRPR3006W	17I00015SNO31	Sep. 01, 2022	Aug. 31, 2023
	DARE!! Instruments	RadiPowerRPR3006W	17I00015SNO33	Sep. 01, 2022	Aug. 31, 2023
RF Control Unit	Tonsced	JS0806-1	21C8060380	N/A	N/A
RF Control Unit	Tonsced	JS0806-2	21F8060439	Sep. 01, 2022	Aug. 31, 2023
Band Reject Filter Group	Tonsced	JS0806-F	21D8060414	Jun. 23, 2022	Jun. 22, 2023
Power Control Box	Tonsced	JS0806-4ADC	21C8060387	N/A	N/A
Wideband Radio Comunication Tester	Rohde & Schwarz	CMW500	144382	Sep. 01, 2022	Aug. 31, 2023
Universal Radio	Rohde&Schwarz	CMW500	168796	Jun. 23, 2022	Jun. 22, 2023

Communication Tester					
Temperature and Humidity Chamber	ZhengHang	ZH-QTH-1500	ZH2107264	Jun. 22, 2022	Jun. 21, 2023

5. Conducted Emission Test

5.1 Test Standard and Limit

5.1.1 Test Standard

FCC Part 15.207

5.1.2 Test Limit

Frequency	Maximum RF Line Voltage (dBμV)	
	Quasi-peak Level	Average Level
150kHz~500kHz	66 ~ 56 *	56 ~ 46 *
500kHz~5MHz	56	46
5MHz~30MHz	60	50

Notes:

(1) *Decreasing linearly with logarithm of the frequency.

(2) The lower limit shall apply at the transition frequencies.

(3) The limit decrease in line with the logarithm of the frequency in the range of 0.15 to 0.50MHz.

5.2 Test Setup

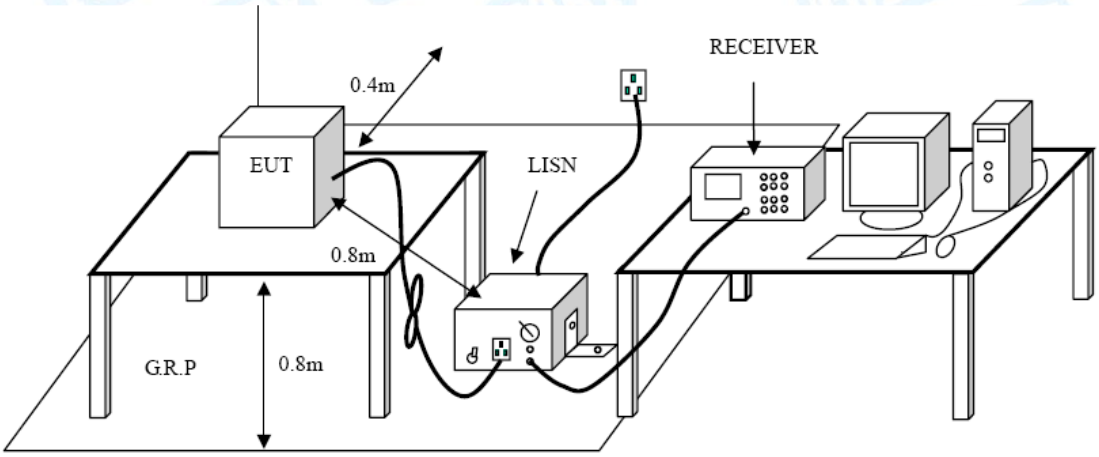

5.3 Test Procedure

●The EUT was placed 0.8 meters from the horizontal ground plane with EUT being connected to the power mains through a line impedance stabilization network (LISN). All other support equipments powered from additional LISN(s). The LISN provide 50 Ohm/ 50uH of coupling impedance for the measuring instrument.

●Interconnecting cables that hang closer than 40 cm to the ground plane shall be folded back and forth in the center forming a bundle 30 to 40 cm long.

●I/O cables that are not connected to a peripheral shall be bundled in the center. The end of the cable may be terminated, if required, using the correct terminating impedance. The overall length shall not exceed 1 m.

●LISN at least 80 cm from nearest part of EUT chassis.

●The bandwidth of EMI test receiver is set at 9 kHz, and the test frequency band is from 0.15MHz to 30MHz.

5.4 Deviation From Test Standard

No deviation

5.5 EUT Operating Mode

Please refer to the description of test mode.

5.6 Test Data

Please refer to the Attachment A inside test report.

6. Radiated and Conducted Unwanted Emissions

6.1 Test Standard and Limit

6.1.1 Test Standard

FCC Part 15.209 & FCC Part 15.247(d)

6.1.2 Test Limit

General field strength limits at frequencies Below 30MHz		
Frequency (MHz)	**Field Strength (microvolt/meter)****	**Measurement Distance (meters)**
0.009~0.490	2400/F(KHz)	300
0.490~1.705	24000/F(KHz)	30
1.705~30.0	30	30
Note: 1, The emission limits for the ranges 9-90 kHz and 110-490 kHz are based on measurements employing a linear average detector.		

General field strength limits at frequencies above 30 MHz		
Frequency (MHz)	**Field strength(μV/m at 3 m)**	**Measurement Distance (meters)**
30~88	100	3
88~216	150	3
216~960	200	3
Above 960	500	3

General field strength limits at frequencies Above 1000MHz		
Frequency (MHz)	**Distance of 3m (dBuV/m)**	
	Peak	**Average**
Above 1000	74	54
Note: (1) The tighter limit applies at the band edges. (2) Emission Level(dBuV/m)=20log Emission Level(uV/m)		

In any 100 kHz bandwidth outside the frequency band in which the spread spectrum or digitally modulated device is operating, the RF power that is produced shall be at least 20 dB below that in the 100 kHz bandwidth within the band that contains the highest level of the desired power, based on either an RF conducted or a radiated measurement, provided that the transmitter demonstrates compliance with the peak conducted power limits. If the

transmitter complies with the conducted power limits based on the use of root-mean-square averaging over a time interval, as permitted under section 5.4(d), the attenuation required shall be 30 dB instead of 20 dB. Attenuation below the general field strength limits specified in RSS-Gen is not required.

6.2 Test Setup

Radiated measurement

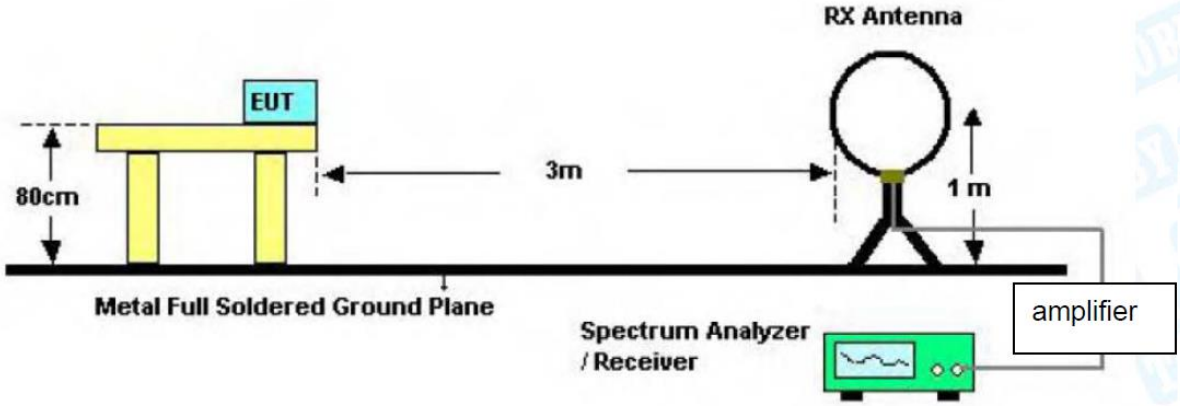

Below 30MHz Test Setup

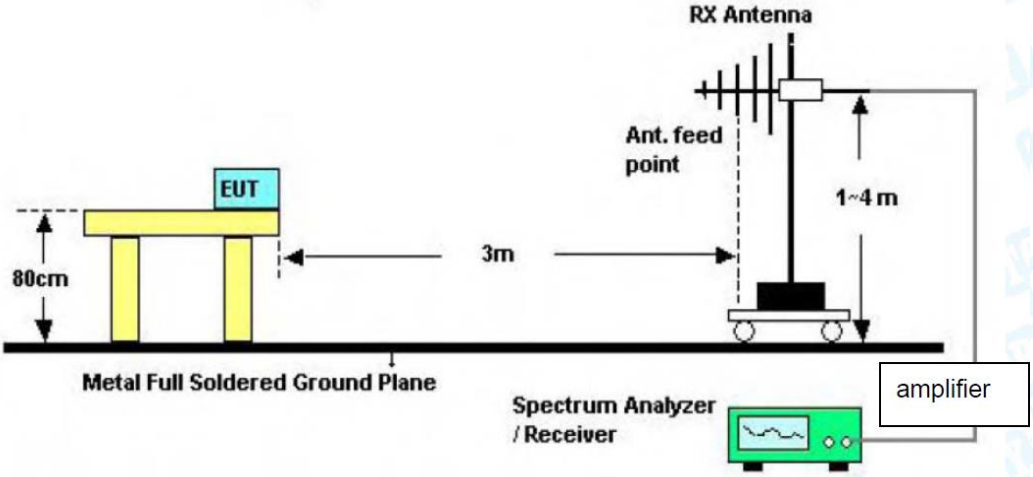

Below 1000MHz Test Setup

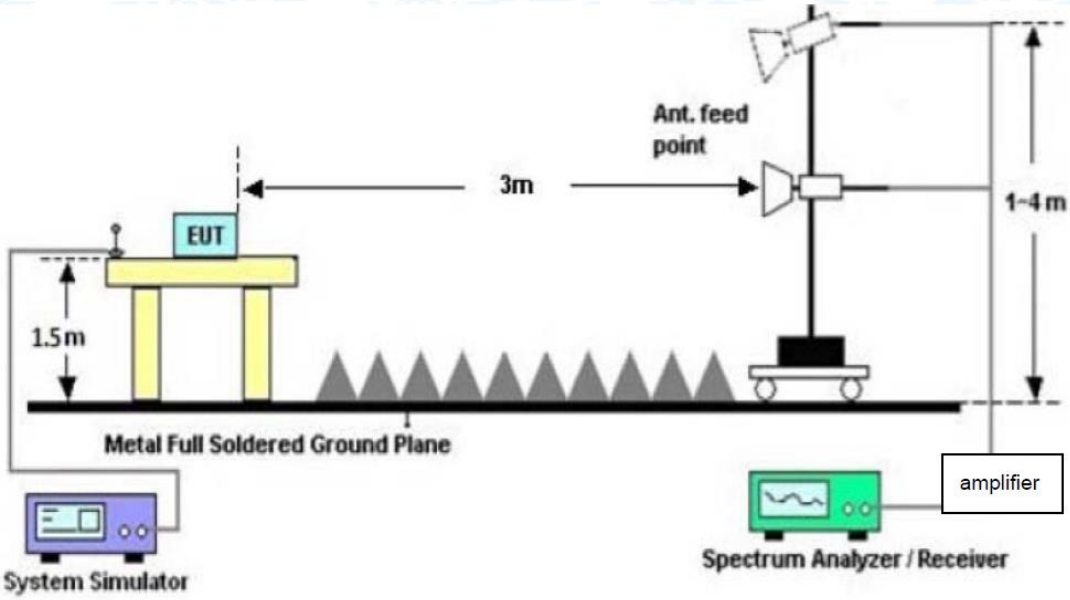

Above 1GHz Test Setup

Conducted measurement

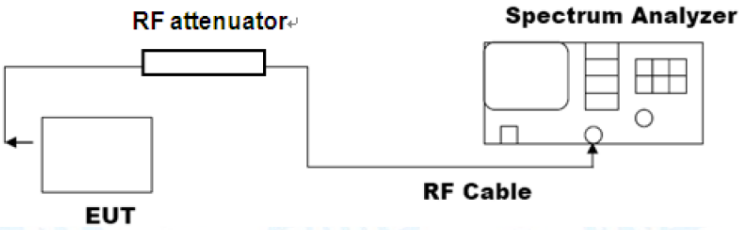

6.3 Test Procedure

---Radiated measurement

●The measuring distance of 3m shall be used for measurements at frequency up to 1GHz and above 1 GHz. The EUT was placed on a rotating 0.8m high above ground, the table was rotated 360 degrees to determine the position of the highest radiation.

● Measurements at frequency above 1GHz. The EUT was placed on a rotating 1.5m high above the ground. RF absorbers covered the ground plane with a minimum area of 3.0m by 3.0m between the EUT and measurement receiver antenna. The RF absorber shall not exceed 30cm in high above the conducting floor. The table was rotated 360 degrees to determine the position of the highest radiation.

● The Test antenna shall vary between 1m and 4m, Both Horizontal and Vertical antenna are set to make measurement.

●The initial step in collecting conducted emission data is a spectrum analyzer peak detector mode pre-scanning the measurement frequency range. Significant peaks are then marked and then Quasi Peak detector mode re-measured.

●If the Peak Mode measured value compliance with and lower than Quasi Peak Mode Limit Below 1 GHz, the EUT shall be deemed to meet QP Limits and then no additional QP Mode measurement performed. But the Peak Value and average value both need to comply with applicable limit above 1 GHz.

●Testing frequency range 30MHz-1GHz the measuring instrument use VBW=120 kHz with Quasi-peak detection. Testing frequency range 9KHz-150Hz the measuring instrument use VBW=200Hz with Quasi-peak detection. Testing frequency range 9KHz-30MHz the measuring instrument use VBW=9kHz with Quasi-peak detection.

●Testing frequency range above 1GHz the measuring instrument use RBW=1 MHz and VBW=3 MHz with Peak Detector for Peak Values, and use RBW=1 MHz and VBW=10 Hz with Peak Detector for Average Values.

●For the actual test configuration, please see the test setup photo.

--- Conducted measurement

●Reference level measurement

Establish a reference level by using the following procedure:

a) Set instrument center frequency to DTS channel center frequency.

b) Set the span to≥1.5 times the DTS bandwidth.

c) Set the RBW = 100 kHz.

d) Set the VBW≥[3*RBW].

e) Detector = peak.

f) Sweep time = auto couple.

g) Trace mode = max hold.

h) Allow trace to fully stabilize.

i) Use the peak marker function to determine the maximum PSD level.

Note that the channel found to contain the maximum PSD level can be used to establish the reference level.

●Emission level measurement

Establish an emission level by using the following procedure:

a) Set the center frequency and span to encompass frequency range to be measured.

b) Set the RBW = 100 kHz.

c) Set the VBW≥[3*RBW].

d) Detector = peak.

e) Sweep time = auto couple.

f) Trace mode = max hold.

g) Allow trace to fully stabilize.

h) Use the peak marker function to determine the maximum amplitude level.

Ensure that the amplitude of all unwanted emissions outside of the authorized frequency band (excluding restricted frequency bands) is attenuated by at least the minimum requirements specified in 11.11. Report the three highest emissions relative to the limit.

6.4 Deviation From Test Standard

No deviation

6.5 EUT Operating Mode

Please refer to the description of test mode.

6.6 Test Data

Radiated measurement please refer to the Attachment B inside test report.

Conducted measurement please refer to the external appendix report of 2.4G Wi-Fi.

7. Restricted Bands Requirement

7.1 Test Standard and Limit

7.1.1 Test Standard

FCC Part 15.205 & FCC Part 15.247(d)

7.1.2 Test Limit

Restricted Frequency Band (MHz)	Distance Meters(at 3m)	
	Peak (dBuV/m)	Average (dBuV/m)
2310 ~2390	74	54
2483.5 ~2500	74	54
	Peak (dBm)see 7.3 e)	Average (dBm) see 7.3 e)
2310 ~2390	-21.20	-41.20
2483.5 ~2500	-21.20	-41.20

Note: According the ANSI C63.10 11.12.2 antenna-port conducted measurements may also be used as an alternative to radiated measurements for determining compliance in the restricted frequency bands requirements. If conducted measurements are performed, then proper impedance matching must be ensured and an additional radiated test forcabinet/case emissions is required.

7.2 Test Setup

Radiated measurement

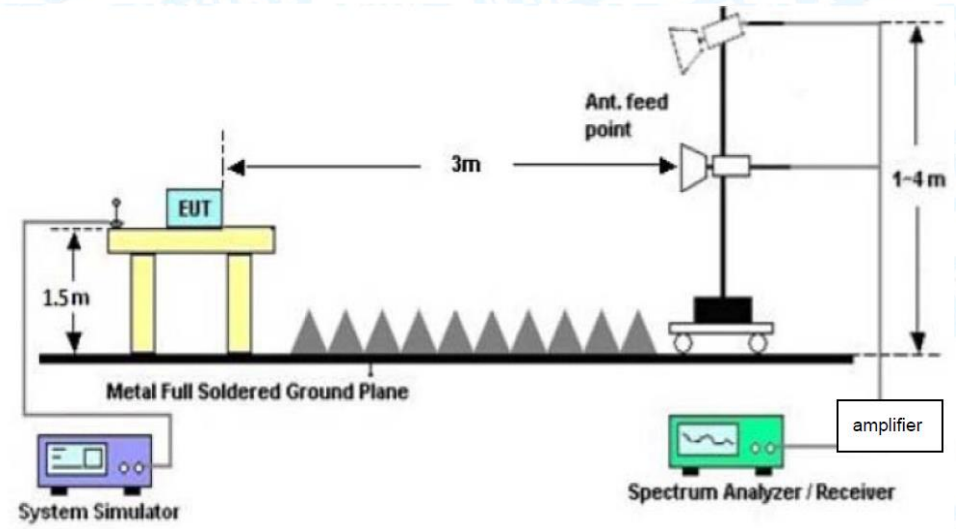

Conducted measurement

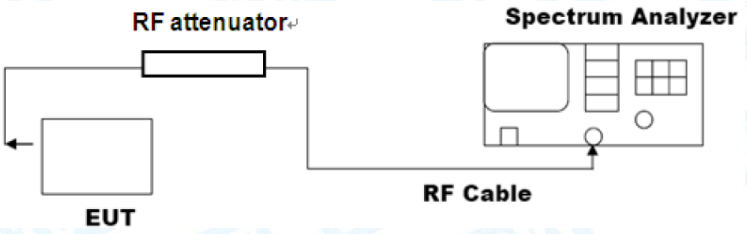

7.3 Test Procedure

---Radiated measurement

● Measurements at frequency above 1GHz. The EUT was placed on a rotating 1.5m high above the ground. RF absorbers covered the ground plane with a minimum area of 3.0m by 3.0m between the EUT and measurement receiver antenna. The RF absorber shall not exceed 30cm in high above the conducting floor. The table was rotated 360 degrees to determine the position of the highest radiation.

● The Test antenna shall vary between 1m and 4m, Both Horizontal and Vertical antenna are set to make measurement.

●The initial step in collecting conducted emission data is a spectrum analyzer peak detector mode pre-scanning the measurement frequency range. Significant peaks are then marked and then Quasi Peak detector mode re-measured.

●The Peak Value and average value both need to comply with applicable limit above 1 GHz.

●Testing frequency range above 1GHz the measuring instrument use RBW=1 MHz and VBW=3 MHz with Peak Detector for Peak Values, and use RBW=1 MHz and VBW=10 Hz with Peak Detector for Average Values.

●For the actual test configuration, please see the test setup photo.

--- Conducted measurement

a) Measure the conducted output power (in dBm) using the detector specified by the appropriate regulatory agency (see 11.12.2.3 through 11.12.2.5 for guidance regarding measurement procedures for determining quasi-peak, peak, and average conducted output power, respectively).

b) Add the maximum transmit antenna gain (in dBi) to the measured output power level to determine the EIRP (see 11.12.2.6 for guidance on determining the applicable antenna gain).

c) Add the appropriate maximum ground reflection factor to the EIRP (6 dB for frequencies ≤30 MHz; 4.7 dB for frequencies between 30 MHz and 1000 MHz, inclusive; and 0 dB for frequencies > 1000 MHz).

d) For MIMO devices, measure the power of each chain and sum the EIRP of all chains in linear terms (i.e., watts and mW).

e) Convert the resultant EIRP to an equivalent electric field strength using the following relationship:

$$E = \text{EIRP} - 20 \log d + 104.8$$

where

E is the electric field strength in dBuV/m

EIRP is the equivalent isotropically radiated power in dBm

d is the specified measurement distance in m

f) Compare the resultant electric field strength level with the applicable regulatory limit.

g) Perform the radiated spurious emission test.

7.4 Deviation From Test Standard

No deviation

7.5 EUT Operating Mode

Please refer to the description of test mode.

7.6 Test Data

Remark: The test uses antenna-port conducted measurements as an alternative to radiated measurements for determining compliance in the restricted frequency bands requirements.

Please refer to the external appendix report of 2.4G Wi-Fi.

8. Bandwidth Test

8.1 Test Standard and Limit

8.1.1 Test Standard

FCC Part 15.205 & FCC Part 15.247(d)

8.1.2 Test Limit

Test Item	Limit	Frequency Range(MHz)
-6dB bandwidth (DTS bandwidth)	>=500 KHz	2400~2483.5
99% occupied bandwidth	/	2400~2483.5

8.2 Test Setup

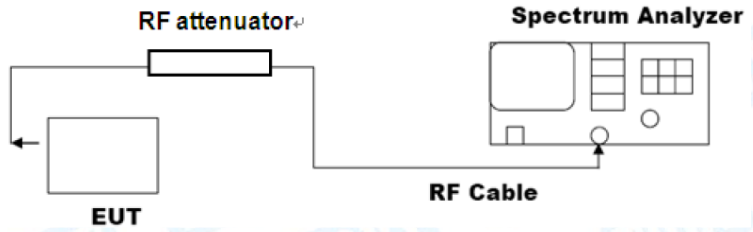

8.3 Test Procedure

---DTS bandwidth

●The steps for the first option are as follows:

a) Set RBW = 100 kHz.

b) Set the VBW≥[3*RBW].

c) Detector = peak.

d) Trace mode = max hold.

e) Sweep = auto couple.

f) Allow the trace to stabilize.

g) Measure the maximum width of the emission that is constrained by the frequencies associated with the two outermost amplitude points (upper and lower frequencies) that are attenuated by 6 dB relative to the maximum level measured in the fundamental emission.

---occupied bandwidth

●The occupied bandwidth is the frequency bandwidth such that, below its lower and above its upper frequency limits, the mean powers are each equal to 0.5% of the total mean power of the given emission. The following procedure shall be used for measuring 99% power bandwidth:

a) The instrument center frequency is set to the nominal EUT channel center frequency. The frequency span for the spectrum analyzer shall be between 1.5 times and 5.0 times the OBW.

b) The nominal IF filter bandwidth (3 dB RBW) shall be in the range of 1% to 5% of the OBW, and VBW shall be approximately three times the RBW, unless otherwise specified by the applicable requirement.

c) Set the reference level of the instrument as required, keeping the signal from exceeding the maximum input mixer level for linear operation. In general, the peak of the spectral envelope shall be more than [10 log (OBW/RBW)] below the reference level. Specific guidance is given in 4.1.5.2.

d) Step a) through step c) might require iteration to adjust within the specified range.

e) Video averaging is not permitted. Where practical, a sample detection and single sweep mode shall be used. Otherwise, peak detection and max hold mode (until the trace stabilizes) shall be used.

f) Use the 99% power bandwidth function of the instrument (if available) and report the measured bandwidth.

g) If the instrument does not have a 99% power bandwidth function, then the trace data points are recovered and directly summed in linear power terms. The recovered amplitude data points, beginning at the lowest frequency, are placed in a running sum until 0.5% of the total is reached; that frequency is recorded as the lower frequency. The process is repeated until 99.5% of the total is reached; that frequency is recorded as the upper frequency. The 99% power bandwidth is the difference between these two frequencies.

h) The occupied bandwidth shall be reported by providing plot(s) of the measuring instrument display; the plot axes and the scale units per division shall be clearly labeled. Tabular data may be reported in addition to the plot(s).

8.4 Deviation From Test Standard

No deviation

8.5 EUT Operating Mode

Please refer to the description of test mode.

8.6 Test Data

Please refer to the external appendix report of 2.4G Wi-Fi.

9. Peak Output Power

9.1 Test Standard and Limit

9.1.1 Test Standard

FCC Part 15.247(b)(3)

9.1.2 Test Limit

Test Item	Limit	Frequency Range(MHz)
Peak Output Power	not exceed 1 W or 30dBm	2400~2483.5

9.2 Test Setup

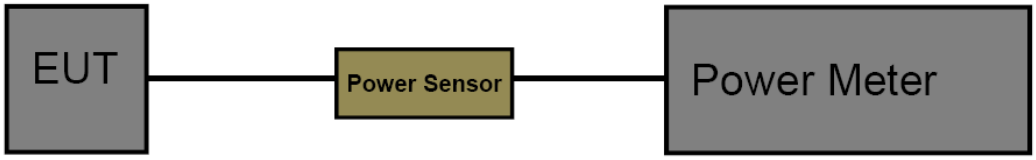

9.3 Test Procedure

●The EUT was connected to RF power meter via a broadband power sensor as show the block above. The power sensor video bandwidth is greater than or equal to the DTS bandwidth of the equipment.

9.4 Deviation From Test Standard

No deviation

9.5 EUT Operating Mode

Please refer to the description of test mode.

9.6 Test Data

Please refer to the external appendix report of 2.4G Wi-Fi.

10. Power Spectral Density

10.1 Test Standard and Limit

10.1.1 Test Standard

FCC Part 15.247(e)

10.1.2 Test Limit

Test Item	Limit	Frequency Range(MHz)
Power Spectral Density	8dBm(in any 3 kHz)	2400~2483.5

10.2 Test Setup

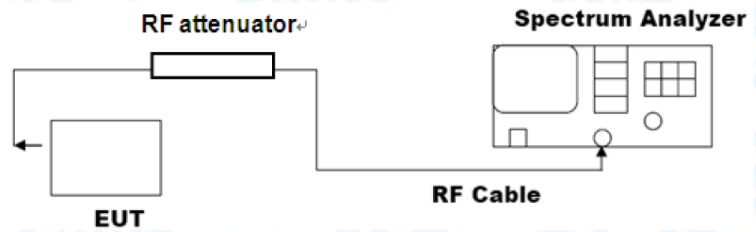

10.3 Test Procedure

●The following procedure shall be used if maximum peak conducted output power was used to determine compliance, and it is optional if the maximum conducted (average) output power was used to determine compliance:

a) Set analyzer center frequency to DTS channel center frequency.

b) Set the span to 1.5 times the DTS bandwidth.

c) Set the RBW to 3 kHz≤RBW≤100 kHz.

d) Set the VBW ≥[3*RBW].

e) Detector = peak.

f) Sweep time = auto couple.

g) Trace mode = max hold.

h) Allow trace to fully stabilize.

i) Use the peak marker function to determine the maximum amplitude level within the RBW.

j) If measured value exceeds requirement, then reduce RBW (but no less than 3 kHz) and repeat.

10.4 Deviation From Test Standard

No deviation

10.5 Antenna Connected Construction

Please refer to the description of test mode.

10.6 Test Data

Please refer to the external appendix report of 2.4G Wi-Fi.

11. Antenna Requirement

11.1 Test Standard and Limit

11.1.1 Test Standard

FCC Part 15.203

11.1.2 Requirement

An intentional radiator shall be designed to ensure that no antenna other than that furnished by the responsible party shall be used with the device. The use of a permanently attached antenna or of an antenna that uses a unique coupling to the intentional radiator shall be considered sufficient to comply with the provisions of this Section. The manufacturer may design the unit so that a broken antenna can be replaced by the user, but the use of a standard antenna jack or electrical connector is prohibited.

11.2 Deviation From Test Standard

No deviation

11.3 Antenna Connected Construction

The gains of the antenna used for transmitting is 1.52dBi, and the antenna de-signed with permanent attachment and no consideration of replacement. Please see the EUT photo for details.

11.4 Test Data

The EUT antenna is a FPC Antenna. It complies with the standard requirement.

Antenna Type
☒Permanent attached antenna
☐Unique connector antenna
☐Professional installation antenna

Attachment A-- Conducted Emission Test Data

Temperature:	23.8℃	**Relative Humidity:**	47.1%
Test Voltage:	AC 120V/60Hz		
Terminal:	Line		
Test Mode:	Mode 1		
Remark:	Only worse case is reported.		

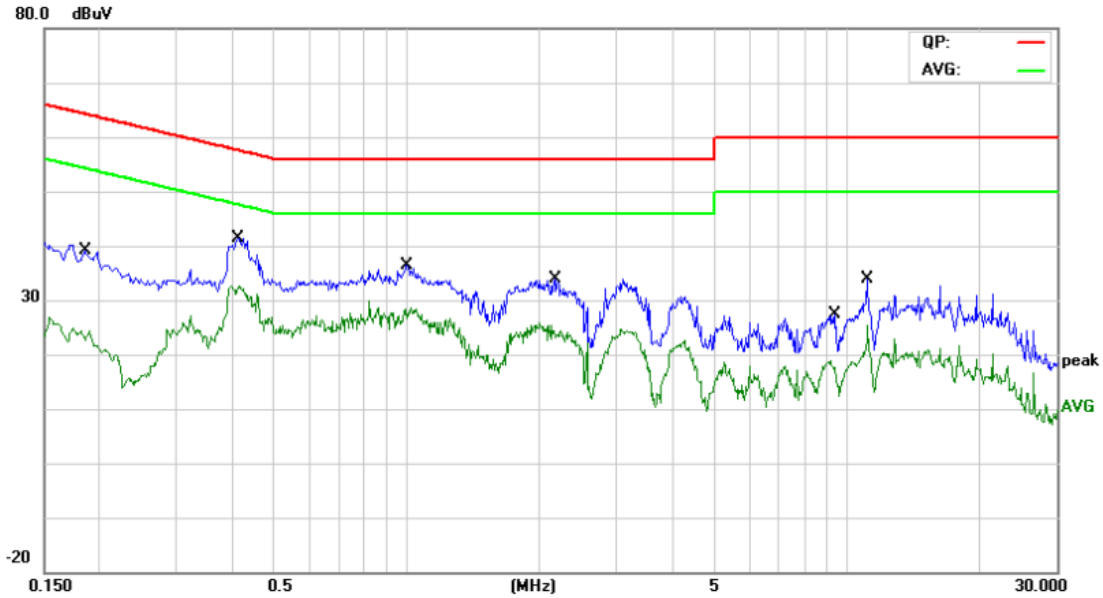

No.	Mk.	Freq.	Reading Level	Correct Factor	Measure-ment	Limit	Over	
		MHz	dBuV	dB	dBuV	dBuV	dB	Detector
1		0.1860	23.46	11.08	34.54	64.21	-29.67	QP
2		0.1860	12.45	11.08	23.53	54.21	-30.68	AVG
3		0.4140	29.79	10.90	40.69	57.57	-16.88	QP
4	*	0.4140	22.75	10.90	33.65	47.57	-13.92	AVG
5		1.0020	22.70	10.70	33.40	56.00	-22.60	QP
6		1.0020	17.38	10.70	28.08	46.00	-17.92	AVG
7		2.1780	19.79	10.47	30.26	56.00	-25.74	QP
8		2.1780	14.13	10.47	24.60	46.00	-21.40	AVG
9		9.4260	12.07	10.15	22.22	60.00	-37.78	QP
10		9.4260	6.81	10.15	16.96	50.00	-33.04	AVG
11		11.1340	18.07	10.22	28.29	60.00	-31.71	QP
12		11.1340	12.04	10.22	22.26	50.00	-27.74	AVG

Remark:
1. Corr. Factor (dB) = LISN Factor (dB) + Cable Loss (dB)
2. Margin (dB) =QuasiPeak/Average (dBuV)-Limit (dBuV)

Temperature:	23.8℃	**Relative Humidity:**	47.1%
Test Voltage:	AC 120V/60Hz		
Terminal:	Neutral		
Test Mode:	Mode 1		
Remark:	Only worse case is reported.		

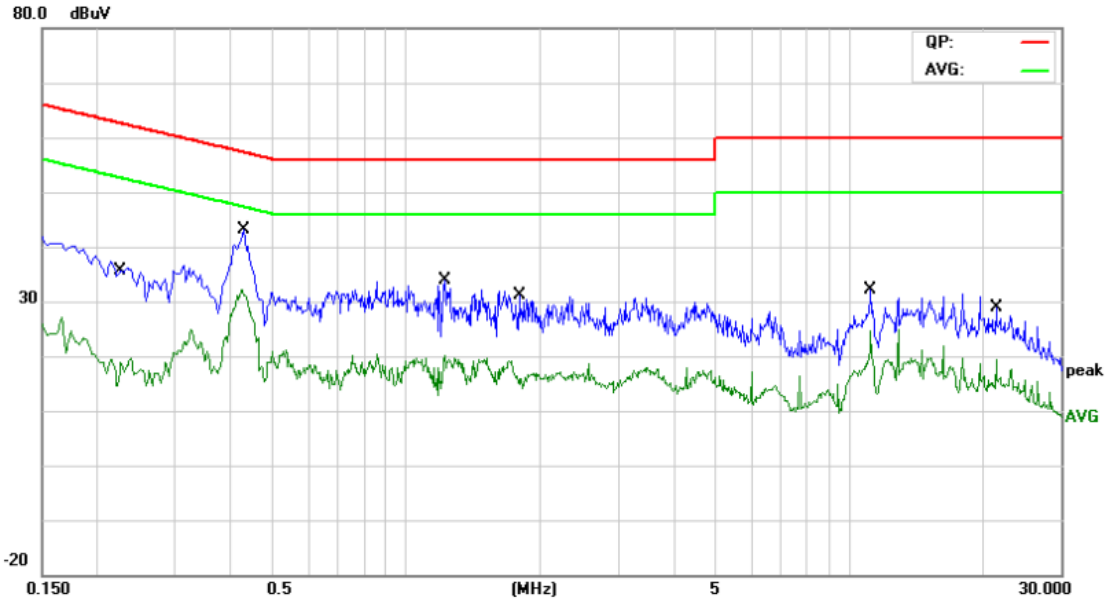

No.	Mk.	Freq.	Reading Level	Correct Factor	Measure-ment	Limit	Over	
		MHz	dBuV	dB	dBuV	dBuV	dB	Detector
1		0.2260	20.84	11.08	31.92	62.59	-30.67	QP
2		0.2260	5.53	11.08	16.61	52.59	-35.98	AVG
3		0.4300	26.93	10.90	37.83	57.25	-19.42	QP
4	*	0.4300	20.73	10.90	31.63	47.25	-15.62	AVG
5		1.2220	15.20	10.66	25.86	56.00	-30.14	QP
6		1.2220	8.05	10.66	18.71	46.00	-27.29	AVG
7		1.7980	11.02	10.57	21.59	56.00	-34.41	QP
8		1.7980	4.26	10.57	14.83	46.00	-31.17	AVG
9		11.1420	19.13	10.22	29.35	60.00	-30.65	QP
10		11.1420	13.28	10.22	23.50	50.00	-26.50	AVG
11		21.4220	13.42	10.66	24.08	60.00	-35.92	QP
12		21.4220	5.17	10.66	15.83	50.00	-34.17	AVG

Remark:
1. Corr. Factor (dB) = LISN Factor (dB) + Cable Loss (dB)
2. Margin (dB) =QuasiPeak/Average (dBuV)-Limit (dBuV)

Attachment B--Unwanted Emissions Data

---Radiated Unwanted Emissions

9 KHz~30 MHz

From 9 KHz to 30 MHz: Conclusion: PASS

Note: The amplitude of spurious emissions which are attenuated by more than 20dB Below the permissible value has no need to be reported.

30MHz~1GHz

Temperature:	24.3℃	**Relative Humidity:**	45%
Test Voltage:	AC 120V/60Hz		
Ant. Pol.	Horizontal		
Test Mode:	Mode 2 TX Mode b Mode Channel 01		
Remark:	Only worse case is reported.		

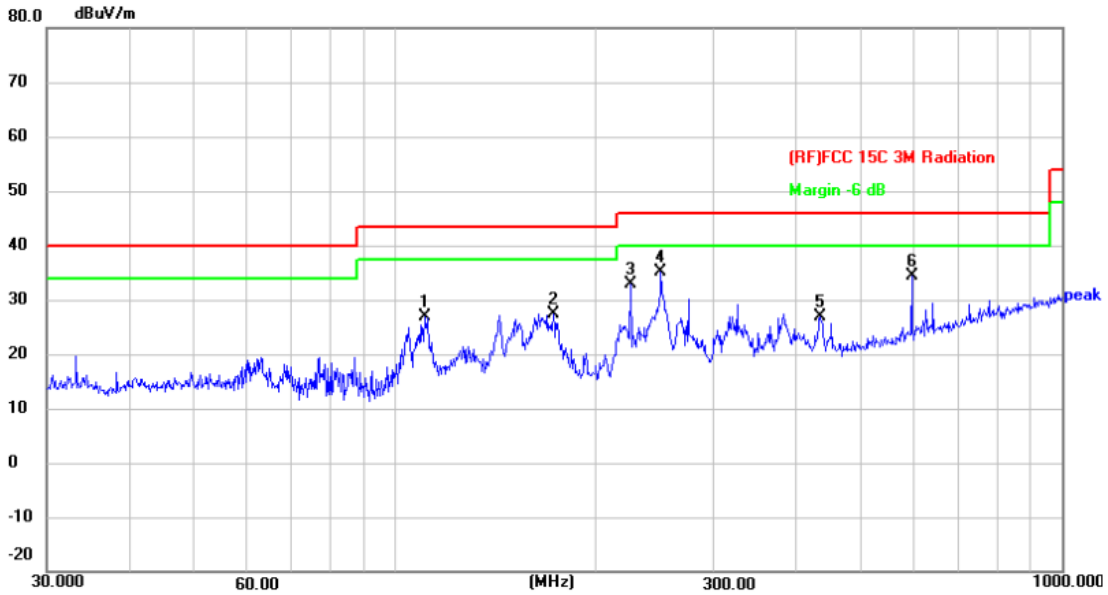

No.	Frequency (MHz)	Reading (dBuV)	Factor (dB/m)	Level (dBuV/m)	Limit (dBuV/m)	Margin (dB)	Detector
1	110.5687	51.67	-24.68	26.99	43.50	-16.51	peak
2	172.5988	50.65	-23.22	27.43	43.50	-16.07	peak
3	225.3080	56.51	-23.67	32.84	46.00	-13.16	peak
4 *	250.3012	57.84	-22.68	35.16	46.00	-10.84	peak
5	434.0651	43.76	-17.00	26.76	46.00	-19.24	peak
6	595.1329	47.42	-12.99	34.43	46.00	-11.57	peak

*:Maximum data x:Over limit !:over margin

Remark:

1. Corr. = Antenna Factor (dB/m) + Cable Loss (dB)

2. QuasiPeak (dBμV/m)= Corr. (dB/m)+ Read Level (dBμV)

3. Margin (dB) = QuasiPeak (dBμV/m)-Limit QPK(dBμV/m)

Temperature:	24.3℃	**Relative Humidity:**	45%
Test Voltage:	AC 120V/60Hz		
Ant. Pol.	Vertical		
Test Mode:	Mode 2 TX Mode b Mode Channel 01		
Remark:	Only worse case is reported.		

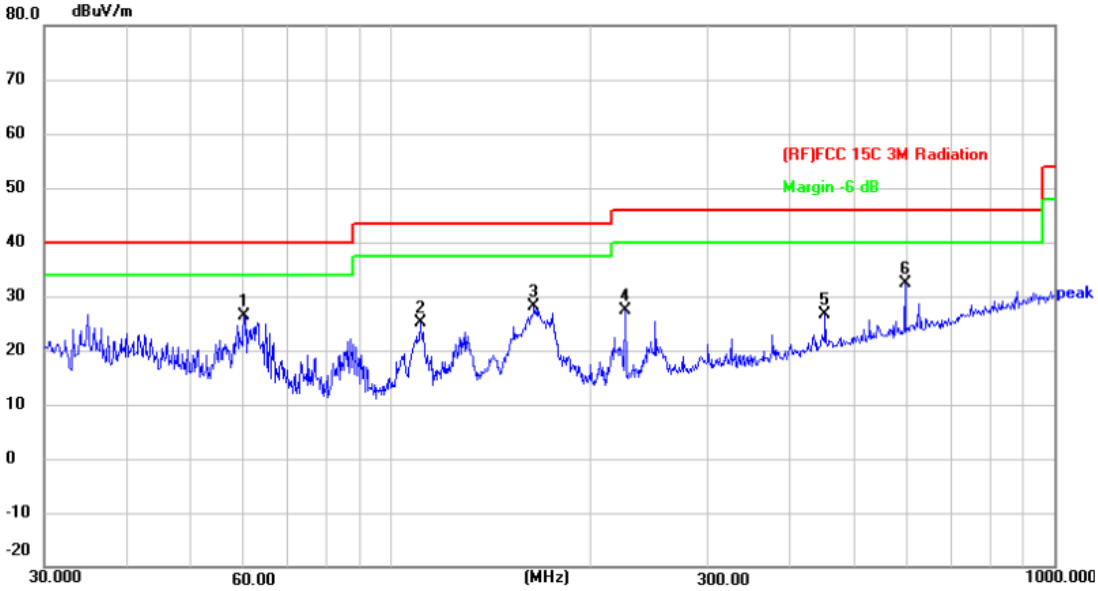

No.	Frequency (MHz)	Reading (dBuV)	Factor (dB/m)	Level (dBuV/m)	Limit (dBuV/m)	Margin (dB)	Detector
1 *	60.0691	50.14	-23.66	26.48	40.00	-13.52	peak
2	110.5687	49.89	-24.68	25.21	43.50	-18.29	peak
3	164.3301	50.69	-22.51	28.18	43.50	-15.32	peak
4	225.3080	51.15	-23.67	27.48	46.00	-18.52	peak
5	451.1350	43.23	-16.59	26.64	46.00	-19.36	peak
6	595.1329	45.28	-12.99	32.29	46.00	-13.71	peak

*:Maximum data x:Over limit !:over margin

Remark:
1. Corr. = Antenna Factor (dB/m) + Cable Loss (dB)
2. QuasiPeak (dBµV/m)= Corr. (dB/m)+ Read Level (dBµV)
3. Margin (dB) = QuasiPeak (dBµV/m)-Limit QPK(dBµV/m)

Temperature:	24.3℃	**Relative Humidity:**	45%
Test Voltage:	AC 120V/60Hz		
Ant. Pol.	Horizontal		
Test Mode:	Mode 3 TX Mode b Mode Channel 01		
Remark:	Only worse case is reported.		

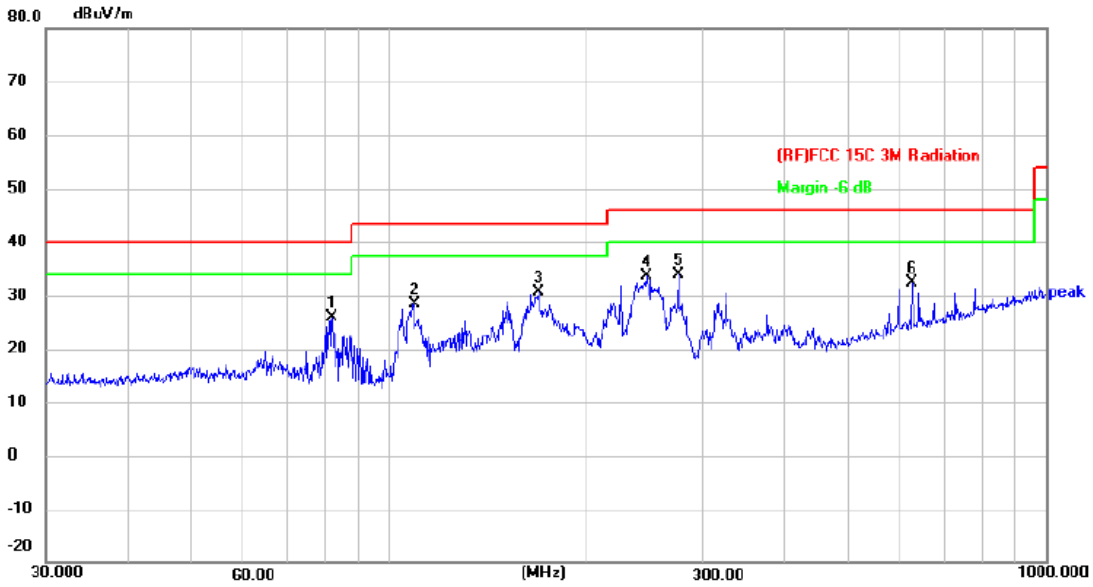

No.	Frequency (MHz)	Reading (dBuV)	Factor (dB/m)	Level (dBuV/m)	Limit (dBuV/m)	Margin (dB)	Detector
1	81.7833	52.78	-26.90	25.88	40.00	-14.12	peak
2	109.0286	53.23	-24.83	28.40	43.50	-15.10	peak
3	168.4138	53.47	-22.85	30.62	43.50	-12.88	peak
4	245.9509	56.41	-22.78	33.63	46.00	-12.37	peak
5 *	275.1570	55.53	-21.65	33.88	46.00	-12.12	peak
6	625.0780	44.70	-12.41	32.29	46.00	-13.71	peak

*:Maximum data x:Over limit !:over margin

Remark:
1. Corr. = Antenna Factor (dB/m) + Cable Loss (dB)
2. QuasiPeak (dBμV/m)= Corr. (dB/m)+ Read Level (dBμV)
3. Margin (dB) = QuasiPeak (dBμV/m)-Limit QPK(dBμV/m)

Temperature:	24.3℃	**Relative Humidity:**	45%
Test Voltage:	AC 120V/60Hz		
Ant. Pol.	Vertical		
Test Mode:	Mode 3 TX Mode b Mode Channel 01		
Remark:	Only worse case is reported.		

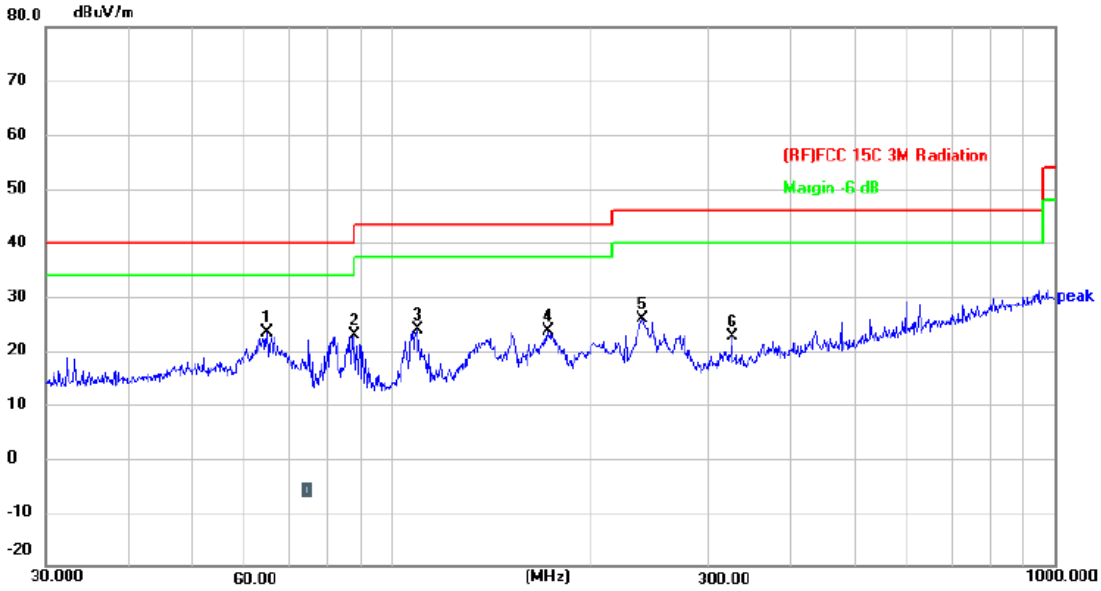

No.	Frequency (MHz)	Reading (dBuV)	Factor (dB/m)	Level (dBuV/m)	Limit (dBuV/m)	Margin (dB)	Detector
1 *	64.6594	47.38	-24.01	23.37	40.00	-16.63	peak
2	87.7248	49.68	-26.75	22.93	40.00	-17.07	peak
3	109.0286	48.66	-24.83	23.83	43.50	-19.67	peak
4	171.9946	46.73	-23.17	23.56	43.50	-19.94	peak
5	238.3102	48.83	-23.00	25.83	46.00	-20.17	peak
6	325.5958	42.88	-20.23	22.65	46.00	-23.35	peak

*:Maximum data x:Over limit !:over margin

Remark:
1. Corr. = Antenna Factor (dB/m) + Cable Loss (dB)
2. QuasiPeak (dBµV/m)= Corr. (dB/m)+ Read Level (dBµV)
3. Margin (dB) = QuasiPeak (dBµV/m)-Limit QPK(dBµV/m)

Above 1GHz

Temperature:	22.4℃	**Relative Humidity:**	42%
Test Voltage:	AC 120V/60Hz		
Ant. Pol.	Horizontal		
Test Mode:	TX B Mode 2412MHz		

No.	Frequency (MHz)	Reading (dBuV)	Factor (dB/m)	Level (dBuV/m)	Limit (dBuV/m)	Margin (dB)	Detector
1	10894.000	44.49	-1.80	42.69	74.00	-31.31	peak
2 *	14285.500	43.30	0.30	43.60	74.00	-30.40	peak

Remark:
1. Corr. = Antenna Factor (dB/m) + Cable Loss (dB)
2. Peak/AVG (dBμV/m)= Corr. (dB/m)+ Read Level (dBμV)
3. Margin (dB) = Peak/AVG (dBμV/m)-Limit PK/AVG(dBμV/m)
4. The tests evaluated1-26.5GHz,The testing has been conformed to the 10th harmonic of the highest fundamental frequency.
5. No report for the emission which more than 20dB below the prescribed limit.
6. The peak value＜average limit, So only show the peak value.

Temperature:	22.4℃	**Relative Humidity:**	42%
Test Voltage:	AC 120V/60Hz		
Ant. Pol.	Vertical		
Test Mode:	TX B Mode 2412MHz		

No.	Frequency (MHz)	Reading (dBuV)	Factor (dB/m)	Level (dBuV/m)	Limit (dBuV/m)	Margin (dB)	Detector
1	12118.000	43.15	-0.66	42.49	74.00	-31.51	peak
2 *	13546.000	43.78	0.02	43.80	74.00	-30.20	peak

Remark:
1. Corr. = Antenna Factor (dB/m) + Cable Loss (dB)
2. Peak/AVG (dBμV/m)= Corr. (dB/m)+ Read Level (dBμV)
3. Margin (dB) = Peak/AVG (dBμV/m)-Limit PK/AVG(dBμV/m)
4. The tests evaluated1-26.5GHz,The testing has been conformed to the 10th harmonic of the highest fundamental frequency.
5. No report for the emission which more than 20dB below the prescribed limit.
6. The peak value＜average limit, So only show the peak value.

Temperature:	22.4℃	**Relative Humidity:**	42%
Test Voltage:	AC 120V/60Hz		
Ant. Pol.	Horizontal		
Test Mode:	TX B Mode 2437MHz		

No.	Frequency (MHz)	Reading (dBuV)	Factor (dB/m)	Level (dBuV/m)	Limit (dBuV/m)	Margin (dB)	Detector
1	10766.500	45.10	-2.50	42.60	74.00	-31.40	peak
2 *	13520.500	42.97	0.07	43.04	74.00	-30.96	peak

Remark:
1. Corr. = Antenna Factor (dB/m) + Cable Loss (dB)
2. Peak/AVG (dBμV/m)= Corr. (dB/m)+ Read Level (dBμV)
3. Margin (dB) = Peak/AVG (dBμV/m)-Limit PK/AVG(dBμV/m)
4. The tests evaluated1-26.5GHz,The testing has been conformed to the 10th harmonic of the highest fundamental frequency.
5. No report for the emission which more than 20dB below the prescribed limit.
6. The peak value＜average limit, So only show the peak value.

Temperature:	22.4℃	**Relative Humidity:**	42%
Test Voltage:	AC 120V/60Hz		
Ant. Pol.	Vertical		
Test Mode:	TX B Mode 2437MHz		

No.	Frequency (MHz)	Reading (dBuV)	Factor (dB/m)	Level (dBuV/m)	Limit (dBuV/m)	Margin (dB)	Detector
1	10945.000	44.22	-1.80	42.42	74.00	-31.58	peak
2 *	14413.000	41.92	0.94	42.86	74.00	-31.14	peak

Remark:
1. Corr. = Antenna Factor (dB/m) + Cable Loss (dB)
2. Peak/AVG (dBμV/m)= Corr. (dB/m)+ Read Level (dBμV)
3. Margin (dB) = Peak/AVG (dBμV/m)-Limit PK/AVG(dBμV/m)
4. The tests evaluated1-26.5GHz,The testing has been conformed to the 10th harmonic of the highest fundamental frequency.
5. No report for the emission which more than 20dB below the prescribed limit.
6. The peak value＜average limit, So only show the peak value.

Temperature:	22.4℃	**Relative Humidity:**	42%
Test Voltage:	AC 120V/60Hz		
Ant. Pol.	Horizontal		
Test Mode:	TX B Mode 2462MHz		

No.	Frequency (MHz)	Reading (dBuV)	Factor (dB/m)	Level (dBuV/m)	Limit (dBuV/m)	Margin (dB)	Detector
1 *	10868.500	44.80	-1.93	42.87	74.00	-31.13	peak
2	14285.500	42.34	0.30	42.64	74.00	-31.36	peak

Remark:
1. Corr. = Antenna Factor (dB/m) + Cable Loss (dB)
2. Peak/AVG (dBμV/m)= Corr. (dB/m)+ Read Level (dBμV)
3. Margin (dB) = Peak/AVG (dBμV/m)-Limit PK/AVG(dBμV/m)
4. The tests evaluated1-26.5GHz,The testing has been conformed to the 10th harmonic of the highest fundamental frequency.
5. No report for the emission which more than 20dB below the prescribed limit.
6. The peak value＜average limit, So only show the peak value.

Temperature:	22.4℃	**Relative Humidity:**	42%
Test Voltage:	AC 120V/60Hz		
Ant. Pol.	Vertical		
Test Mode:	TX B Mode 2462MHz		

No.	Frequency (MHz)	Reading (dBuV)	Factor (dB/m)	Level (dBuV/m)	Limit (dBuV/m)	Margin (dB)	Detector
1 *	10894.000	45.05	-1.80	43.25	74.00	-30.75	peak
2	13520.500	43.17	0.07	43.24	74.00	-30.76	peak

Remark:
1. Corr. = Antenna Factor (dB/m) + Cable Loss (dB)
2. Peak/AVG (dBμV/m)= Corr. (dB/m)+ Read Level (dBμV)
3. Margin (dB) = Peak/AVG (dBμV/m)-Limit PK/AVG(dBμV/m)
4. The tests evaluated1-26.5GHz,The testing has been conformed to the 10th harmonic of the highest fundamental frequency.
5. No report for the emission which more than 20dB below the prescribed limit.
6. The peak value＜average limit, So only show the peak value.

Temperature:	22.4℃	**Relative Humidity:**	42%
Test Voltage:	AC 120V/60Hz		
Ant. Pol.	Horizontal		
Test Mode:	TX G Mode 2412MHz		

No.	Frequency (MHz)	Reading (dBuV)	Factor (dB/m)	Level (dBuV/m)	Limit (dBuV/m)	Margin (dB)	Detector
1	11072.500	44.41	-2.13	42.28	74.00	-31.72	peak
2 *	13265.500	44.34	-0.20	44.14	74.00	-29.86	peak

Remark:
1. Corr. = Antenna Factor (dB/m) + Cable Loss (dB)
2. Peak/AVG (dBμV/m)= Corr. (dB/m)+ Read Level (dBμV)
3. Margin (dB) = Peak/AVG (dBμV/m)-Limit PK/AVG(dBμV/m)
4. The tests evaluated1-26.5GHz,The testing has been conformed to the 10th harmonic of the highest fundamental frequency.
5. No report for the emission which more than 20dB below the prescribed limit.
6. The peak value＜average limit, So only show the peak value.

Temperature:	22.4℃	**Relative Humidity:**	42%
Test Voltage:	AC 120V/60Hz		
Ant. Pol.	Vertical		
Test Mode:	TX G Mode 2412MHz		

No.	Frequency (MHz)	Reading (dBuV)	Factor (dB/m)	Level (dBuV/m)	Limit (dBuV/m)	Margin (dB)	Detector
1	10919.500	44.23	-1.79	42.44	74.00	-31.56	peak
2 *	14311.000	43.55	0.37	43.92	74.00	-30.08	peak

Remark:
1. Corr. = Antenna Factor (dB/m) + Cable Loss (dB)
2. Peak/AVG (dBμV/m)= Corr. (dB/m)+ Read Level (dBμV)
3. Margin (dB) = Peak/AVG (dBμV/m)-Limit PK/AVG(dBμV/m)
4. The tests evaluated1-26.5GHz,The testing has been conformed to the 10th harmonic of the highest fundamental frequency.
5. No report for the emission which more than 20dB below the prescribed limit.
6. The peak value＜average limit, So only show the peak value.

Temperature:	22.4℃	**Relative Humidity:**	42%
Test Voltage:	AC 120V/60Hz		
Ant. Pol.	Horizontal		
Test Mode:	TX G Mode 2437MHz		

No.	Frequency (MHz)	Reading (dBuV)	Factor (dB/m)	Level (dBuV/m)	Limit (dBuV/m)	Margin (dB)	Detector
1 *	10894.000	45.16	-1.80	43.36	74.00	-30.64	peak
2	13673.500	42.48	0.20	42.68	74.00	-31.32	peak

Remark:
1. Corr. = Antenna Factor (dB/m) + Cable Loss (dB)
2. Peak/AVG (dBμV/m)= Corr. (dB/m)+ Read Level (dBμV)
3. Margin (dB) = Peak/AVG (dBμV/m)-Limit PK/AVG(dBμV/m)
4. The tests evaluated1-26.5GHz,The testing has been conformed to the 10th harmonic of the highest fundamental frequency.
5. No report for the emission which more than 20dB below the prescribed limit.
6. The peak value＜average limit, So only show the peak value.

Temperature:	22.4℃	**Relative Humidity:**	42%
Test Voltage:	AC 120V/60Hz		
Ant. Pol.	Vertical		
Test Mode:	TX G Mode 2437MHz		

No.	Frequency (MHz)	Reading (dBuV)	Factor (dB/m)	Level (dBuV/m)	Limit (dBuV/m)	Margin (dB)	Detector
1	10894.000	44.80	-1.80	43.00	74.00	-31.00	peak
2 *	13928.500	43.24	0.85	44.09	74.00	-29.91	peak

Remark:
1. Corr. = Antenna Factor (dB/m) + Cable Loss (dB)
2. Peak/AVG (dBμV/m)= Corr. (dB/m)+ Read Level (dBμV)
3. Margin (dB) = Peak/AVG (dBμV/m)-Limit PK/AVG(dBμV/m)
4. The tests evaluated1-26.5GHz,The testing has been conformed to the 10th harmonic of the highest fundamental frequency.
5. No report for the emission which more than 20dB below the prescribed limit.
6. The peak value＜average limit, So only show the peak value.

Temperature:	22.4℃	**Relative Humidity:**	42%
Test Voltage:	AC 120V/60Hz		
Ant. Pol.	Horizontal		
Test Mode:	TX G Mode 2462MHz		

No.	Frequency (MHz)	Reading (dBuV)	Factor (dB/m)	Level (dBuV/m)	Limit (dBuV/m)	Margin (dB)	Detector
1 *	10894.000	46.53	-1.80	44.73	74.00	-29.27	peak
2	13444.000	43.04	0.15	43.19	74.00	-30.81	peak

Remark:
1. Corr. = Antenna Factor (dB/m) + Cable Loss (dB)
2. Peak/AVG (dBμV/m)= Corr. (dB/m)+ Read Level (dBμV)
3. Margin (dB) = Peak/AVG (dBμV/m)-Limit PK/AVG(dBμV/m)
4. The tests evaluated1-26.5GHz,The testing has been conformed to the 10th harmonic of the highest fundamental frequency.
5. No report for the emission which more than 20dB below the prescribed limit.
6. The peak value＜average limit, So only show the peak value.

Temperature:	22.4℃	**Relative Humidity:**	42%
Test Voltage:	AC 120V/60Hz		
Ant. Pol.	Vertical		
Test Mode:	TX G Mode 2462MHz		

No.	Frequency (MHz)	Reading (dBuV)	Factor (dB/m)	Level (dBuV/m)	Limit (dBuV/m)	Margin (dB)	Detector
1	11200.000	44.69	-2.09	42.60	74.00	-31.40	peak
2 *	13240.000	43.92	-0.20	43.72	74.00	-30.28	peak

Remark:
1. Corr. = Antenna Factor (dB/m) + Cable Loss (dB)
2. Peak/AVG (dBμV/m)= Corr. (dB/m)+ Read Level (dBμV)
3. Margin (dB) = Peak/AVG (dBμV/m)-Limit PK/AVG(dBμV/m)
4. The tests evaluated1-26.5GHz,The testing has been conformed to the 10th harmonic of the highest fundamental frequency.
5. No report for the emission which more than 20dB below the prescribed limit.
6. The peak value＜average limit, So only show the peak value.

Temperature:	22.4℃	**Relative Humidity:**	42%
Test Voltage:	AC 120V/60Hz		
Ant. Pol.	Horizontal		
Test Mode:	TX n(HT20) Mode 2412MHz		

No.	Frequency (MHz)	Reading (dBuV)	Factor (dB/m)	Level (dBuV/m)	Limit (dBuV/m)	Margin (dB)	Detector
1	10919.500	45.28	-1.79	43.49	74.00	-30.51	peak
2 *	13495.000	44.09	0.11	44.20	74.00	-29.80	peak

Remark:
1. Corr. = Antenna Factor (dB/m) + Cable Loss (dB)
2. Peak/AVG (dBμV/m)= Corr. (dB/m)+ Read Level (dBμV)
3. Margin (dB) = Peak/AVG (dBμV/m)-Limit PK/AVG(dBμV/m)
4. The tests evaluated1-26.5GHz,The testing has been conformed to the 10th harmonic of the highest fundamental frequency.
5. No report for the emission which more than 20dB below the prescribed limit.
6. The peak value＜average limit, So only show the peak value.

Temperature:	22.4℃	**Relative Humidity:**	42%
Test Voltage:	AC 120V/60Hz		
Ant. Pol.	Vertical		
Test Mode:	TX n(HT20) Mode 2412MHz		

No.	Frequency (MHz)	Reading (dBuV)	Factor (dB/m)	Level (dBuV/m)	Limit (dBuV/m)	Margin (dB)	Detector
1	12118.000	43.15	-0.66	42.49	74.00	-31.51	peak
2 *	14387.500	41.69	0.91	42.60	74.00	-31.40	peak

Remark:
1. Corr. = Antenna Factor (dB/m) + Cable Loss (dB)
2. Peak/AVG (dBμV/m)= Corr. (dB/m)+ Read Level (dBμV)
3. Margin (dB) = Peak/AVG (dBμV/m)-Limit PK/AVG(dBμV/m)
4. The tests evaluated1-26.5GHz,The testing has been conformed to the 10th harmonic of the highest fundamental frequency.
5. No report for the emission which more than 20dB below the prescribed limit.
6. The peak value＜average limit, So only show the peak value.

Temperature:	22.4℃	**Relative Humidity:**	42%
Test Voltage:	AC 120V/60Hz		
Ant. Pol.	Horizontal		
Test Mode:	TX n(HT20) Mode 2437MHz		

No.	Frequency (MHz)	Reading (dBuV)	Factor (dB/m)	Level (dBuV/m)	Limit (dBuV/m)	Margin (dB)	Detector
1	10868.500	44.35	-1.93	42.42	74.00	-31.58	peak
2 *	13546.000	42.55	0.02	42.57	74.00	-31.43	peak

Remark:
1. Corr. = Antenna Factor (dB/m) + Cable Loss (dB)
2. Peak/AVG (dBμV/m)= Corr. (dB/m)+ Read Level (dBμV)
3. Margin (dB) = Peak/AVG (dBμV/m)-Limit PK/AVG(dBμV/m)
4. The tests evaluated1-26.5GHz,The testing has been conformed to the 10th harmonic of the highest fundamental frequency.
5. No report for the emission which more than 20dB below the prescribed limit.
6. The peak value＜average limit, So only show the peak value.

Temperature:	22.4℃	**Relative Humidity:**	42%
Test Voltage:	AC 120V/60Hz		
Ant. Pol.	Vertical		
Test Mode:	TX n(HT20) Mode 2437MHz		

No.	Frequency (MHz)	Reading (dBuV)	Factor (dB/m)	Level (dBuV/m)	Limit (dBuV/m)	Margin (dB)	Detector
1 *	10945.000	45.16	-1.80	43.36	74.00	-30.64	peak
2	13240.000	43.32	-0.20	43.12	74.00	-30.88	peak

Remark:
1. Corr. = Antenna Factor (dB/m) + Cable Loss (dB)
2. Peak/AVG (dBμV/m)= Corr. (dB/m)+ Read Level (dBμV)
3. Margin (dB) = Peak/AVG (dBμV/m)-Limit PK/AVG(dBμV/m)
4. The tests evaluated1-26.5GHz,The testing has been conformed to the 10th harmonic of the highest fundamental frequency.
5. No report for the emission which more than 20dB below the prescribed limit.
6. The peak value＜average limit, So only show the peak value.

Temperature:	22.4℃	**Relative Humidity:**	42%
Test Voltage:	AC 120V/60Hz		
Ant. Pol.	Horizontal		
Test Mode:	TX n(HT20) Mode 2462MHz		

No.	Frequency (MHz)	Reading (dBuV)	Factor (dB/m)	Level (dBuV/m)	Limit (dBuV/m)	Margin (dB)	Detector
1 *	11123.500	45.35	-2.21	43.14	74.00	-30.86	peak
2	14107.000	42.86	0.16	43.02	74.00	-30.98	peak

Remark:
1. Corr. = Antenna Factor (dB/m) + Cable Loss (dB)
2. Peak/AVG (dBμV/m)= Corr. (dB/m)+ Read Level (dBμV)
3. Margin (dB) = Peak/AVG (dBμV/m)-Limit PK/AVG(dBμV/m)
4. The tests evaluated1-26.5GHz,The testing has been conformed to the 10th harmonic of the highest fundamental frequency.
5. No report for the emission which more than 20dB below the prescribed limit.
6. The peak value＜average limit, So only show the peak value.

Temperature:	22.4℃	**Relative Humidity:**	42%
Test Voltage:	AC 120V/60Hz		
Ant. Pol.	Vertical		
Test Mode:	TX n(HT20) Mode 2462MHz		

No.	Frequency (MHz)	Reading (dBuV)	Factor (dB/m)	Level (dBuV/m)	Limit (dBuV/m)	Margin (dB)	Detector
1	11939.500	43.37	-1.01	42.36	74.00	-31.64	peak
2 *	13520.500	43.42	0.07	43.49	74.00	-30.51	peak

Remark:
1. Corr. = Antenna Factor (dB/m) + Cable Loss (dB)
2. Peak/AVG (dBμV/m)= Corr. (dB/m)+ Read Level (dBμV)
3. Margin (dB) = Peak/AVG (dBμV/m)-Limit PK/AVG(dBμV/m)
4. The tests evaluated1-26.5GHz,The testing has been conformed to the 10th harmonic of the highest fundamental frequency.
5. No report for the emission which more than 20dB below the prescribed limit.
6. The peak value＜average limit, So only show the peak value.

Temperature:	22.4℃	**Relative Humidity:**	42%
Test Voltage:	AC 120V/60Hz		
Ant. Pol.	Horizontal		
Test Mode:	TX n(HT40) Mode 2422MHz		

No.	Frequency (MHz)	Reading (dBuV)	Factor (dB/m)	Level (dBuV/m)	Limit (dBuV/m)	Margin (dB)	Detector
1	10409.500	45.08	-3.72	41.36	74.00	-32.64	peak
2 *	13546.000	43.30	0.02	43.32	74.00	-30.68	peak

Remark:
1. Corr. = Antenna Factor (dB/m) + Cable Loss (dB)
2. Peak/AVG (dBμV/m)= Corr. (dB/m)+ Read Level (dBμV)
3. Margin (dB) = Peak/AVG (dBμV/m)-Limit PK/AVG(dBμV/m)
4. The tests evaluated1-26.5GHz,The testing has been conformed to the 10th harmonic of the highest fundamental frequency.
5. No report for the emission which more than 20dB below the prescribed limit.
6. The peak value＜average limit, So only show the peak value.

Temperature:	22.4℃	**Relative Humidity:**	42%
Test Voltage:	AC 120V/60Hz		
Ant. Pol.	Vertical		
Test Mode:	TX n(HT40) Mode 2422MHz		

No.	Frequency (MHz)	Reading (dBuV)	Factor (dB/m)	Level (dBuV/m)	Limit (dBuV/m)	Margin (dB)	Detector
1	10843.000	45.04	-2.04	43.00	74.00	-31.00	peak
2 *	13265.500	43.77	-0.20	43.57	74.00	-30.43	peak

Remark:
1. Corr. = Antenna Factor (dB/m) + Cable Loss (dB)
2. Peak/AVG (dBμV/m)= Corr. (dB/m)+ Read Level (dBμV)
3. Margin (dB) = Peak/AVG (dBμV/m)-Limit PK/AVG(dBμV/m)
4. The tests evaluated1-26.5GHz,The testing has been conformed to the 10th harmonic of the highest fundamental frequency.
5. No report for the emission which more than 20dB below the prescribed limit.
6. The peak value＜average limit, So only show the peak value.

Temperature:	22.4℃	**Relative Humidity:**	42%
Test Voltage:	AC 120V/60Hz		
Ant. Pol.	Horizontal		
Test Mode:	TX n(HT40) Mode 2437MHz		

No.	Frequency (MHz)	Reading (dBuV)	Factor (dB/m)	Level (dBuV/m)	Limit (dBuV/m)	Margin (dB)	Detector
1	10894.000	45.20	-1.80	43.40	74.00	-30.60	peak
2 *	14285.500	43.55	0.30	43.85	74.00	-30.15	peak

Remark:
1. Corr. = Antenna Factor (dB/m) + Cable Loss (dB)
2. Peak/AVG (dBμV/m)= Corr. (dB/m)+ Read Level (dBμV)
3. Margin (dB) = Peak/AVG (dBμV/m)-Limit PK/AVG(dBμV/m)
4. The tests evaluated1-26.5GHz,The testing has been conformed to the 10th harmonic of the highest fundamental frequency.
5. No report for the emission which more than 20dB below the prescribed limit.
6. The peak value＜average limit, So only show the peak value.

Temperature:	22.4℃	**Relative Humidity:**	42%
Test Voltage:	AC 120V/60Hz		
Ant. Pol.	Vertical		
Test Mode:	TX n(HT40) Mode 2437MHz		

No.	Frequency (MHz)	Reading (dBuV)	Factor (dB/m)	Level (dBuV/m)	Limit (dBuV/m)	Margin (dB)	Detector
1	10460.500	46.47	-3.63	42.84	74.00	-31.16	peak
2 *	14158.000	43.22	0.22	43.44	74.00	-30.56	peak

Remark:
1. Corr. = Antenna Factor (dB/m) + Cable Loss (dB)
2. Peak/AVG (dBμV/m)= Corr. (dB/m)+ Read Level (dBμV)
3. Margin (dB) = Peak/AVG (dBμV/m)-Limit PK/AVG(dBμV/m)
4. The tests evaluated1-26.5GHz,The testing has been conformed to the 10th harmonic of the highest fundamental frequency.
5. No report for the emission which more than 20dB below the prescribed limit.
6. The peak value＜average limit, So only show the peak value.

Temperature:	22.4℃	**Relative Humidity:**	42%
Test Voltage:	AC 120V/60Hz		
Ant. Pol.	Horizontal		
Test Mode:	TX n(HT40) Mode 2452MHz		

No.	Frequency (MHz)	Reading (dBuV)	Factor (dB/m)	Level (dBuV/m)	Limit (dBuV/m)	Margin (dB)	Detector
1 *	10945.000	45.61	-1.80	43.81	74.00	-30.19	peak
2	13214.500	42.67	-0.20	42.47	74.00	-31.53	peak

Remark:
1. Corr. = Antenna Factor (dB/m) + Cable Loss (dB)
2. Peak/AVG (dBμV/m)= Corr. (dB/m)+ Read Level (dBμV)
3. Margin (dB) = Peak/AVG (dBμV/m)-Limit PK/AVG(dBμV/m)
4. The tests evaluated1-26.5GHz,The testing has been conformed to the 10th harmonic of the highest fundamental frequency.
5. No report for the emission which more than 20dB below the prescribed limit.
6. The peak value＜average limit, So only show the peak value.

Temperature:	22.4℃	**Relative Humidity:**	42%
Test Voltage:	AC 120V/60Hz		
Ant. Pol.	Vertical		
Test Mode:	TX n(HT40) Mode 2452MHz		

No.	Frequency (MHz)	Reading (dBuV)	Factor (dB/m)	Level (dBuV/m)	Limit (dBuV/m)	Margin (dB)	Detector
1 *	11761.000	45.03	-1.05	43.98	74.00	-30.02	peak
2	14566.000	42.38	0.79	43.17	74.00	-30.83	peak

Remark:
1. Corr. = Antenna Factor (dB/m) + Cable Loss (dB)
2. Peak/AVG (dBμV/m)= Corr. (dB/m)+ Read Level (dBμV)
3. Margin (dB) = Peak/AVG (dBμV/m)-Limit PK/AVG(dBμV/m)
4. The tests evaluated1-26.5GHz,The testing has been conformed to the 10th harmonic of the highest fundamental frequency.
5. No report for the emission which more than 20dB below the prescribed limit.
6. The peak value＜average limit, So only show the peak value.

-----END OF REPORT------