DOOR/DRAWER LOCK PARTS

Door/Drawer Lock Kit - 185-00426

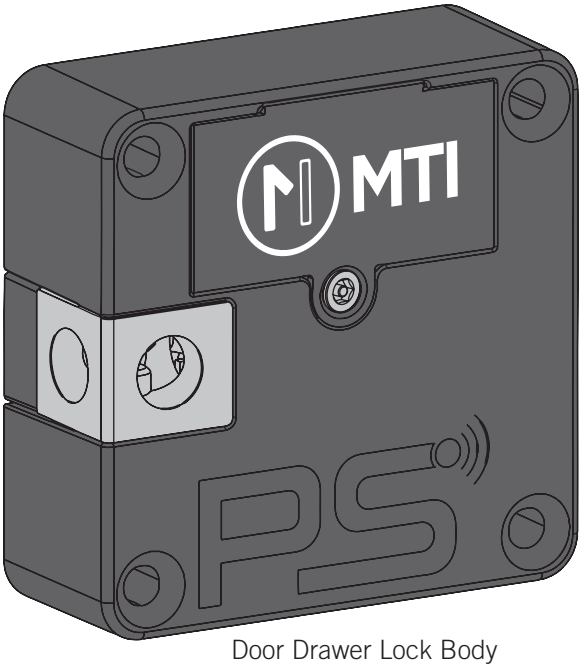

Door Drawer Lock Body

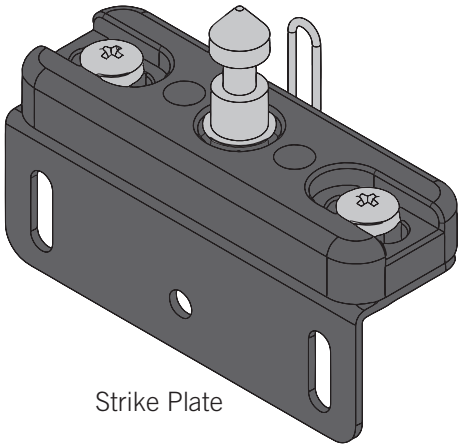

Strike Plate

Screw Kit

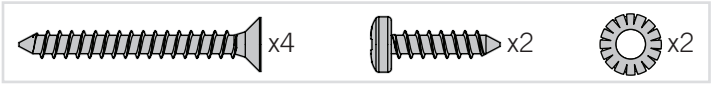

Battery

Keys not included. See Page 6.

MOUNTING TEMPLATE Print or Photocopy at 100% to assist in placing the Door/Drawer Lock.

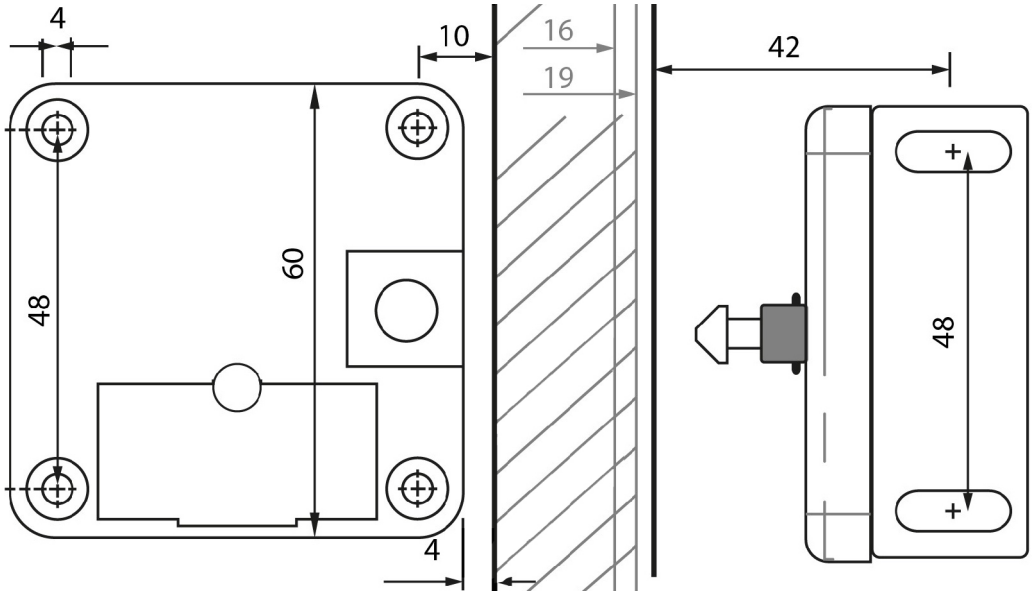

MTI P/N 063-00244 rev A ©2019 MTI All Rights Reserved

BATTERY INSTALLATION

1

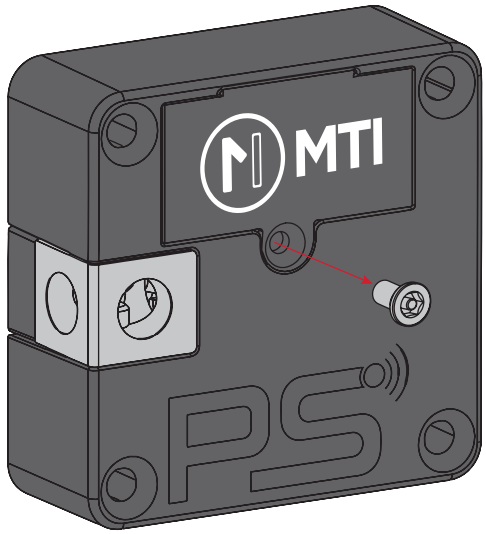

2

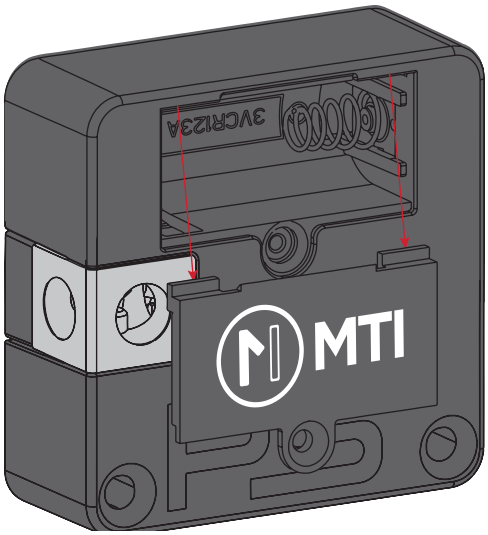

3

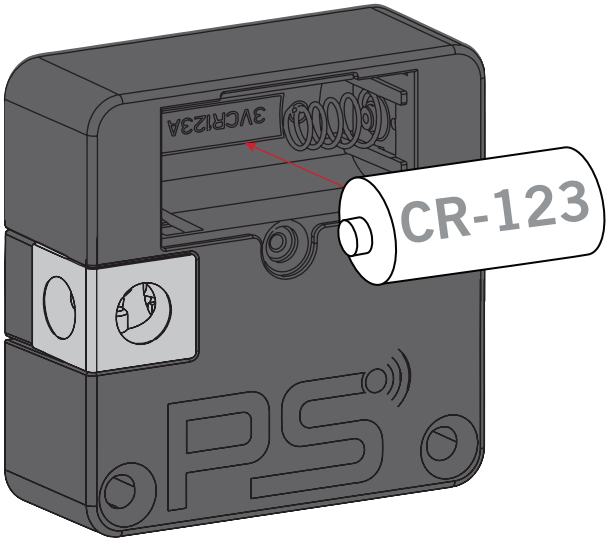

4

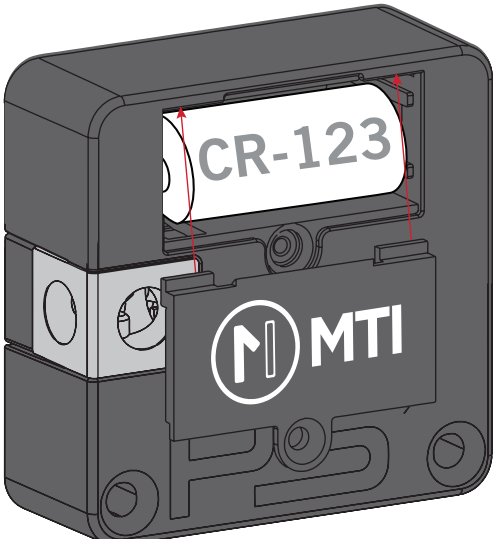

5

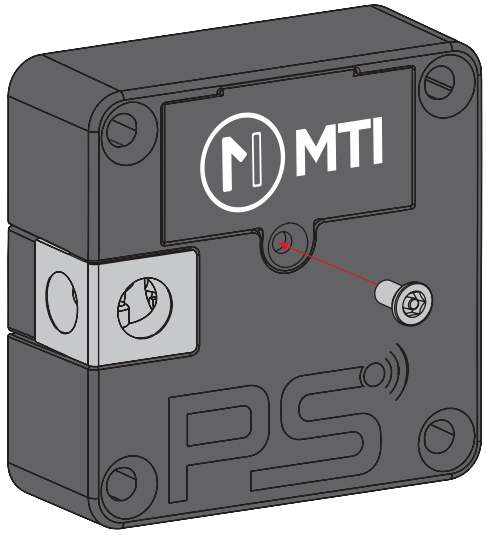

Battery Caution

Risk of explosion if battery is replaced by an incorrect type. Dispose of used batteries according to the instructions.

Remove batteries of uninstalled locks before storing.

MTI P/N 063-00244 rev A ©2019 MTI All Rights Reserved

DOOR/DRAWER INSTALLATION

1 Drill pilot holes for the lock mounting screws. See page 1 for a mounting template to assist in placement.

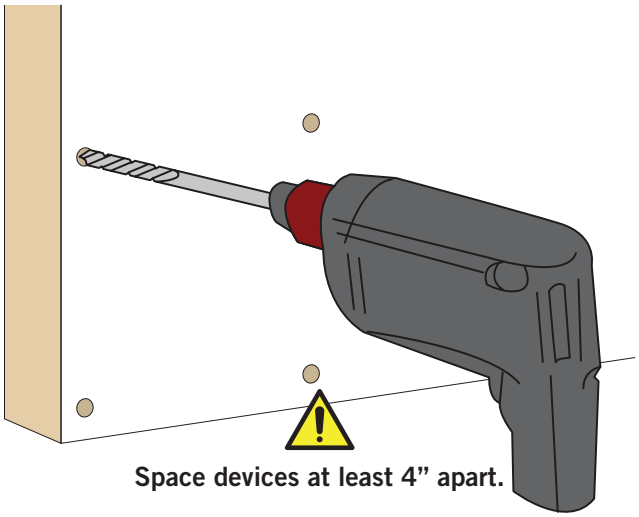

Space devices at least 4" apart.

2 Line up the holes on the lock with the pilot holes in the fixture and secure into place with a Phillips-head screwdriver.

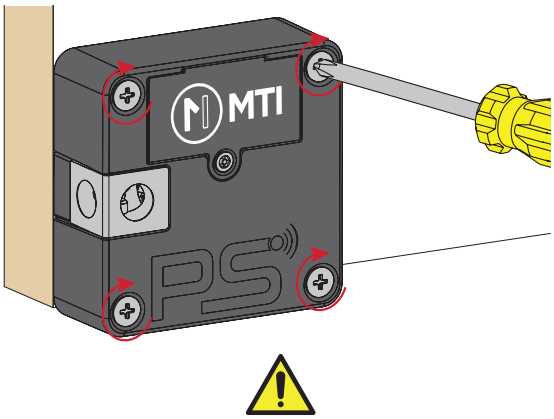

Only use hand tools to install lock. Use of power tools can damage the fixture.

3a See diagram below for placement on a swinging cabinet door:

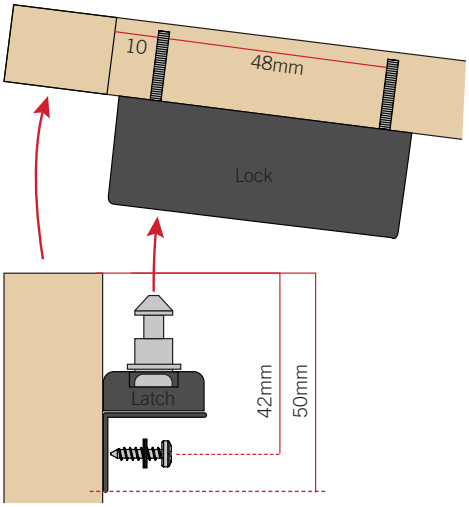

3b For sliding doors, the 90° bracket can be removed from the latch (using the #2 Phillips Screwdriver and the 9/32" socket) and hard mounted to a fixture with wood screws. See diagram below for placement on a sliding cabinet door:

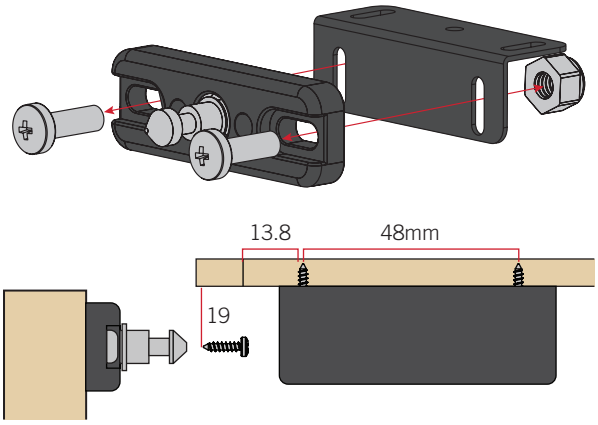

Using the Drawer/Door Locks:

After programming the locks (see page 6 for initial setup), place the User Card within 30 mm of where the lock is placed. One you hear a click, open the door or drawer. Close door or drawer to relock.

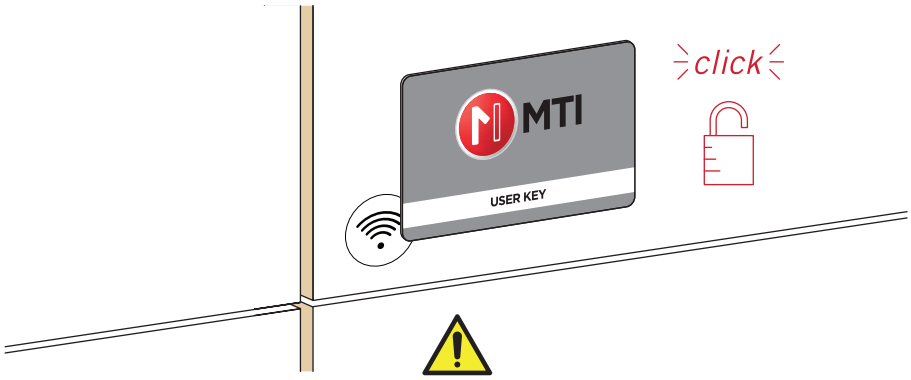

Self-closing hinges may prevent proper function of the door/drawer lock.

Note: If the lock emits a slow, low beep tone, then the motor is stuck due to overtightening the mounting screws. Slowly unscrew the screw to the left of the battery door (when the MTI logo is right-side-up) one-quarter turn at a time until the motor can spin, opening the lock.

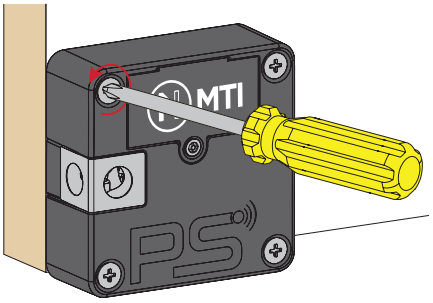

MTI P/N 063-00244 rev A ©2019 MTI All Rights Reserved

KEY SETS (SOLD SEPARATELY)

Key Starter Set – 185-00459

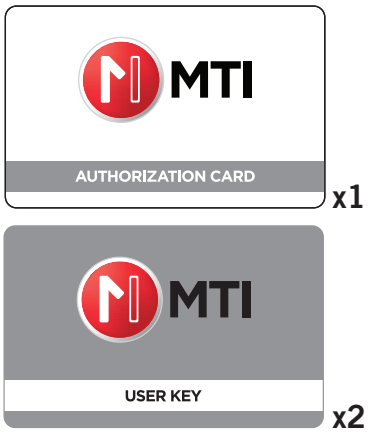

User Key Bulk (x5) Pack - 185-00460

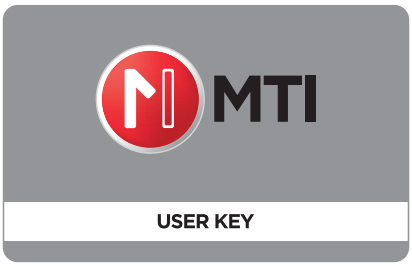

x5

Connect Card - 401-00008

x1

KEY REGISTRATION

1 Swipe Authorization card to enter enrollment mode. You will hear a double beep tone, indicating enrollment mode has been entered.

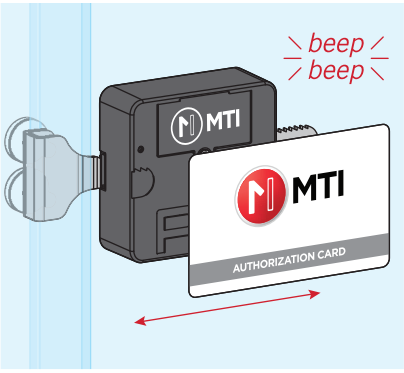

2 Swipe each User card to lock. A double beep tone indicates a card is now enrolled. Repeat for each user card, up to 250 user cards. If a card fails to be recognized, the lock will emit 4 fast beeps.

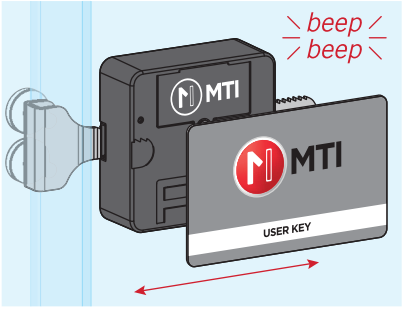

3 Swipe Authorization card again to close enrollment mode. Enrollment mode times out after 3 minutes of no activity. Lock will emit 4 fast beeps when enrollment has timed out.

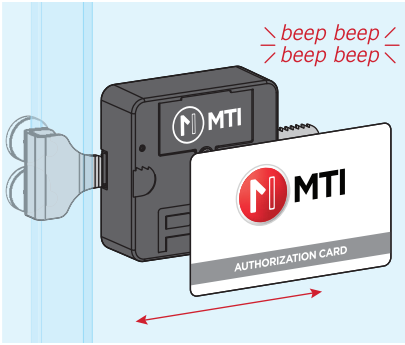

DELETING KEYS

1 Hold Authorization Card to lock for 5 seconds, and lock will start a ticking sound. This enters delete mode.

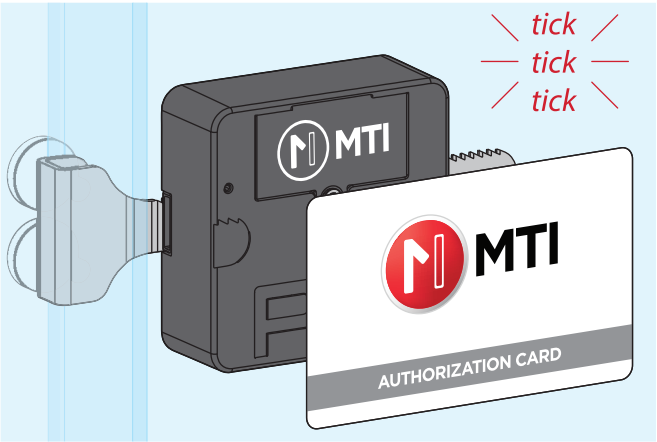

2 Swipe Authorization Card again to lock, within 10 seconds to clear all keys returning lock to a factory reset state. Lock will emit a double beep, confirming the key whitelist is cleared. It will stop ticking after 10 seconds and resume normal operation if the Authorization Card is not swiped again.

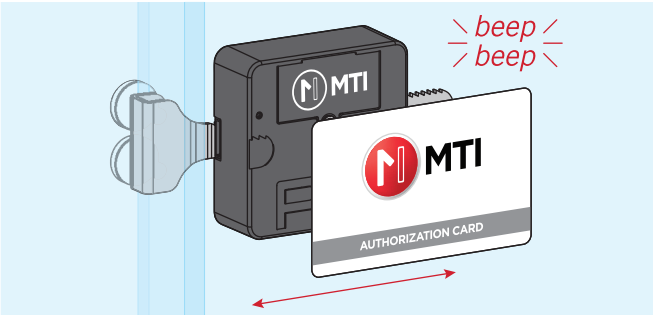

MTI P/N 063-00244 rev A ©2019 MTI All Rights Reserved

Note:

Operating temperature: 41-95° F.

Converting to Connect Lock

To use the MTI Connect Business Intelligence feature of your MTI locks you must have an internet connection, a MTI Connect Hub to create the mesh network, and the MTI Connect Card, which allows you to convert modes. In Connect mode, the lock will check in with the Hub every hour, and every time a lock is accessed. During check-in, the Hub will look for new key white list, report lock status, battery status, and lock ID.

1. Hook up Connect Hub to Ethernet or Wifi Connection.
2. Apply power to Connect Hub, and put into Provisioning mode. This allows the Connect Hub to look for locks trying to enter the mesh network. Refer to the instructions that came with the Connect Hub for how to enter provisioning mode.
3. Swipe MTI Connect card on lock to enter Connect Provisioning mode. The lock will emit a double beep tone, and then emits a constant series of slow beeps until it finds the network. When it is connected, it will emit a double beep confirmation tone, retrieve the white list of keys from the network, and now operate as a Connect lock. If no network is detected in 1 minute 20 seconds, the lock will emit four fast beeps, indicating a time out, and revert back to a non-Connect run mode. When lock enters Connect mode, it will erase all keys previously programmed to that lock, defaulting to the key whitelist it retrieves from the Connect Hub.

Reverting Connect Lock to Non-Connect

1. Power down Connect Hub to disable the mesh network. This will ensure the lock is not trying to locate a mesh.
2. Hold Connect card to lock for 10 seconds. Lock will emit a fast double confirmation beep. After 5 seconds it will emit four fast beeps. Lock has reverted to a non-Connect operating mode.
3. Keys previously whitelisted in Connect mode will still continue to work.

Factory Reset

There are several methods to reset a lock to a factory default.

1. Remove lock from fixture to gain access to reset button on lock. If fixture is stuck closed, proceed to step 3.
2. Press and hold button on back of lock for 3 seconds until it starts emitting a beeping tone. It will emit beeps for 5 seconds. When it stops beeping, lock will be at a factory reset position with the tumbler in the open position.
3. If lock is not accessible to remove, a factory reset key must be used. With a factory reset key, swipe the lock once, you will hear consistent four beep bursts.
4. Swipe card again within 5 seconds. Allow the lock to set for several seconds, and it will reset itself to a factory reset, with the tumbler in the open position. This will remove any key whitelist
5. Follow whitelist process to program new keys.

Features

- **Door Open Mode -** If a lock has been left open for 5 minutes, the lock will emit a continuous on/off beep tone for 10 minutes or until the door is closed.
- **Stuck Lock -** If a lock is jammed or unable to unlock, the lock will emit a slow beep tone to indicate that the lock is stuck.
- **Low Battery -** If the lock battery is low and needs replacement, the lock will emit a long single beep on every card swipe.
  - Lock will beep every hour when it reaches 10% capacity.
  - Lock will default to the open position when battery reaches 0%
  - Battery health is indicated in Connect App, reported every hour.

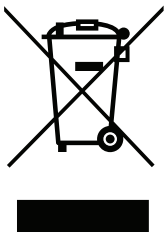

Correct Disposal of Product

This marking indicates that this product should not be disposed with other household wastes throughout the EU. To prevent harm to the environment or human health from uncontrolled waste disposal, recycle it responsibly to promote the sustainable reuse of material resources. To dispose of used devices contact MTI Global Services Contact Center at 503-648-6500 or contact local recycling company for proper recycling instructions for electronic devices.

MTI P/N 063-00244 rev A ©2019 MTI All Rights Reserved

FCC Statement

FCC ID: 2AA2X-15ØØØ11824

Model: Door Lock

FCC STATEMENT

This device complies with Part 15 of the FCC Rules.

Caution: If any changes or modifications not expressly approved by the party responsible for compliance could void the user's authority to operate the equipment.

Operation is subject to the following two conditions: (1) This device may not cause harmful interference, and (2) This device must accept any interference received, including interference that may cause undesired operation.

The grantee is not responsible for any changes or modifications not expressly approved by the party responsible for compliance. Such modifications could void the user's authority to operate the equipment.

The RF Exposure Compliance distance is 20 millimeters.

NOTE: This equipment has been tested and found to comply with the limits for a Class B digital device, pursuant to part 15 of the FCC Rules. These limits are designed to provide reasonable protection against harmful interference in a residential installation. This equipment generates, uses and can radiate radio frequency energy and, if not installed and used in accordance with the instructions, may cause harmful interference to radio communications. However, there is no guarantee that interference will not occur in a particular installation. If this equipment does cause harmful interference to radio or television reception, which can be determined by turning the equipment off and on, the user is encouraged to try to correct the interference by one or more of the following measures:

- Reorient or relocate the receiving antenna.
- Increase the separation between the equipment and receiver.
- Connect the equipment into an outlet on a circuit different from that to which the receiver is connected.
- Consult the dealer or an experienced radio/TV technician for help.

ISED Certification Number: 24439-15ØØØ11824

Model: Door Lock

ISED Statement

This device complies with Innovation, Science and Economic Development Canada licence-exempt RSS standard(s). Operation is subject to the following two conditions: (1) this device may not cause interference, and (2) this device must accept any interference, including interference that may cause undesired operation of the device.

CAN ICES-3(B)/NMB-3(B)

Le présent appareil est conforme aux CNR Innovation, Sciences et Développement économique Canada applicables aux appareils radio exempts de licence. L'exploitation est autorisée aux deux conditions suivantes:

(1) il ne doit pas produire de brouillage et (2) l' utilisateur du dispositif doit étre prêt à accepter tout brouillage radioélectrique reçu, même si ce brouillage est susceptible de compromettre le fomctionnement du dispositif.

CAN ICES-3(B)/NMB-3(B)

The device meets the exemption from the routine evaluation limits in section 2.5 of RSS 102 and compliance with RSS-102 RF exposure, users can obtain Canadian information on RF exposure and compliance.

Le dispositif rencontre l'exemption des limites courantes d'évaluation dans la section 2.5 de RSS 102 et la conformité à l'exposition de RSS-102 rf, utilisateurs peut obtenir l'information canadienne sur l'exposition et la conformité de rf.

This transmitter must not be co-located or operating in conjunction with any other antenna or transmitter. This equipment should be installed and operated with a minimum distance of 20 millimeters between the radiator and your body.

Cet émetteur ne doit pas être Co-placé ou ne fonctionnant en même temps qu'aucune autre antenne ou émetteur. Cet équipement devrait être installé et actionné avec une distance minimum de 20 millimètres entre le radiateur et votre corps.

Technical Data

Operating frequency 125KHz , 2.4GHz : 2405- 2480MHz

Operating temperature: 0º C to 40º C

Max power : 125KHz <42dBuA/m at 10m, 2.4GHz < 20 dBm

MTI P/N 063-00244 rev A ©2019 MTI All Rights Reserved