Kodak

D4600 Duplex Photo Printer

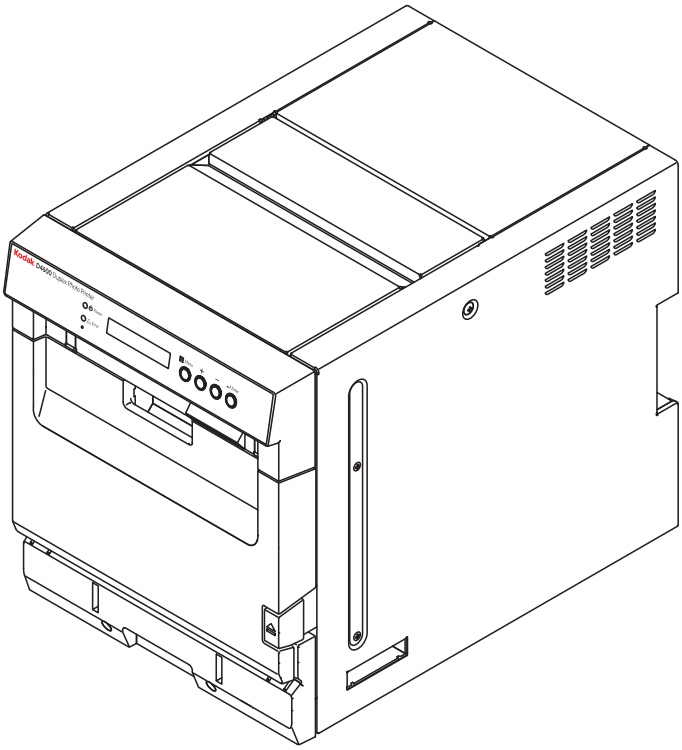

User's Guide

April 2014

TM/MC/MR Licensed from Eastman Kodak Company: Kodak
Kodak Alaris Inc.
2400 Mount Read Blvd., Rochester, N.Y. 14615
© 2014 Kodak Alaris Inc.
All rights reserved. Printed in U.S.A.
P/N 4J8241

Table of Contents

1 Setting Up the Printer

Package Contents 1-1
Preparing the Printer for Use 1-2
Installing the Front Door Waste Bin, Exit Tray, and Exit Tray Waste Bin 1-2
Connecting the Power Cable and the USB Cable 1-3
Turning On the Printer 1-4
Handling and Storing the Paper and Ribbon 1-4
Loading the Ribbon 1-5
Loading the Paper 1-7
Making a Test Print 1-11

2 Operating the Printer

Making Prints 2-1
Handling and Storing Prints 2-1
Operator Panel Lights 2-1
Operator Panel Buttons 2-2
Printer Settings 2-3

3 Maintaining the Printer

Performing Routine Maintenance 3-1
Removing the Exit Tray and the Exit Tray Waste Bin 3-2
Removing the Front Door Waste Bin 3-3
Cleaning the Exterior 3-3
Cleaning the Filters 3-4
Cleaning the Thermal Print Head and the Peel Roller 3-6
Cleaning the Platen and Pinch Rollers 3-8

4 Troubleshooting

Resolving Operator Panel Status/Error Messages 4-2
Clearing a Paper Jam 4-4
Recovering from a Power Interruption 4-6

Appendix A: Additional Information

System Requirements A-1
Printer Specifications A-1
Printer Supplies A-2
Paper and Ribbon A-2
Thermal Printer Cleaning Kit A-3
Packing and Transporting the Printer A-3
Getting Help A-3

Appendix B: Safety and Regulatory Information

Important Safety Information B-1
Safety Labels B-2
Regulatory and Safety Compliance B-4
Safety B-4
Electromagnetic Compatibility (EMC) B-4
Disposal B-5

1 Setting Up the Printer

Package Contents

The KODAK D4600 Duplex Photo Printer is packaged with the following items:

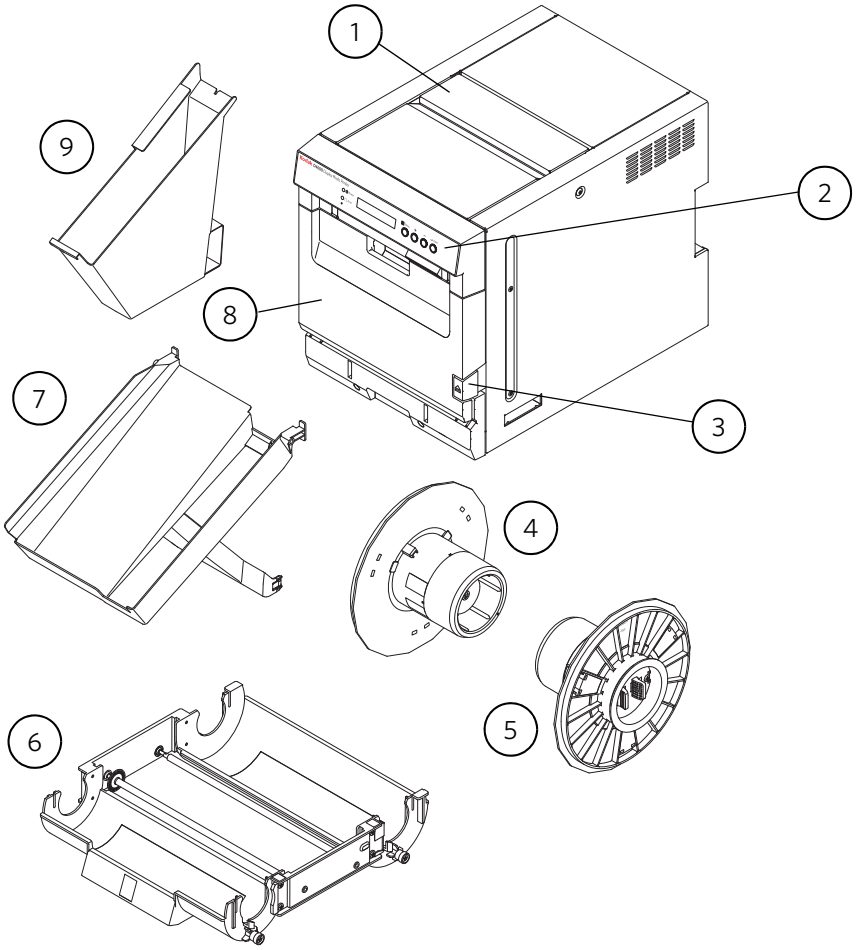

1. Top cover
2. Operator panel
3. Release button
4. Paper flange with gear (yellow)
5. Paper flange without gear (black)
6. Ribbon cassette
7. Exit tray
8. Front door waste bin
9. Exit tray waste bin

Preparing the Printer for Use

CAUTION:
The printer weighs approximately 30 kg 66.14 lbs). Use caution when moving the printer.

NOTE: Keep the carton and packaging in case you ever need to transport the printer.

Installing the Front Door Waste Bin, Exit Tray, and Exit Tray Waste Bin

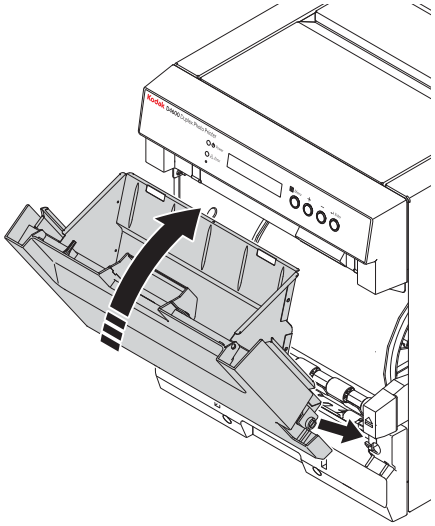

1. Install the front door waste bin. Align the waste bin with the rail on the side of the printer.

NOTE: If the waste bin is not inserted properly, a paper jam can occur.

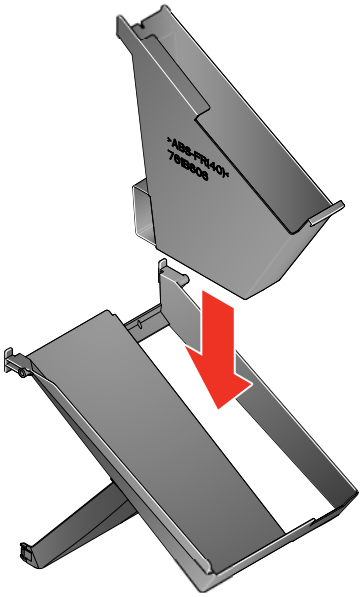

2. Insert the exit tray waste bin into the exit tray.

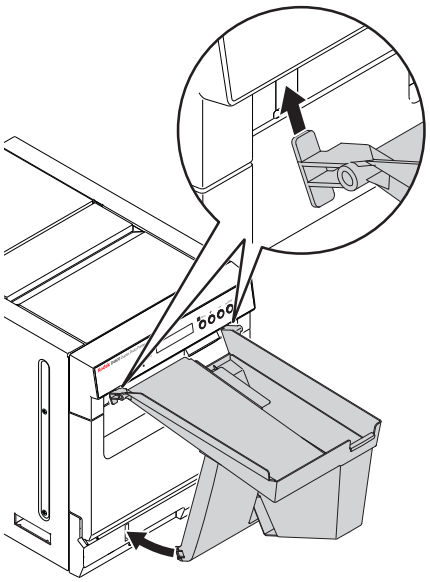

3. Install the exit tray. Slide it downward into the four slots on the printer.

Connecting the Power Cable and the USB Cable

If you received more than one power cable with your printer, make sure to use the correct power cable for your country.

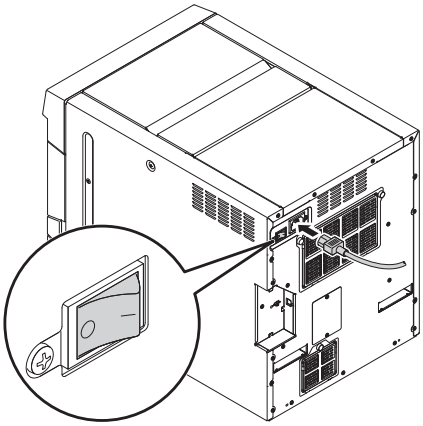

1. Check that the power switch is turned off (○).

CAUTION:
The power outlet must be grounded. An ungrounded outlet can cause fire, electric shock, or harmful interference to nearby electrical devices.

2. Connect the power cable to the power connector on the back of the printer and to a grounded power outlet.

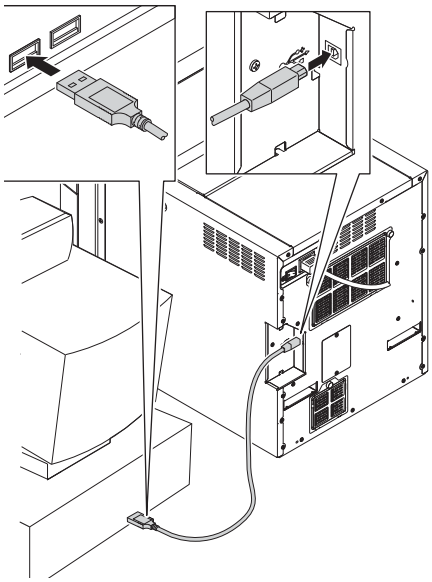

3. Connect the USB cable (not included) to the USB connector on the back of the printer and to the USB connector on the computer.

Turning On the Printer

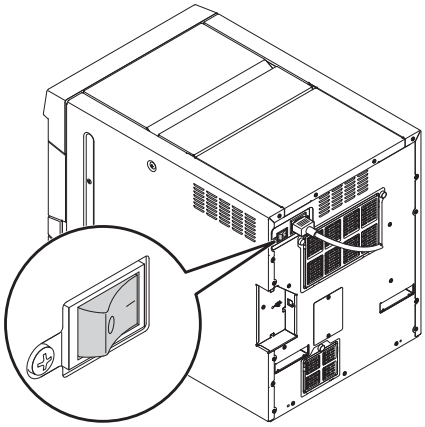

Move the power switch to on (**|**).

On the operator panel, the orange Power light illuminates. If paper and ribbon are loaded, ***Ready 8x10*** *or* ***Ready 8x12*** *appears, depending on the size of ribbon that is loaded.*

To turn off the printer, move the power switch to off (◯).

Handling and Storing the Paper and Ribbon

For the best quality prints, carefully handle and store the paper and ribbons.

- To avoid fingerprints, handle the ribbon by the spool ends and the paper by the edges. Do not touch the ribbon material or the glossy sides of the paper.
- Store the paper and ribbons away from direct sunlight, at a temperature of 30° C (86° F) or lower and a relative humidity of 60% or lower.

Loading the Ribbon

Make sure you have the KODAK D4600S Duplex Photo Ribbon or KODAK D4600L Duplex Photo Ribbon available (see "Printer Supplies" on page A-2).

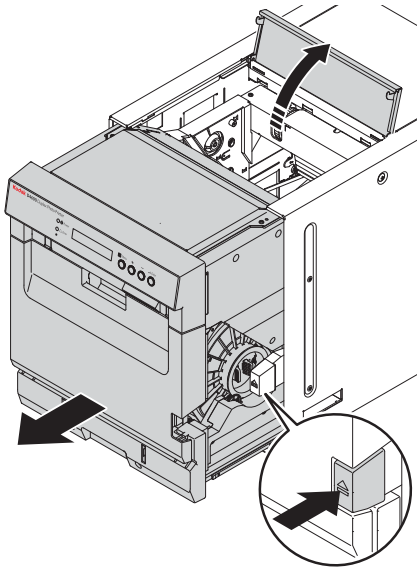

1. Make sure the power switch is turned on (**|**).
2. Open the front of the printer.
   - Press the release button.
   - Pull the front of the printer forward until it stops.
3. Open the top door of the printer.
4. Are you loading the ribbon for the first time?

Yes	**No**
Go to step 8.	Continue with step 5.

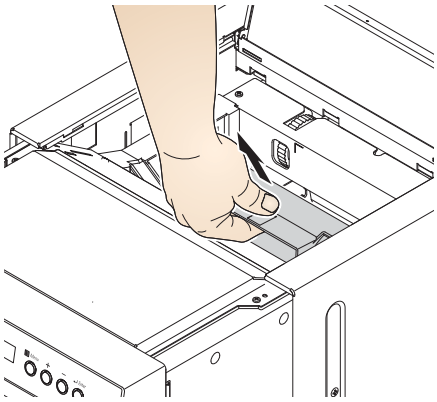

5. Pull up on the handle to remove the cassette. Support the cassette with two hands.
6. Place the cassette onto a flat surface.

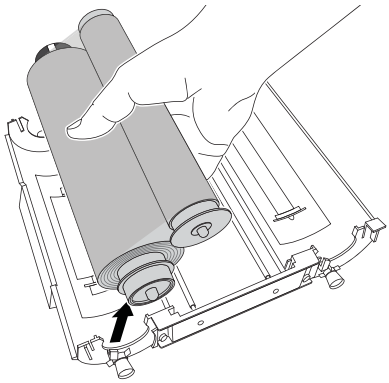

7. Remove the used ribbon from the cassette. Dispose of the used ribbon appropriately.

IMPORTANT: *Images remain on the ribbon after printing. Maintain confidentiality.*

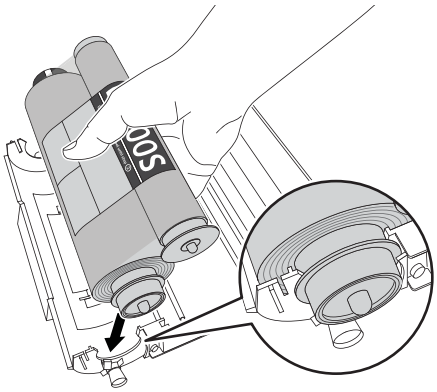

8. Load the new ribbon into the cassette:
   a. Remove the plastic wrapper from the new ribbon. Do not remove the paper band.
   b. Place the supply spool in the cassette on the side with the yellow label. Make sure that the flange on the spool is seated on the outside of the cassette.
   c. Snap the spool into place.

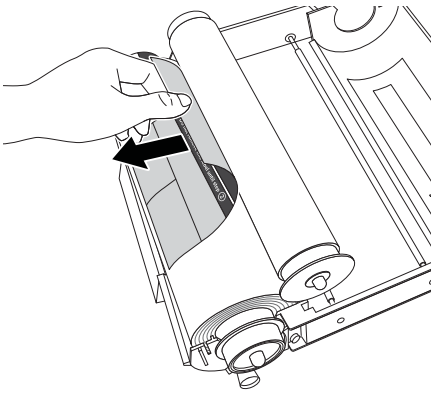

9. Remove the paper band from the ribbon.

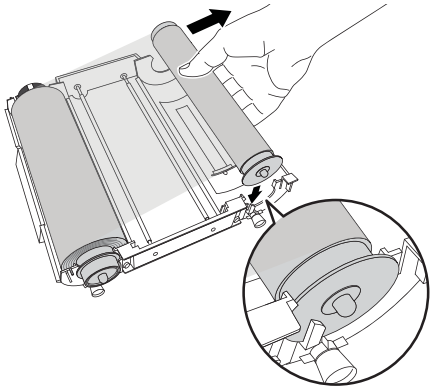

10. Place the take-up spool in the cassette on the side with the white label. Make sure that the flange on the spool is seated on the outside of the cassette.
11. Snap the spool into place.

IMPORTANT: *Slack in the ribbon can cause a paper jam.*

12. Remove any slack in the ribbon by turning the supply spool.

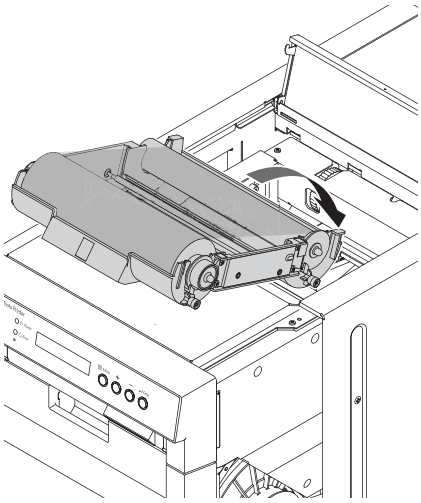

13. Insert the cassette until it clicks into place.

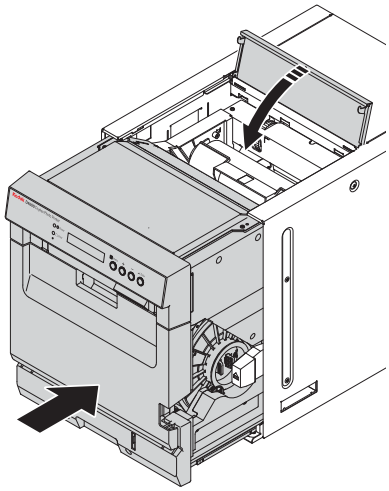

14. Close the top door.
15. Close the front of the printer.

Loading the Paper

Make sure you have the KODAK D4600 Photo Paper available (see "Printer Supplies" on page A-2).

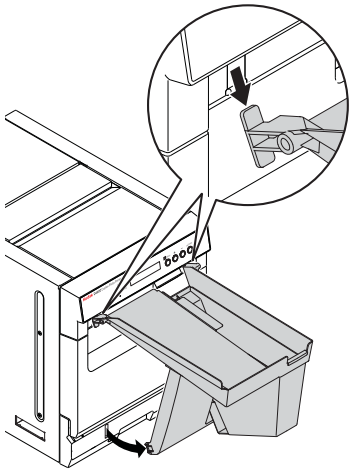

1. Make sure the power switch is turned on (**|**).
2. Remove the exit tray from the front of the printer.

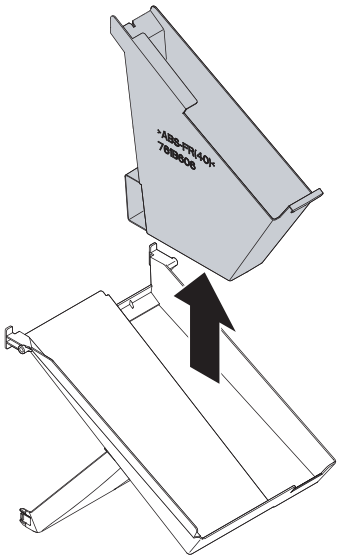

3. Remove and empty the exit tray waste bin.

NOTE: To keep your prints dust-free and to prevent paper jams, empty the waste bin each time you replace the paper.

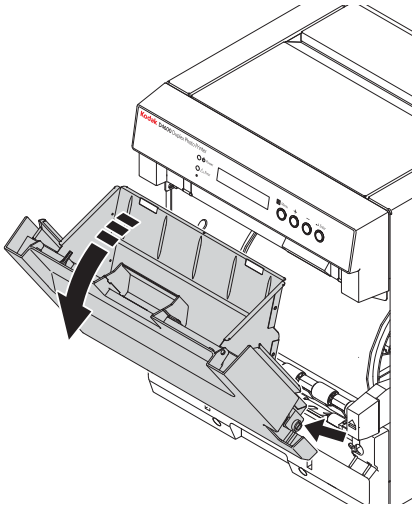

4. Remove the front door waste bin:
   a. Grasp the waste bin by the handle.
   b. Pull the waste bin towards you. Lift it up and out of the printer.
   c. Empty the waste bin.

NOTE: To keep your prints dust-free and to prevent paper jams, empty the waste bin each time you replace the paper.

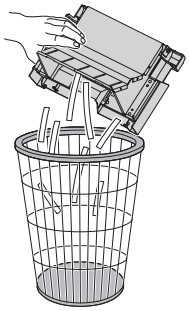

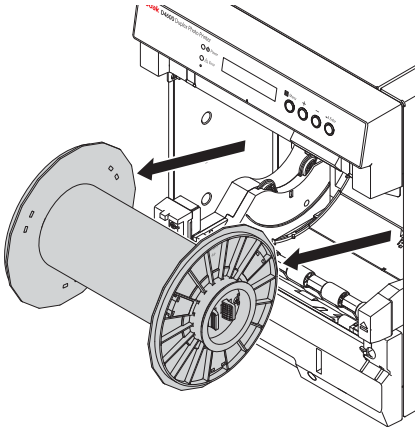

5. Are you loading paper for the first time?

Yes	**No**
Go to step 8.	Continue with step 6.

6. Remove the used paper roll.

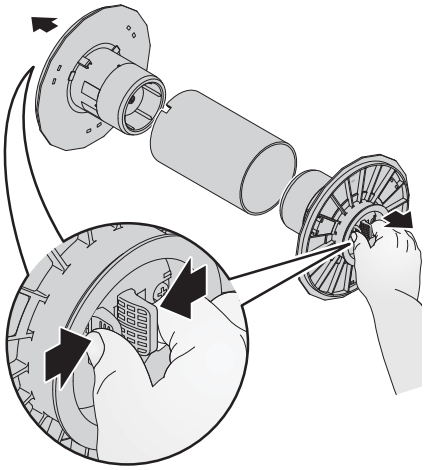

7. Squeeze the tabs at the end of the spool to remove the flanges. Save the flanges from the used paper roll.
8. Remove the plastic wrapper from the new paper roll. Do not remove the tape from the new paper roll.
9. Squeeze the tabs on the yellow flange and align the lugs on the flange with the notches in the new paper roll. Insert the yellow flange into the roll.
10. Squeeze the tabs on the black flange and insert the flange into the other end of the paper roll.

NOTE: If you do not attach the flanges properly, the paper roll will not fit into the printer.

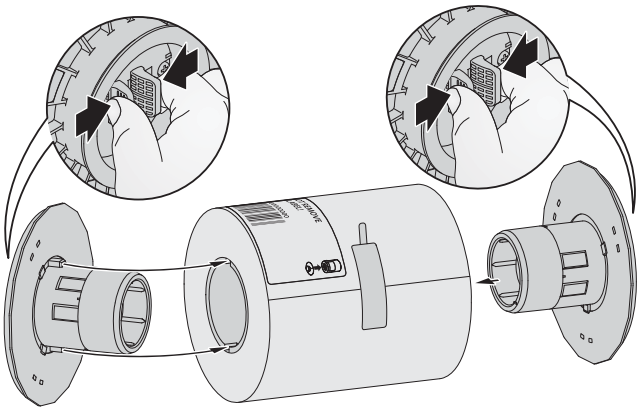

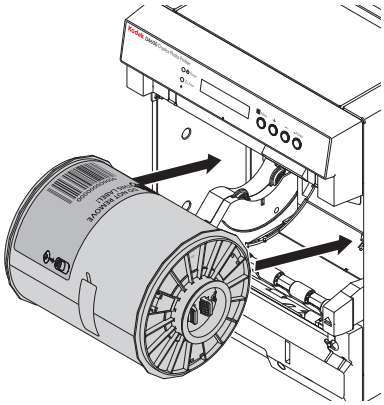

11. Match the colored flanges with the slots of the same color on the printer, then carefully lower the paper roll into the slots.

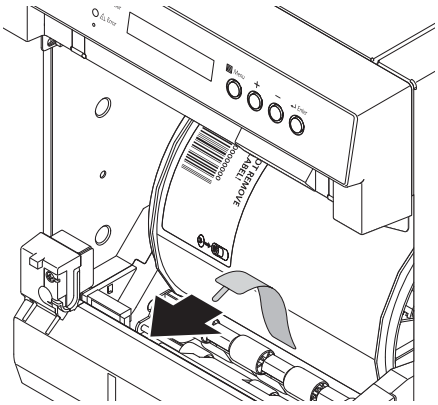

12. Remove the tape from the paper roll.

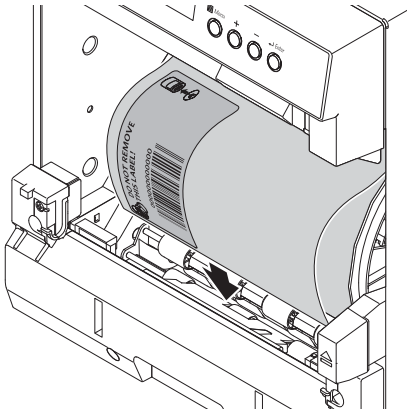

IMPORTANT: *The ribbon must be loaded into the printer (see* *"Loading the Ribbon" on page 1-5**) before the paper automatically loads and advances.*

13. Feed the paper between the rollers until the light in the printer turns green.

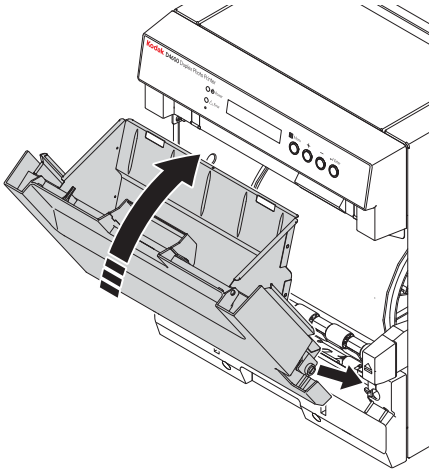

14. Insert the front door waste bin. Align it with the rail on the side of the printer.

NOTE: If the waste bin is not inserted properly, a paper jam can occur.

The printer loads the paper. Two blank sheets are printed—the portion of the roll that may have fingerprints as a result of handling. The printing of these sheets does not decrease the print capacity of the roll. Depending on the size of ribbon that is loaded, the operator panel displays ***Ready 8x10*** *or* ***Ready 8x12****.*

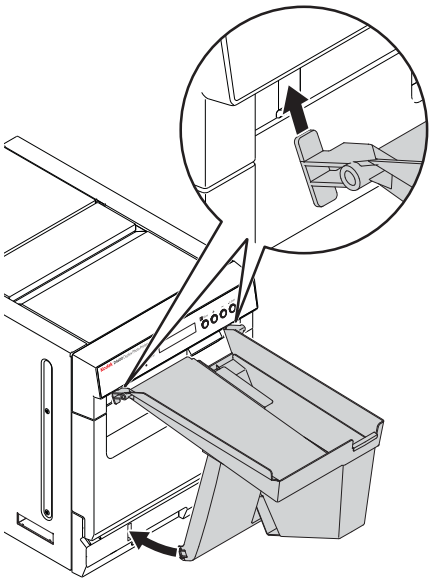

15. Wait for the blank sheets to exit the printer.
16. Insert the exit tray waste bin into the exit tray.
17. Install the exit tray.

Making a Test Print

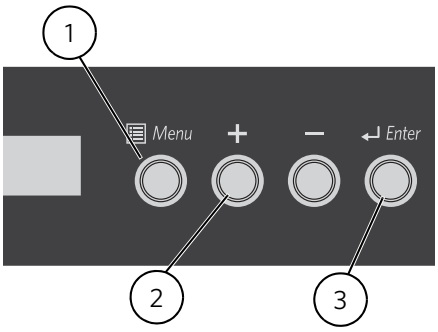

Make a test print to check that the printer is installed and set up correctly.

1. On the operator panel, press **Menu** until **Printer_Info** appears.
2. Press **+** until **Test_Prints** appears.
3. Press **Enter**.
4. Press **+** until the desired type of test print appears.
5. Press **Enter** to start printing the test print.
6. To exit Test Print Mode, press Menu until **Ready 8x10** or **Ready 8x12** appears.

For more information on using the operator panel in Setup mode, see "Printer Settings" on page 2-3.

2 Operating the Printer

Making Prints

You make prints using photo printing software applications. For application-specific printing information, see the user's guide or online Help for the software application.

Handling and Storing Prints

For best results:

- Make sure hands are clean and free of food, oil, and grease.
- Store prints in a cool, dry environment free of chemical contamination.
- Store prints at temperatures below 25° C (72° F) for extended periods.
- Store prints at a relative humidity between 30% and 50%.
- Avoid exposure to high-intensity light sources, particularly fluorescent light and sunlight, which are rich in ultraviolet radiation.
- Avoid exposure to vinyl items (those made of polyvinyl chloride, PVC) and any plastic that contains plasticizer. If you use transparent sleeves, make sure they are not PVC-based.

Operator Panel Lights

Light	Color	Printer Status
Power	Orange	The printer power is on.
Ready	Green	The printer is ready to make prints.
Error	Red	An error has occurred. See the message on the operator panel, then see "Resolving Operator Panel Status/Error Messages" on page 4-2.

Operator Panel Buttons

Button		Use
	Menu	To enter Setup Mode.
	Menu scroll	To scroll through printer settings.
	Setting options scroll	To scroll forward or backward through setting options.
	Enter	To initiate an action or accept a change.

Printer Settings

Use the operator panel buttons to review and change printer settings.

1. Press **Menu** to enter Setup Mode.
2. Press **+/-** to scroll through selections.
3. Press **Enter** to initiate an action or accept a change.
4. Press **Menu** to exit Setup Mode.

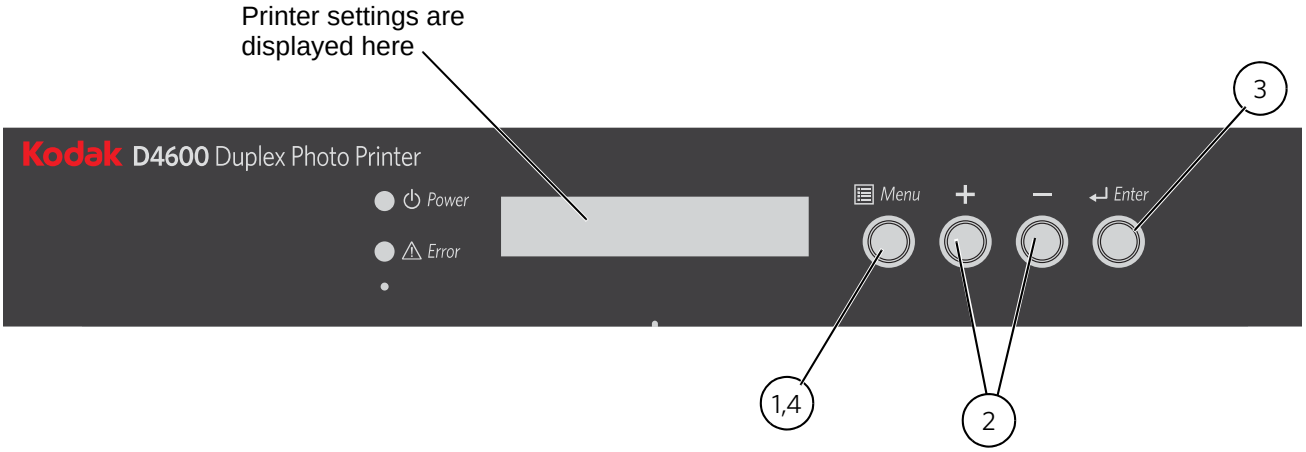

Display	Description
Ready 8x10 Ready 8x12	The printer is on and ready to make prints. **8x10** or **8x12** represents the size of ribbon that is loaded.
Test Print Mode	When selected, press **Enter** to make a test print (see "Making a Test Print" on page 1-11).
Remain = XXX/YYY	XXX represents how many remaining prints you can make with the current paper roll. YYY represents the total number of prints on a paper roll.
Printed = XXXXXX	XXXXXX represents the total number of prints made since the printer was manufactured. This counter cannot be reset.
Donor = XXX[%]	XXX[%] represents the percentage of the ribbon that is available for making prints.
MAIN Firm = XX.YY	XX.YY represents the version number of the printer control firmware.
DSP Firm = XX.YY	XX.YY represents the version number of the image processing firmware.
TABLE = XX.YY	XX.YY represents the version number of the print parameter table.

3 Maintaining the Printer

To ensure good printer performance and high-quality prints, make sure the KODAK D4600 Duplex Photo Printer and its environment are clean and dust free.

Performing Routine Maintenance

To maintain good print quality, clean the exterior (see page 3-3) of the printer and the filters regularly (see page 3-4) to eliminate dust buildup and prevent debris from entering the printer.

In addition, each time you change the ribbon, clean the following parts on both the left side and the right side of the printer:

- thermal print head and peel rollers (see page 3-6).
- platen rollers (see page 3-8).
- pinch rollers (see page 3-8).

Make sure you have the KODAK Thermal Printer Cleaning Kit available. This kit contains 10 individually packaged alcohol pads.

CAUTION:
Alcohol is a flammable liquid. It can cause eye irritation and dry skin. Wash your hands with soap and water following any maintenance procedures where you use alcohol pads. For additional information, see the Material Safety Data Sheet (MSDS), or visit: http://www.kodak.com/go/MSDS

For health, safety, and environmental information in the United States, call 585-722-5151. Customers outside the United States should contact their local customer service representative.

Removing the Exit Tray and the Exit Tray Waste Bin

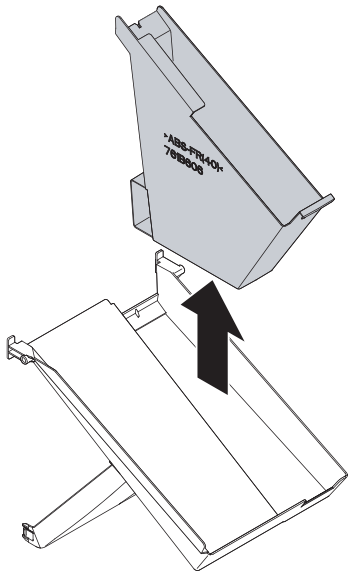

1. Lift to remove the exit tray waste bin.
2. Empty the exit tray waste bin.

NOTE: To keep your prints dust-free and to prevent paper jams, empty the waste bin each time you replace the paper.

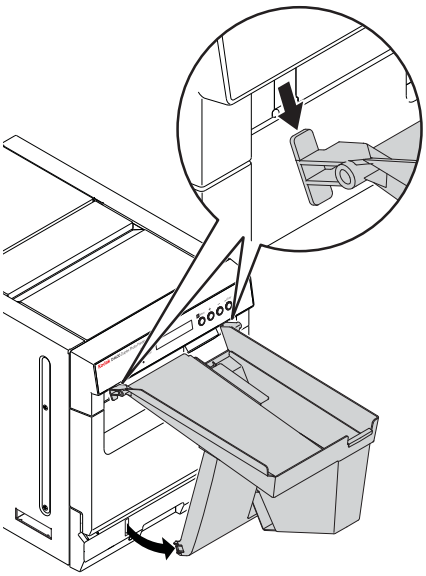

3. Lift the exit tray to remove it.

Removing the Front Door Waste Bin

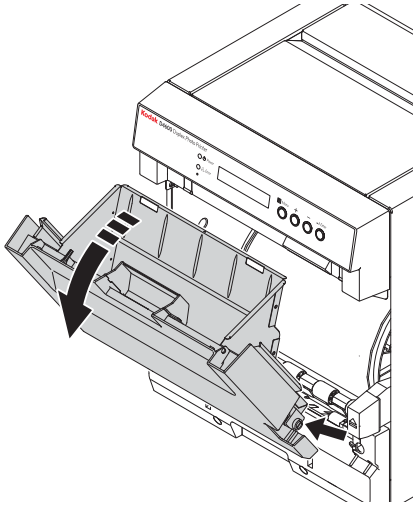

1. Remove the front door waste bin:
   a. Grasp the waste bin by the handle.
   b. Pull the waste bin towards you. Lift it up and out of the printer.
2. Empty the waste bin.

NOTE: To keep your prints dust-free and to prevent paper jams, empty the waste bin each time you replace the paper.

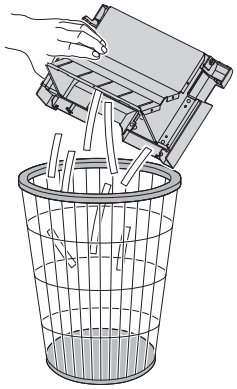

Cleaning the Exterior

1. Make sure that the printer power is off.
2. Remove the exit tray and exit tray waste bin (see "Removing the Exit Tray and the Exit Tray Waste Bin" on page 3-2).
3. Remove the front door waste bin (see "Removing the Front Door Waste Bin" on page 3-3).
4. Wipe the exterior of the printer, exit tray, and waste bins with a damp, lint-free cloth.
5. Insert the front door waste bin, exit tray, and exit tray waste bin (see "Installing the Front Door Waste Bin, Exit Tray, and Exit Tray Waste Bin" on page 1-2).

Cleaning the Filters

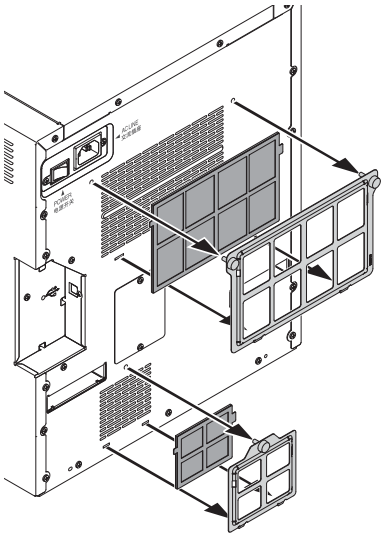

1. Loosen the thumb screws for both filters on the back of the printer.
2. Remove the filters from the frames.

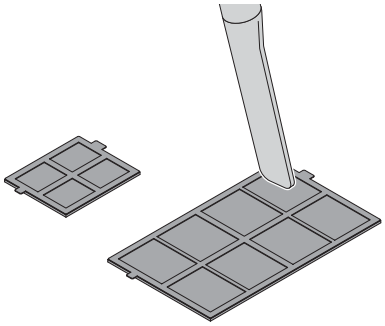

3. Carefully vacuum both sides of the filters.

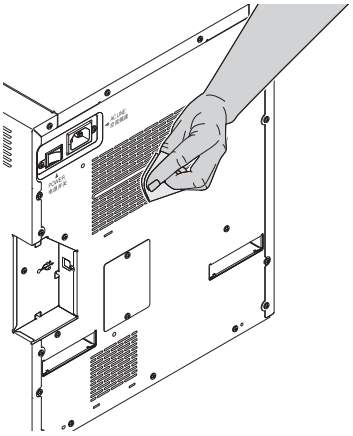

4. Gently wipe the back of the printer with a damp cloth.

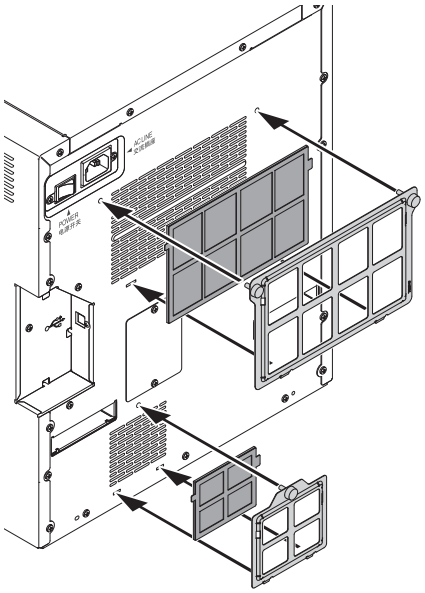

5. Insert the filters into the frames.
6. Install the filters:
   - Insert the filters on the back of the printer.
   - Tighten the thumb screws.

Cleaning the Thermal Print Head and the Peel Roller

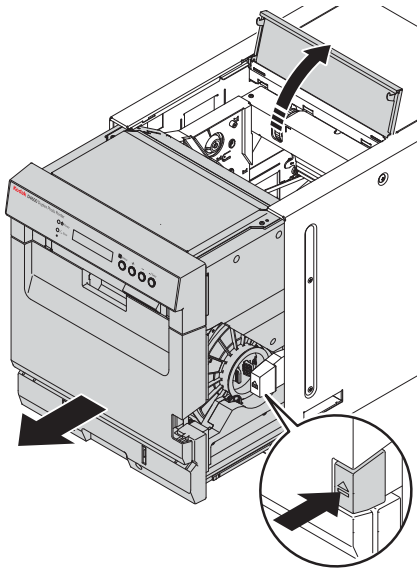

1. Make sure the power switch is turned off (○).
2. Remove the exit tray and the exit tray waste bin (see "Removing the Exit Tray and the Exit Tray Waste Bin" on page 3-2).
3. Open the front of the printer:
   - Press the release button.
   - Pull the front of the printer forward until it stops.
4. Open the top door of the printer.

CAUTION:
The thermal print head becomes extremely hot during normal operation. Wait approximately five minutes after you open the top cover before cleaning it. Fingerprints can damage the thermal head. Never touch it with your bare hands or fingers.

CAUTION: HOT!

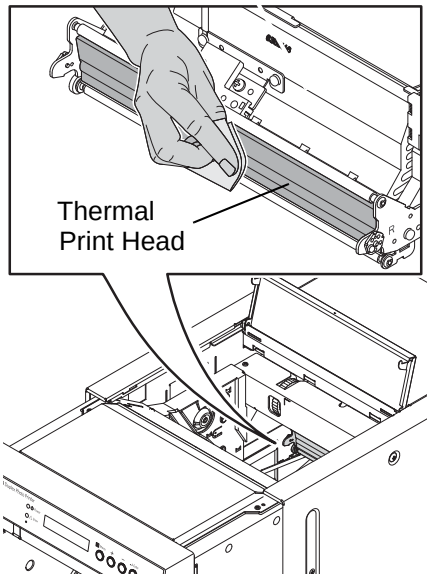

5. Remove a new alcohol pad from its packaging. Move the pad along the entire length of the thermal print head, in one direction only. When you clean the thermal head:
   - Apply firm, even pressure.
   - Make three passes along the thermal print head.
   - Use a clean part of the pad for each pass.

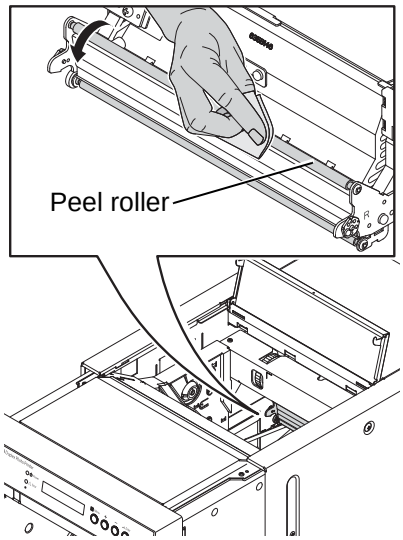

6. Use another clean alcohol pad to wipe the peel roller. Rotate the peel roller while wiping to clean all of the roller surface.
7. Allow the alcohol to dry completely (about five minutes) before you resume printing.

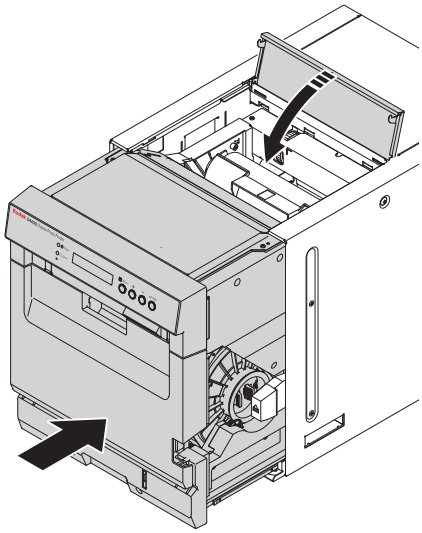

8. Close the top door.
9. Close the front of the printer.
10. Install the exit tray and exit tray waste bin (see "Installing the Front Door Waste Bin, Exit Tray, and Exit Tray Waste Bin" on page 1-2).

Cleaning the Platen and Pinch Rollers

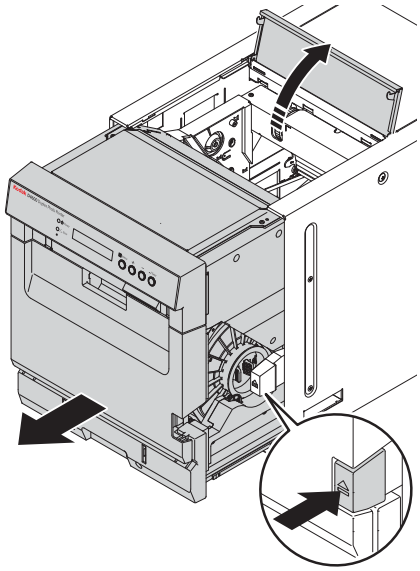

1. Make sure the power switch is turned off (○).
2. Remove the exit tray and the exit tray waste bin (see "Removing the Exit Tray and the Exit Tray Waste Bin" on page 3-2).
3. Open the front of the printer:
   - Press the release button.
   - Pull the front of the printer forward until it stops.
4. Open the top door of the printer.

⚠ CAUTION:
The thermal print head becomes extremely hot during normal operation. Wait approximately five minutes after you open the top cover before cleaning it. Fingerprints can damage the thermal head. Never touch it with your bare hands or fingers.

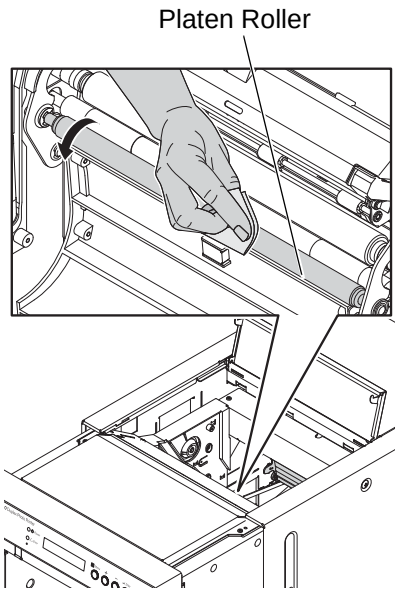

5. Remove an alcohol pad from its packaging. Wipe the rubber section of the platen roller with the pad.
6. Rotate the roller to clean the entire surface.
7. Allow the alcohol to dry completely (about five minutes) before you resume printing.

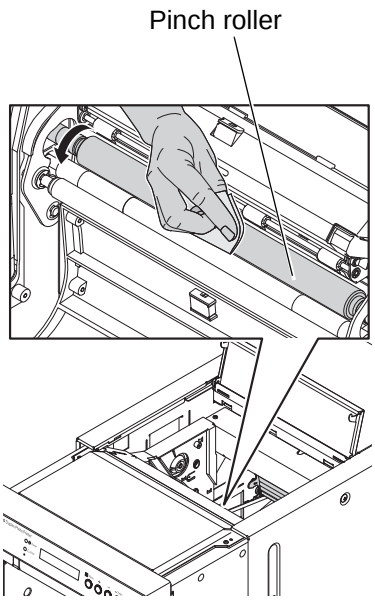

8. Remove a new alcohol pad from its packaging. Wipe the rubber section of the pinch roller with the pad.
9. Rotate the roller to clean the entire surface.
10. Allow the alcohol to dry completely (about five minutes) before you resume printing.

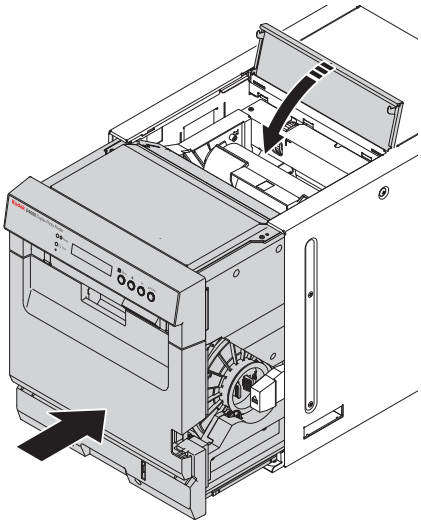

11. Close the top door.
12. Close the front of the printer.
13. Install the exit tray and exit tray waste bin (see "Installing the Front Door Waste Bin, Exit Tray, and Exit Tray Waste Bin" on page 1-2).

4 Troubleshooting

Problem	Description or Cause	Possible Solution
Sections of the image are not printed.	• Platen rollers are dirty. • Pinch rollers are dirty.	1. Clean the platen rollers (see page 3-8). 2. Clean the pinch rollers (see page 3-8).
Paper surface is scratched.	• Thermal print heads are dirty. • Debris is in the paper path.	1. Clean the thermal print heads (see page 3-6). 2. Clear any debris from the paper path (see page 4-4).
Prints have horizontal streaks. 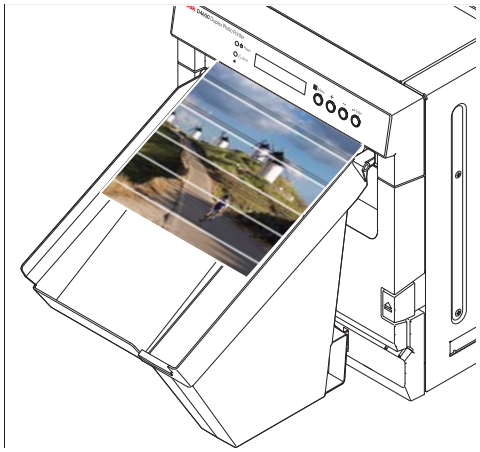	• Thermal print heads are dirty. • Peel rollers are dirty. • Platen rollers are dirty. • Pinch rollers are dirty.	1. Clean the thermal print heads, including the peel rollers (see page 3-6). 2. Clean the platen rollers (see page 3-8). 3. Clean the pinch rollers (see page 3-8).
Prints have vertical streaks. 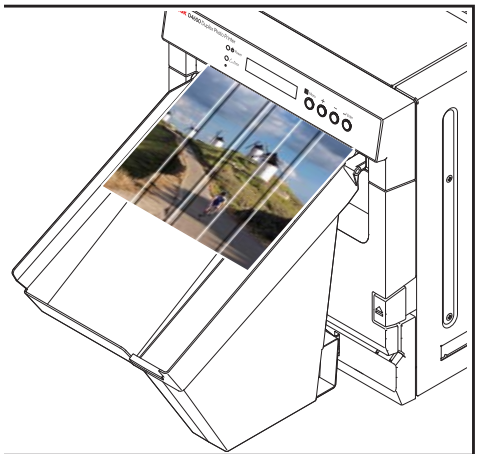	Thermal print heads are dirty.	Clean the thermal print heads (see page 3-6).
Prints have streaks made up of small dots.	Platen rollers are dirty.	Clean the platen rollers (see page 3-8).

Problem	Description or Cause	Possible Solution
Paper is skewed.	• Paper is not loaded correctly, or it is loose on the roll. • Debris is in the paper path. • Pinch rollers are dirty.	1. Make sure that the paper is loaded correctly and wound tightly onto the roll (see page 1-7). 2. Clear any debris from the paper path (see page 4-4). 3. Clean the pinch rollers (see page 3-8).
Paper edge is bent.	Debris is in the paper path.	Clear any debris from the paper path (see page 4-4).
An abnormal noise occurs during paper feeding.		
Computer does not recognize the printer.	USB cable is not connected correctly, or it is damaged.	Check that the USB cable is connected correctly and not damaged.
Data transfer stops and the operator panel displays **Data error**.		

Resolving Operator Panel Status/Error Messages

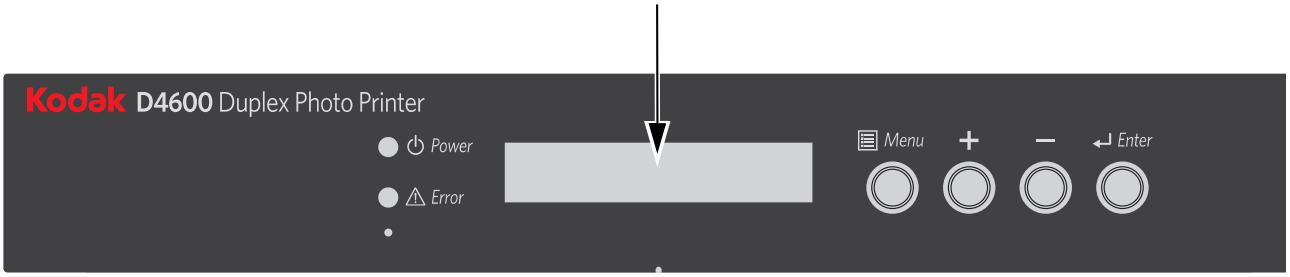

Refer to the following table to resolve errors that appear on the operator panel. If the error persists, contact KODAK Service and Support.

Message	Description or Cause	Possible Solution
Top Door Open	The top door is open.	Securely close the top door.
Paper Door Open	The paper door is open.	Securely close the paper door.
Incorrect Rib	The printer could not read the bar code on the ribbon, or the wrong type is loaded.	Check that the ribbon has a bar code, and/or replace it with the correct type (see page 1-5).
Ribbon Mismatch	The wrong ribbon is loaded.	Load the correct ribbon (see page 1-5).

Message	Description or Cause	Possible Solution
Ribbon Empty	The ribbon is empty.	Load (or reload) the ribbon (see page 1-5).
Paper Empty	The paper is empty or is not loaded correctly. Automatic loading failed.	Load (or reload) the paper (see page 1-7).
Load Paper	The paper is empty or is not loaded correctly.	Load (or reload) the paper (see page 1-7).
Take Out Paper	The printer detected the end of the paper and ejected the remainder of the paper.	Load new paper (see page 1-7).
Ready Loading	The printer is preparing to load paper.	No action is necessary.
Control Error	The printer has a specific problem that may require service.	Turn the printer off. After 10 or more seconds, turn the printer on and wait for it to warm up. If the error persists, contact KODAK Service and Support. Have available: • error code number. • printer model number and serial number (shown on the data plate on the back of the printer).
Mecha Error		
Sensor Error		
TempSensErr		
Paper Jam	The paper is jammed in the paper path.	Clear the paper jam from the paper path (see page 4-4), then reload the paper. If the error persists, turn the printer off and then on again.

Clearing a Paper Jam

If a **Paper Jam** message appears on the operator panel, follow this procedure on the printer.

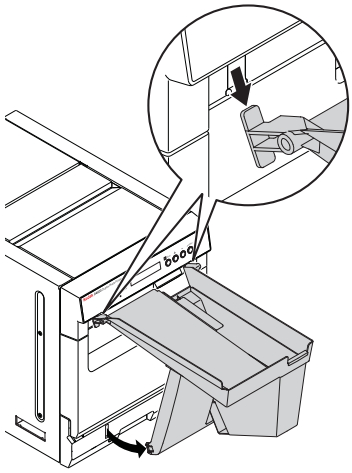

1. Make sure the power switch is turned on (**|**).
2. Remove the exit tray from the front of the printer.

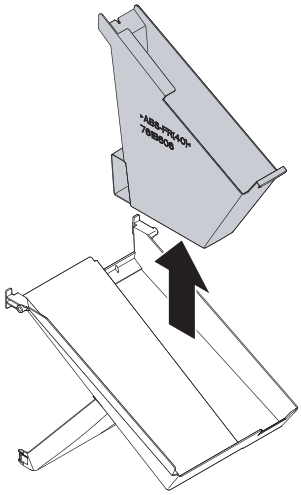

3. Remove and empty the exit tray waste bin.

NOTE: To keep your prints dust-free and to prevent paper jams, empty the waste bin each time you replace the paper.

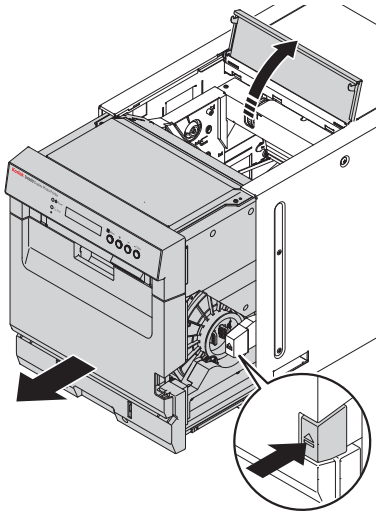

4. Open the front of the printer.
   - Press the release button.
   - Pull the front of the printer forward until it stops.
5. Open the top door of the printer.

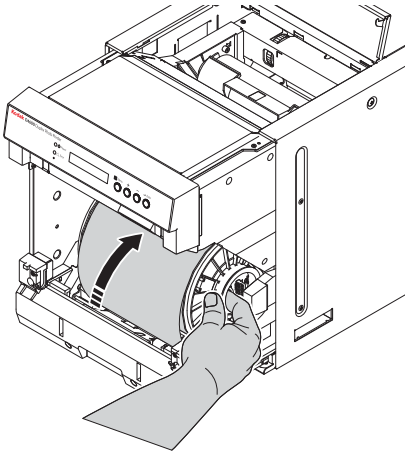

CAUTION:
To prevent damage to the printer, do not pull abruptly on the paper.

6. Manually rewind the paper onto the roll.

CAUTION: HOT
Thermal print head

CAUTION:
The thermal print head becomes extremely hot during normal operation, and fingerprints can damage it. Never touch the thermal print head.
Do not allow any objects to fall onto the thermal print head.

7. Wait approximately five minutes to allow the thermal print head to cool.

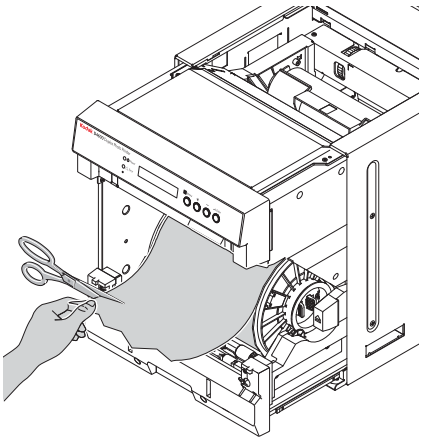

CAUTION:
Be careful not to damage or mark any rollers.

8. Cut off any damaged or printed areas of the paper.
9. Look inside the printer and carefully remove any pieces of paper.
10. Clean the platen and pinch rollers. See "Cleaning the Platen and Pinch Rollers" on page 3-8.
11. Load the paper. See "Loading the Paper" on page 1-7.
12. Insert the exit tray waste bin into the exit tray.
13. Install the exit tray.

Recovering from a Power Interruption

CAUTION:
If the printer loses power while printing, the printer stops with the thermal print heads positioned against the platen rollers. The platen rollers could become damaged if the thermal print heads are left in this position.

If a power outage occurs:

1. Make sure the power switch is turned on (**|**).
2. Remove the exit tray from the front of the printer.

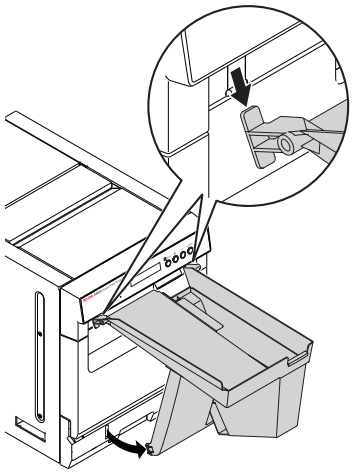

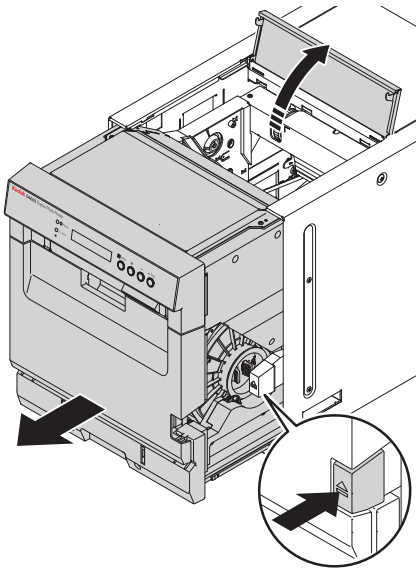

3. Open the front of the printer.
   - Press the release button.
   - Pull the front of the printer forward until it stops.
4. Open the top door of the printer.
5. When power is restored:
   a. Power cycle the printer.
   b. Follow the procedure for "Clearing a Paper Jam" on page 4-4.
   c. Send your print job again.

Appendix A: Additional Information

System Requirements

- Computer with WINDOWS XP SP3, WINDOWS VISTA, or WINDOWS 7 Operating System
- Minimum 1.0 GHz CELERON Microprocessor
- Minimum memory requirement is determined by your operating system
- Minimum 2 GB of available hard disk space
- USB High Speed (2.0) compliant host device

Printer Specifications

Dimensions, with casters	Width	33.66 cm (13.25 in.)
	Depth, with exit tray	78.74 cm (31 in.)
	Depth, without exit tray	50.48 cm (19.875 in.)
	Height	40 cm (15.75 in.)
Weight, without ribbon and paper		30 kg (66.14 lbs)
Operating environment	Temperature	15 to 35° C (59 to 95° F)
	Relative humidity	20 to 86% non condensing
Power voltage/frequency (auto detection in the prescribed range)		100 V to 240 V / 50 Hz to 60 Hz
Power consumption		Less than 5.0 Amps at 100 V AC or 2.5 Amps at 240 V AC
Print sizes		8 x 4 in. (20.3 x 10.2 cm) 8 x 6 in. (20.3 x 15.2 cm) 8 x 8 in. (20.3 x 20.3 cm) 8 x 10 in. (20.3 x 25.4 cm) 8 x 12 in. (20.3 x 30.5 cm)

Printer Supplies

Go to www.kodak.com/go/printerupdates for information on ordering supplies.

Paper and Ribbon

Paper and ribbon are sold separately.

IMPORTANT: *For best results, replace both the paper and ribbon at the same time. Used ribbon is safe for land-fill disposal. Do not recycle used ribbon.*

KODAK D4600S Duplex Photo Ribbon	
Catalog Number	177-0973
Contents	2 ribbons—25.4 cm (10 in.)
Capacity*	300 20.3 x 25.4 cm (8 x 10 in.) prints

KODAK D4600L Duplex Photo Ribbon	
Catalog Number	135-2459
Contents	2 ribbons—30.5 cm (12 in.)
Capacity*	250 20.3 x 30.5 cm (8 x 12 in.) prints

KODAK D4600 Photo Paper	
Catalog Number	163-8428
Contents	1 roll
Capacity*	300 20.3 x 25.4 cm (8 x 10 in.) prints 250 20.3 x 30.5 cm (8 x 12 in.) prints

* Paper and ribbon rolls contain material to make the stated print quantity. The paper roll contains a small amount of additional paper for leading edge and trailing edge waste.

Thermal Printer Cleaning Kit

Use the KODAK Thermal Printer Cleaning Kit when performing routine maintenance on the printer (see page 3-6).

KODAK Thermal Printer Cleaning Kit	
Catalog Number	172-1117
Contents	10 individually packaged alcohol pads

CAUTION:
Alcohol is a flammable liquid. It can cause eye irritation and dry skin. Wash your hands with soap and water following any maintenance procedures where you use alcohol pads.

Packing and Transporting the Printer

CAUTION:
The printer weighs approximately 30 kg (66.14 lbs). Use caution when moving the printer. Shipping the printer with paper and ribbon installed can cause damage to the printer.

1. Remove the paper and ribbon from the printer.
2. Remove the exit tray and the front door waste bin.
3. Repack the printer, front door waste bin, and exit tray in the original packing box. See the packing/unpacking instructions included with the box.

Getting Help

Help with your printer is available from the following sources:

- "Chapter 4 Troubleshooting" in this user's guide
- KODAK Service and Support

Appendix B: Safety and Regulatory Information

Important Safety Information

CAUTION:
Use of controls or adjustments or performance of procedures other than those specified in this manual may result in injury and/or damage to the printer.

- The power outlet should be easily accessible and installed near the printer.
- Position the power cable so that it cannot be pulled on or tripped over.
- Never allow the power cable to contact hot surfaces.
- The power outlet must be grounded. An ungrounded outlet can cause fire, electric shock, or harmful interference to nearby electrical devices.
- Use only the power cable provided with the printer.
- Do not operate the printer with a damaged power cable.
- Always unplug the power cable from the printer before cleaning or when the printer is not in use.
- If the printer has been dropped or damaged, make sure a qualified service person examines the printer before you use it.
- Do not block the filter openings on the printer cabinet.
- Do not expose the printer to moisture or water.
- Do not allow any foreign objects or liquids to fall or spill inside the printer. Fire or electric shock could result.
- The thermal print head becomes extremely hot during normal operation. Do not touch it.
- Alcohol pads are used to clean the thermal print head and other internal printer components. Consult the manufacturer's Safety Data Sheet prior to use. In case of emergency, use the contact telephone number listed in Section 1 of the Safety Data Sheet. For non-emergency information, email Kodak Alaris at "kes@kodak.com".

Safety Labels

Please observe the important safety warnings that are posted on the printer.

CAUTION:
SHOCK HAZARD. DO NOT OPEN.

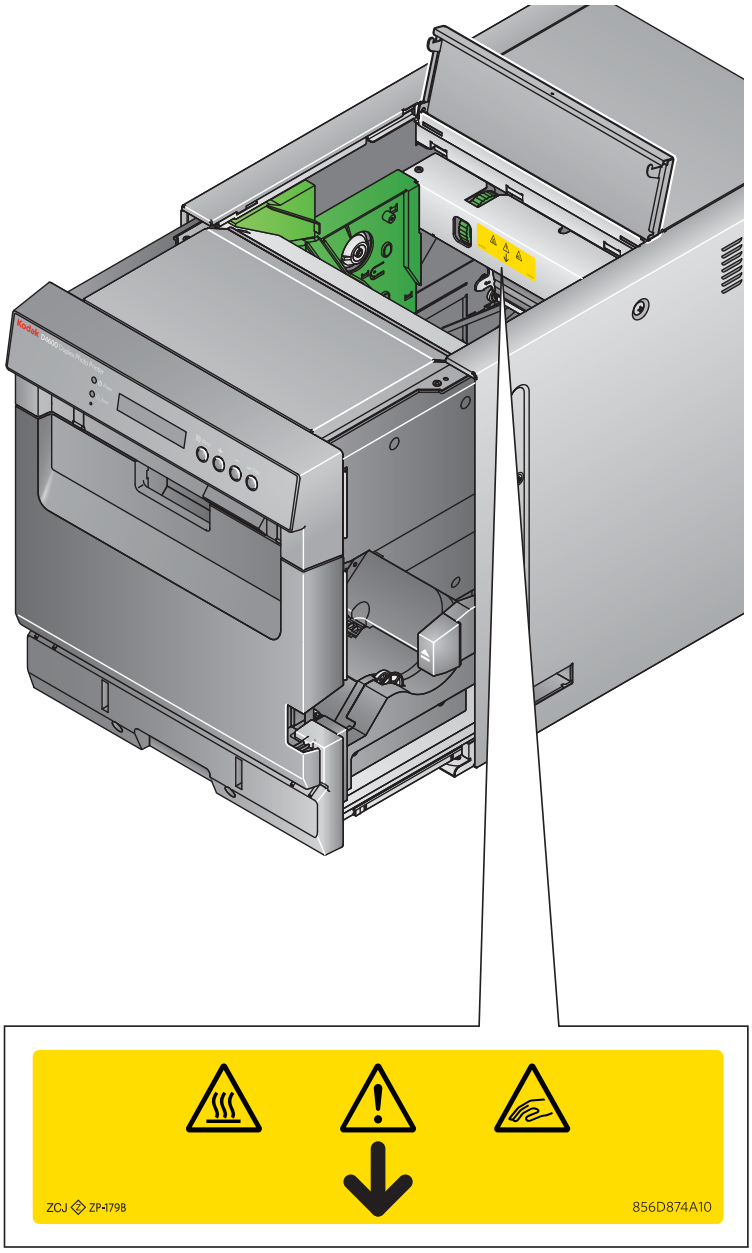

CAUTION:
HOT SURFACE—To prevent burns, use caution in these areas.

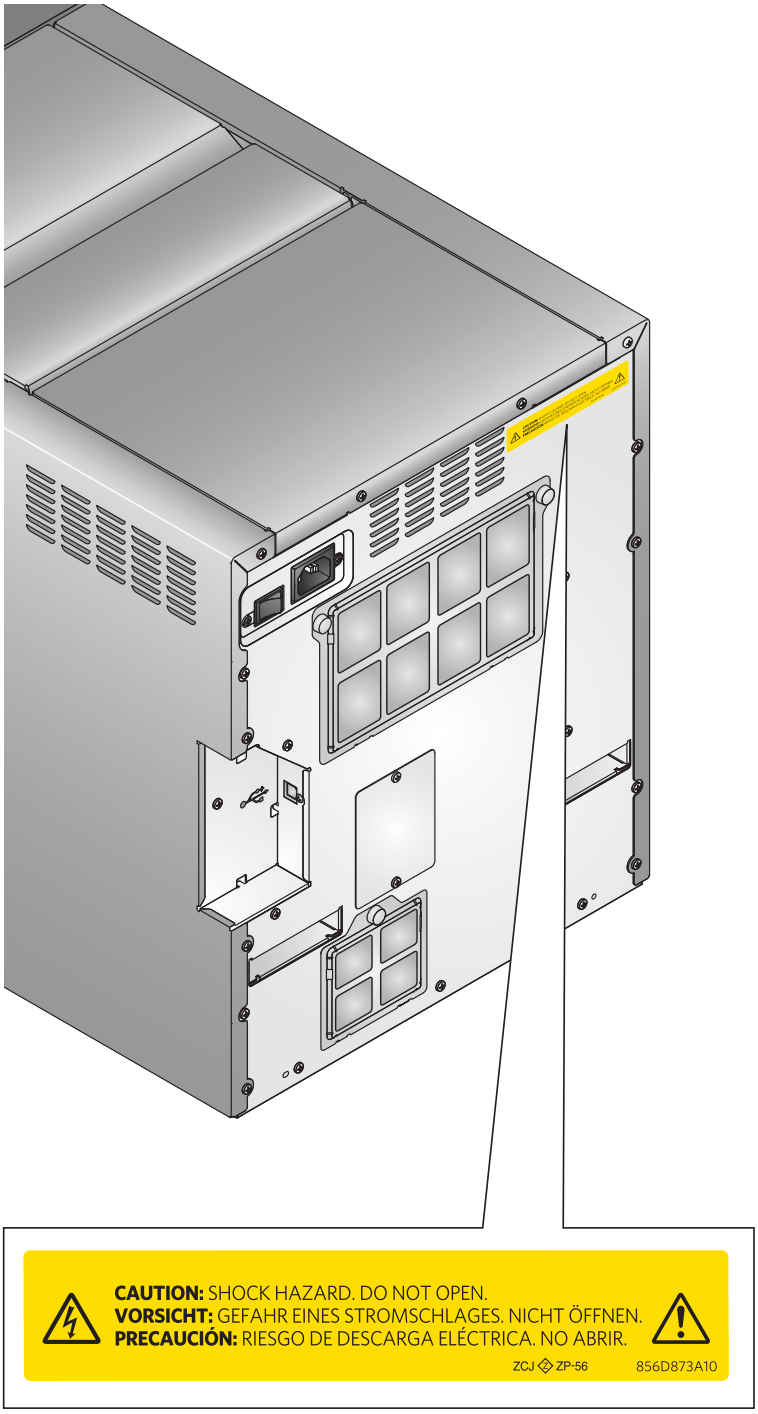

Regulatory and Safety Compliance

Safety

Complies with UL 60950-1
CAN/CSA C22.2 No. 60950-1
EN 60950-1
IEC 60950-1

Electromagnetic Compatibility (EMC)

NOTE: This equipment has been tested and found to comply with the limits for a Class A digital device, pursuant to part 15 of the FCC rules. These limits are designed to provide reasonable protection against interference when the equipment is operated in a commercial environment. This equipment generates, uses, and can radiate radio frequency energy and, if not installed and used in accordance with the instruction manual, may cause interference to radio communications. Operation of this equipment in a residential area is likely to cause interference in which case the user will be required to correct the interference at his or her own expense.

This device complies with Industry Canada licence-exempt RSS standard(s). Operation is subject to the following two conditions: (1) this device may not cause interference, and (2) this device must accept any interference, including interference that may cause undesired operation of the device. Le présent appareil est conforme aux CNR d'Industrie Canada applicables aux appareils radio exempts de licence. L'exploitation est autorisée aux deux conditions suivantes : (1) l'appareil ne doit pas produire de brouillage, et (2) l'utilisateur de l'appareil doit accepter tout brouillage radioélectrique subi, même si le brouillage est susceptible d'en compromettre le fonctionnement. Cet appareil numérique de la classe A est conforme à la norme NMB-003 du Canada.

Requirements of the R&TTE directive 1999/5/EC were met through compliance with the following:

- EN 55022
- EN 55024
- EN 61000-3-2
- EN 61000-3-3
- EN 300 330-2
- EN 301 489-1
- EN 301 489-3
- EN 62311

CAUTION:

This is a class A product. In a domestic environment this product may cause radio interference in which case the user may be required to take adequate measures.

"Changes or modifications not expressly approved by the party responsible for compliance could void the user's authority to operate the equipment."

Install and use the equipment according to the instruction manual.

이 기기는 업무용(A급) 전자파적합기기로서 판매자 또는 사용자는 이 점을 주의하시기 바라며, 가정외의 지역에서 사용하는 것을 목적으로 합니다.

声　明

此为 A 级产品，在生活环境中，该产品可能会造成无线电干扰。在这种情况下，可能需要用户对其干扰采取切实可行的措施。

Disposal

This product contains a small amount of lead in the solder on the circuit boards. Disposal of this material may be regulated due to environmental considerations. For disposal or recycling information, please contact your local authorities. In the USA, contact the Electronics Industry Alliance at www.eiae.org.
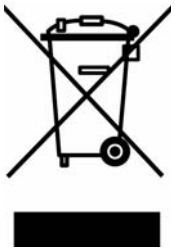
In the European Union, this symbol indicates that when the last user wishes to discard this product, it must be sent to appropriate facilities for recovery and recycling. Contact KODAK Service and Support or refer to www.kodak.com/go/recycle for additional information on the collection and recovery programs available for this product.