Hardware Installation Guide

Relay2 RA320 - Smart Access Point

Doc No.: PRDT-0055 Version:1.0 Date: 2020-02-12
Copyright© Relay2, Inc. 2020. All rights reserved.

Trademarks:

Relay2 logo is a trademark of Relay2, Inc. of US.

Company Headquarters:

1525 McCarthy Blvd. #209, Milpitas, CA 95035, USA
www.relay2.com
Phone: +1 408-380-0031

Product Overview:

The RA300 family is a cloud-managed Service-Ready Access Point (SR-AP) offering edge computing and storage capabilities with high-performance wireless access point integrated. It enables businesses to deliver superior venue experiences, enhance business operations, and create competitive advantages. The RA300 family consists of various models, including RA320 and RA340 to support various capacity and deployment needs. For more information about the RA300 family, refer to www.relay2.com.

PRDT-0055 © Relay2, Inc. 2020. All rights reserved.

Opening the Package

- Please ensure that all ordered optional accessories are included in separate accessory box.
- Please check the packaging list first. If there are any missing or broken parts, please contact the authorized distributor of Relay2, Inc.

Safety

- Read the Quick Installation Guide carefully before installation and power up.
- To avoid over-heating, make sure the AP allows for proper heat dissipation and leave enough room for air circulation.
- Do not directly touch the bottom of AP to avoid scalding. When the AP is in operation, depending on the environment temperatures, the surface temperature of back cover might get hot.
- Any unauthorized modification of the product structure and safety design is not allowed.

Before you start

- Before installation, signal detecting test can be used to determine the best installation position.
- Keep your body at least 20cm away from the AP during installation and operation.
- Install the AP at least 1M distance from any metal obstructions to avoid radio signal affected by metal shielding.
- To avoid radio interference, keep the device away from magnets or magnetic fields, ie: do not place near microwave, refrigerator ...etc.

Power Source Options

- The RA320 access point can be powered by using the external Relay2 AC Adapter, PoE Injector (both sold separately), or a third-party PoE+ switch.

Warranty

- Please provide the device model, MAC address and serial number shown on the tag of the side panel.
- The warranty does not cover product that has been opened without authorization from Relay2 Inc.
- Reasonable repair and shipping cost will be charged for product fault or damage caused by using non-Relay2 accessories or improper operation.

PRDT-0055 © Relay2, Inc. 2020. All rights reserved.

Package Content – RA320

Access Point

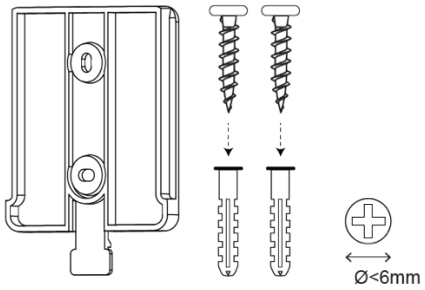

Wall-Mount Kit
M3.5 screws and anchors
for masonry

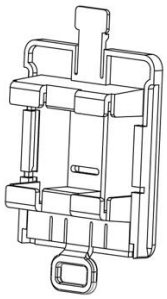

T-Rail Mount Kit

PRDT-0055 © Relay2, Inc. 2020. All rights reserved.

AP Overview:

Interfaces:

LED Indicators:

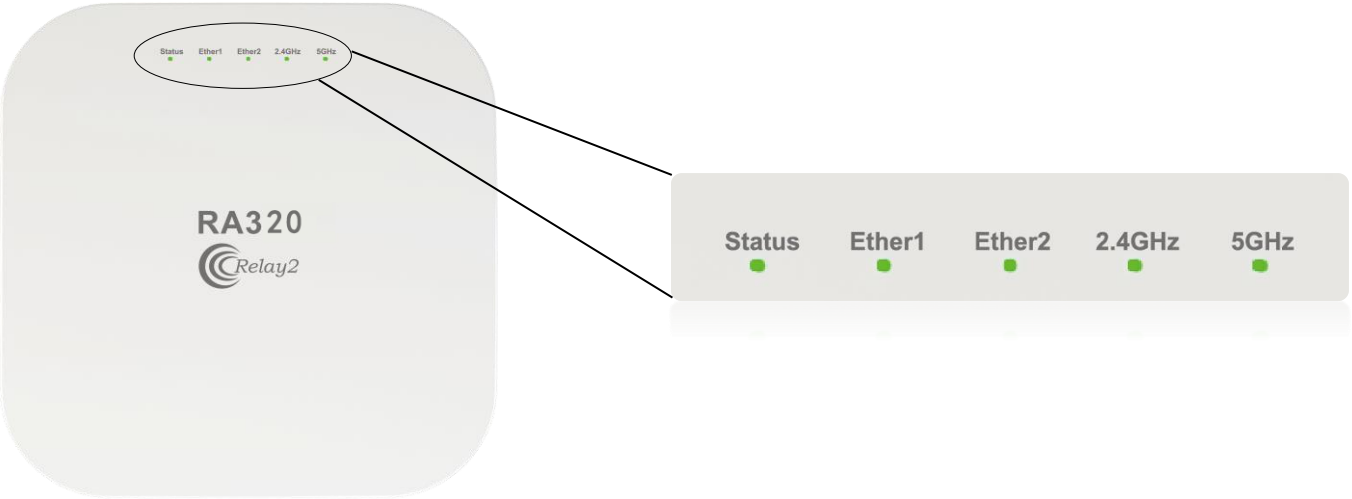

Kensington Lock Hard Point:

PRDT-0055 © Relay2, Inc. 2020. All rights reserved.

Wall Mount the AP

- Determine where the AP is to be placed and mark location on the surface for the two mounting holes. You may adjust the position with a level.

- Use the appropriate drill bit to drill two 4mm wide and 37mm deep holes and insert the screw anchors into the openings. Fasten the mounting plate with provided screws.

- Slide the AP into the wall mounting plate.

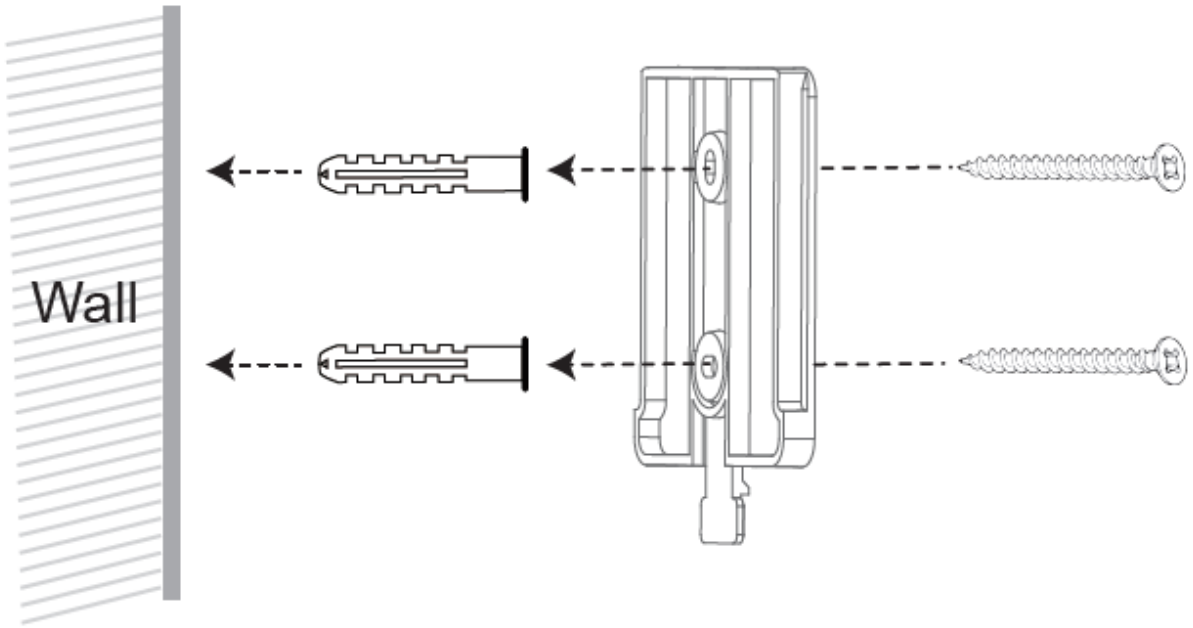

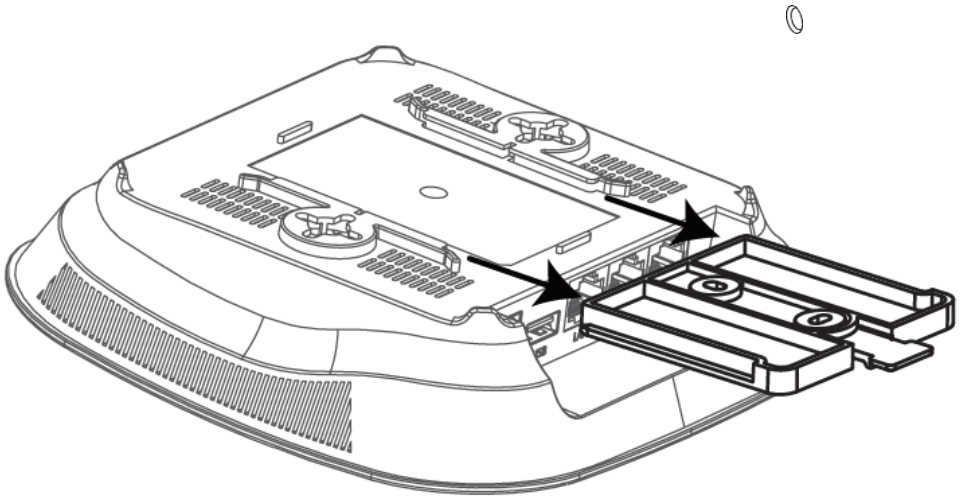

PRDT-0055 © Relay2, Inc. 2020. All rights reserved.

T-Rail Mount the AP

- Adjust the T-rail mount to the used T-rail size and fix the mounting bracket to the T-rail.

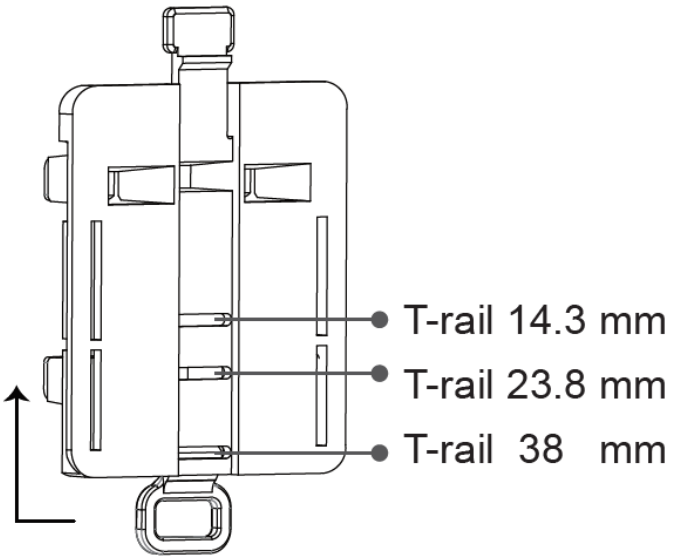

- Slide the AP into the T-rail mount

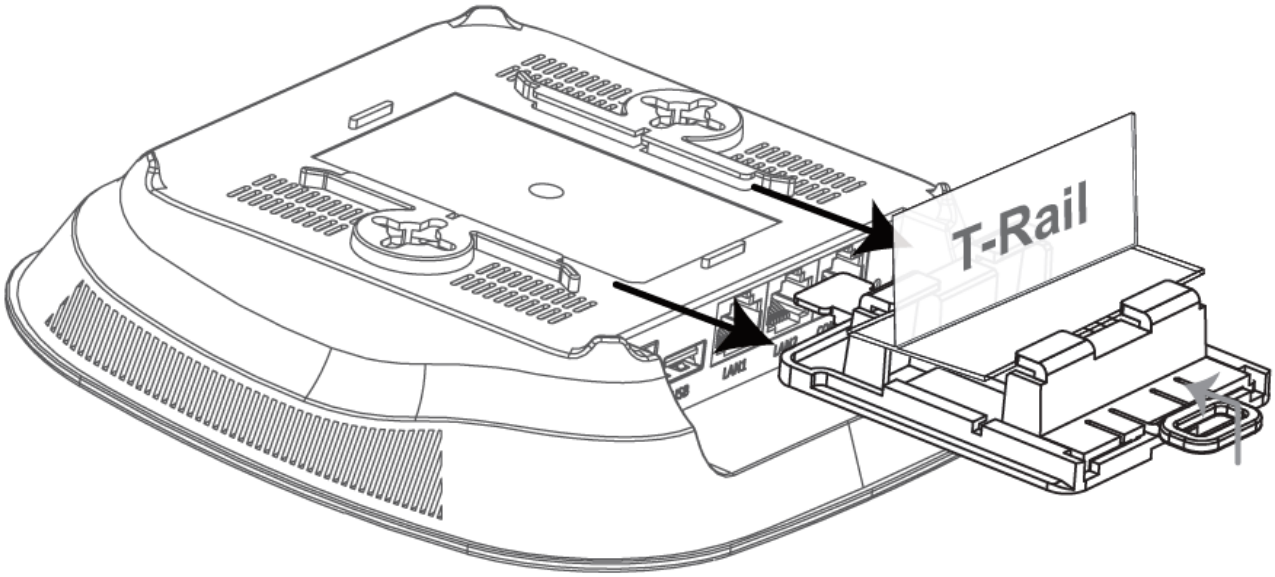

PRDT-0055 © Relay2, Inc. 2020. All rights reserved.

Kensington Lock – Security Feature

Attach a Kensington lock cable to the access point at the hard point on the side of the RA320.
Attach the other end of the cable to a secure location, such as a pipe or building fixture.

PRDT-0055 © Relay2, Inc. 2020. All rights reserved.

Verify RA320 Functionality

First check if the status LED is solid green. During first boot, it is highly likely that the AP is automatically updating its firmware, indicated by an amber blinking status LED. The status LED should turn solid green after the upgrade process has finished (normally within a few minutes). See LED indicator table below for more details.

Verify access point connectivity – use any 802.11 client device to connect to the RA320 AP and verify network connectivity using the client device web browser by going to a well-known web page.

Check network coverage and confirm good signal strength in the desired coverage area.

States	AP Status LED Display
State 1: Power On	Solid Green
State 2: R2OS starting	Amber Solid for 2 seconds
State 3: R2OS initializing	Amber blinking
State 4: Radio up and ready	Not affected
State 5: SCM connecting	Green blinking
State 6: CWCL connecting	Green fast blinking
State 7: AP up and running	Green solid
State 8: AP Image upgrade	Amber blinking
State 9: AP Radio down	Not affected

Table 1 RA320 LED booting states

PRDT-0055 © Relay2, Inc. 2020. All rights reserved.

FCC Disclaimer

§ 15.19 Labelling requirements.
This device complies with part 15 of the FCC Rules. Operation is subject to the following two conditions:
(1) This device may not cause harmful interference, and (2) this device must accept any interference received, including interference that may cause undesired operation.

§ 15.21 Information to user.
Any Changes or modifications not expressly approved by the party responsible for compliance could void the user's authority to operate the equipment.

§ 15.105 Information to the user.
Note: This equipment has been tested and found to comply with the limits for a Class B digital device, pursuant to part 15 of the FCC Rules. These limits are designed to provide reasonable protection against harmful interference in a residential installation. This equipment generates uses and can radiate radio frequency energy and, if not installed and used in accordance with the instructions, may cause harmful interference to radio communications. However, there is no guarantee that interference will not occur in a particular installation. If this equipment does cause harmful interference to radio or television reception, which can be determined by turning the equipment off and on, the user is encouraged to try to correct the interference by one or more of the following measures:

- -Reorient or relocate the receiving antenna.
- -Increase the separation between the equipment and receiver.
- -Connect the equipment into an outlet on a circuit different from that to which the receiver is connected.
- -Consult the dealer or an experienced radio/TV technician for help.
-

This equipment complies with FCC radiation exposure limits set forth for an uncontrolled environment.
This equipment should be installed and operated with minimum distance 20cm between the radiator & your body.

FCC ID: 2AAA9-RA320

PRDT-0055 © Relay2, Inc. 2020. All rights reserved.