DR301 Smartphone operated K-9

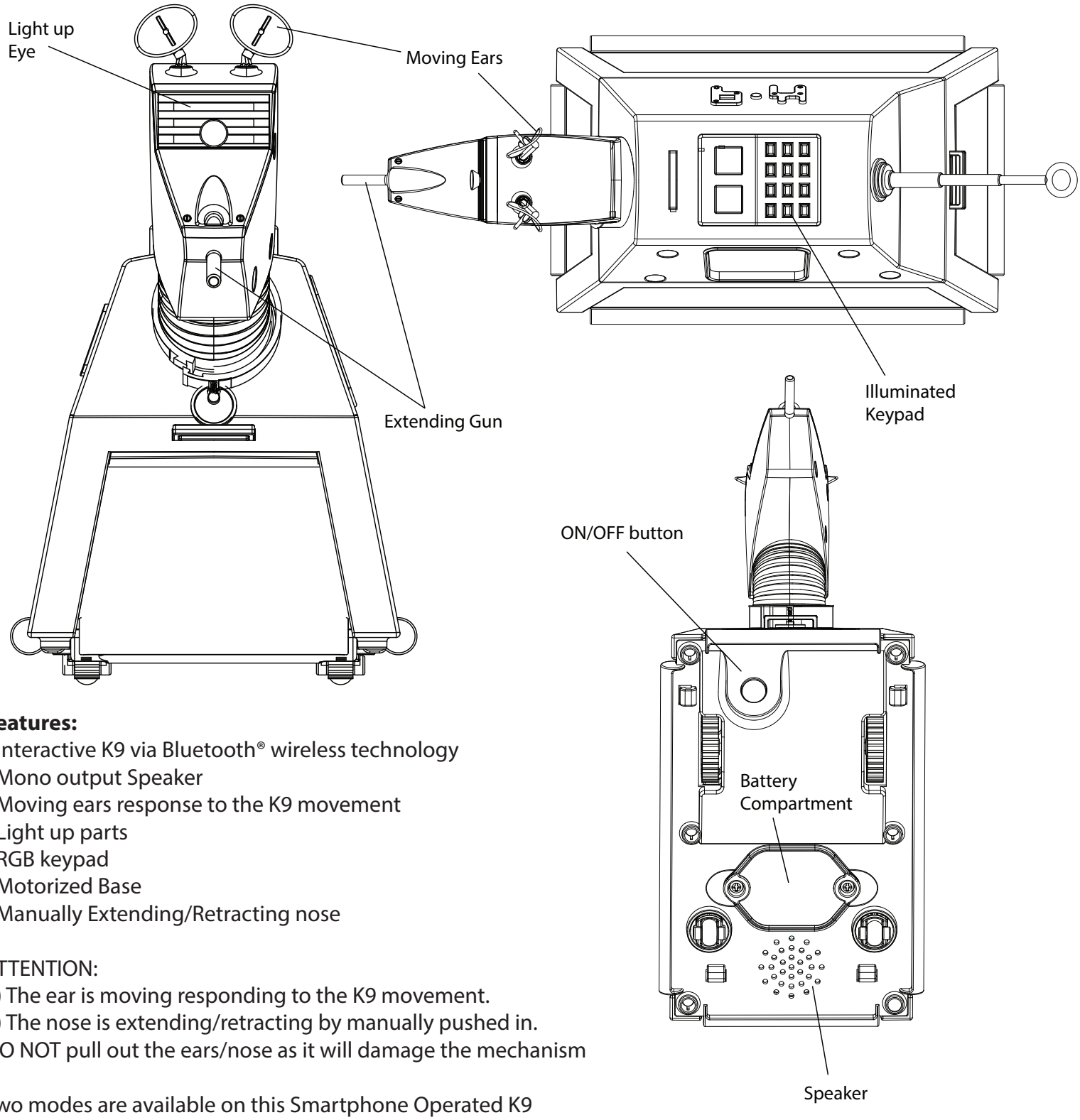

Features:
- Interactive K9 via Bluetooth® wireless technology
- Mono output Speaker
- Moving ears response to the K9 movement
- Light up parts
- RGB keypad
- Motorized Base
- Manually Extending/Retracting nose

ATTENTION:
1) The ear is moving responding to the K9 movement.
2) The nose is extending/retracting by manually pushed in.
DO NOT pull out the ears/nose as it will damage the mechanism

Two modes are available on this Smartphone Operated K9
Mode 1 : Remote Control by smartphone
Mode 2 : Static Speaker

Battery Information and Warning:
Battery require: 4 x 1.5V, AA battery (Not Included)

- We recommend the battery replacement is done under adult supervision.
- Non-rechargeable batteries are not to be recharged;
- Rechargeable batteries are only to be charged under adult supervision;
- Rechargeable batteries are to be removed from the product before being charged;

- Batteries must be inserted with the correct polarity;
- Exhausted batteries are to be removed from the product;
- The supply terminals are not to be short-circuited;
- Different types of batteries or new and used batteries are not to be mixed;
- Only batteries of the same or equivalent type as recommended are to be used.
- For longer battery life, it is recommend to use alkaline batteries.
- If the unit is not to be used for a prolonged period, such as a month of longer, remove the batteries to prevent possible leakage.

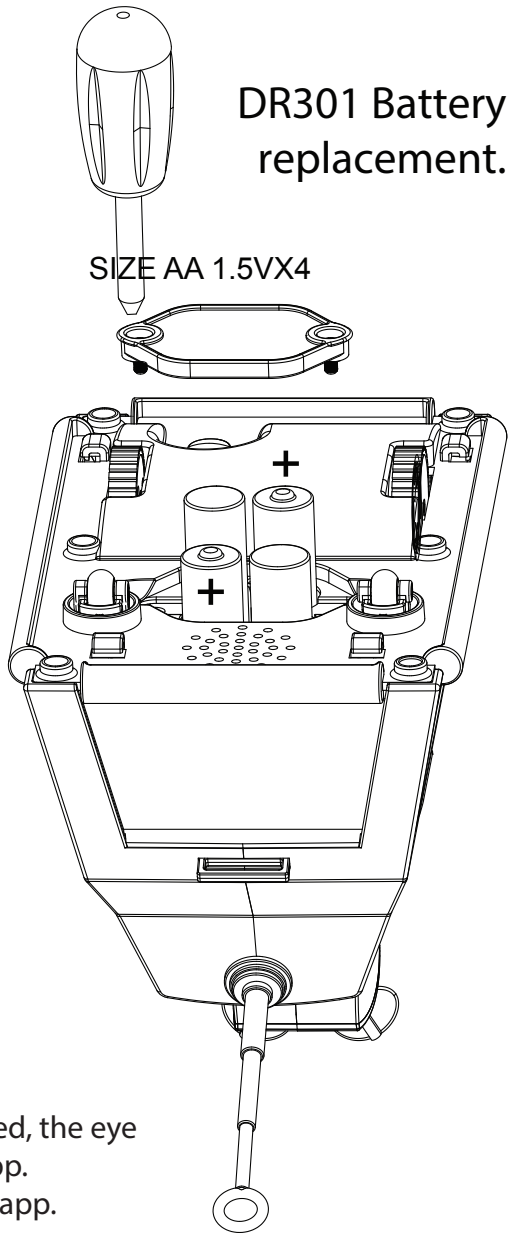

Battery installation:
1. Use a Philips screwdriver to unscrew the battery compartment cover located on the base of the unit.

2. Insert 4 x 1.5V, AA new batteries, ensuring the correct polarity as indicated on the sketch.

3. Replace the cover and tighten the screws.

Operating Instructions:
Enjoy the K9 with your Bluetooth® enabled smartphone.
1) To work with this product, please download our FREE application using the Google Play™ store app or App Store℠ with searching the keywords "DR301"

ANDROID APP ON Google play Available on the App Store

SEARCH "DR301"

2) Press and hold the On/Off button for 2 seconds
3) The device will be in the Mode 1.
4) Press once again will enter Mode 2.
5) Press once again will go back to Mode 1 and so on.
Press and hold On/Off Button for 2 seconds will turn off the K9.
Note : To save power, please turn off the unit if not in use.

Mode 1 : Remote Control by smartphone
The K9 should be connected with your Bluetooth® device. Once it is connected, the eye (RED LED) will light up and stop flashing. Now you can drive the K9 via our app.
For more detail of the app operation, please read the "SUPPORT" page in the app.
Note : Under mode 1, K9 will turn off if not in use for 3 minutes.

Mode 2 : Static Speaker
The keypad (RGB LED) will flash at 0.5Hz.
The K9 should be connected with your Bluetooth® device. In this mode, the unit cannot be controlled by the apps and used as a speaker.
Note : Under Mode 2, you have to turn off the unit by pressing the On/OFF button for 2 seconds.

How to pair up Bluetooth® device
1. Place the Bluetooth® device within 1 meter and power on the K9
2. Red eye light is flashing.
3. Perform the pairing procedure on your smartphone to detect the K9.
When the list of detected devices appears on the display of the Bluetooth® device, select "K9"
4. Build "K9" Bluetooth® connection from your smartphone. When the connection is made, the eye (red indicator) lights up.

Under the environment with electrostatic discharge, the product may malfunction. It requires user to reset the unit by replacing the batteries.

Technical Information
Bluetooth Specification: V2.1 + EDR, Bluetooth Profile: A2DP
Product Size : 255 mm x 105 mm x 175 mm
Battery : 4 x AA Battery

Trouble Shooting:

Q1 : **I cannot control the K9?**
A1 : Please check the batteries are inserted in correct polarity. Replace with new batteries if necessary.
A2 : The volume of your smartphone may set too low. Volume up your smartphone.
A3 : Make sure the Bluetooth on your smartphone is ON and paired up.
A4 : The K9 should be in Mode 1 for remote control. Please follow Operating Instructions section.
A5 : The Bluetooth® may be disconnected, follow the "How to pair up Bluetooth® device"
A6 : Restart both your smartphone and K9 and follow the "How to pair up Bluetooth® device".
A7 : Keep the K9/ device away from a microwave oven, wireless LAN etc
A8 : Make sure your smartphone and K9 within 10 meters and no solid objects in between

Q2 : **The K9 cannot be paired up via Bluetooth® wireless technology?**
A1 : The batteries power may be too low. Replace with new batteries if necessary.
A2 : The K9 may be connected with other device. Reactivate the K9 and make sure the red light is flashing.
A3 : Restart both your smartphone and K9 and make sure the Bluetooth® on your smartphone is power on.

Q3 : **How do I listen to music via the K9?**
A1 : K9 should be paired up with your smartphone and in the mode 2. To listen the music, start the media player in your smartphone and choose to Via Bluetooth.

Please keep this information for future reference.

BBC, DOCTOR WHO (word marks, logos and devices), TARDIS, DALEKS, CYBERMAN and K-9 (word marks and devices) are trade marks of the British Broadcasting Corporation and are used under licence. BBC logo © BBC 1996. Doctor Who logo © BBC 1996. TARDIS image © BBC 1963. Dalek image © BBC/Terry Nation 1963. Cyberman image © BBC/Kit Pedler/ Gerry Davis 1966. K-9 image © BBC/Bob Baker/Dave Martin 1977.

The Bluetooth® word mark and logos are registered trademarks owned by Bluetooth SIG, Inc. and any use of such marks by Zeon is under license. Other trademarks and trade names are those of their respective owners.

Google Play is a trademark of Google Inc.
App Store℠ is trademarks of Apple Inc., registered in the U.S. and other countries.

The item inside this package may vary from the photographs and/or illustrations.
For information on how to use this product please visit **www.zeonltd.co.uk/apps/drwho** or scan this QR code using your smartphone:

ZEON

12 MONTHS GUARANTEE:
If a fault develops write to us at:
Zeon Ltd, 39 Waterloo Road, London, NW2 7TT, UK.
Tel : 0208 208 1833.
This does not affect your statutory rights.

MADE IN CHINA

WARNING:
CHOKING HAZARD – Small parts.
Not for children under 3 years.

FCC Statement

This device complies with Part 15 of the FCC Rules. Operation is subject to the following two conditions: (1) this device may not cause harmful interference, and (2) this device must accept any interference received, including interference that may cause undesired operation.

Warning: Changes or modifications to this unit not expressly approved by the party responsible for compliance could void the user's authority to operate the equipment.

NOTE: This equipment has been tested and found to comply with the limits for a Class B digital device, pursuant to Part 15 of the FCC Rules. These limits are designed to provide reasonable protection against harmful interference in a residential installation. This equipment generates, uses and can radiate radio frequency energy and, if not installed and used in accordance with the instructions, may cause harmful interference to radio communications. However, there is no guarantee that interference will not occur in a particular installation. If this equipment does cause harmful interference to radio or television reception, which can be determined by turning the equipment off and on, the user is encouraged to try to correct the interference by one or more of the following measures:

- Reorient or relocate the receiving antenna.
- Increase the separation between the equipment and receiver.
- Connect the equipment into an outlet on a circuit different from that to which the receiver is connected.
- Consult the dealer or an experienced radio/ TV technician for help.

Item # : DR301
CAN ICES-3 (B)/NMB-3(B)

Imported and Distributed by:
UNDERGROUND TOYS
Underground Toys
8685 Miralani Drive, Suite 300
San Diego, CA 92126
Tel : +1 (619) 702 2023
Fax : +1 (858) 689 6881
For more information on Doctor Who gifts and toys, please visit
www.underground-toys.com