EnzyTek
EnzyTek Technology , Inc.

EnzyTek Technology, Inc.
7F, No. 35, Hsueh Fu Rd., Hsinchu 300,
Taiwan, R.O.C.
TEL：886-3-573-6708 FAX： 886-3-573-8749

BTA-C1010-3M

(V05)

Issued date: April 17, 2018

EnzyTek
EnzyTek Technology , Inc.

EnzyTek Technology, Inc.
7F, No. 35, Hsueh Fu Rd., Hsinchu 300,
Taiwan, R.O.C.
TEL：886-3-573-6708 FAX： 886-3-573-8749

EnzyTek Bluetooth® Low Energy Module With PCB Antenna

BTA-C1010-3M (V05)

OVERVIEW

- Highly integration BT 4.1 Low Energy Class II module, CSR CSR1010 + Memory + Filter + X'Tal + PCB Antenna.
- Wireless communications module conforming to Bluetooth Version 4.1.
- UART, SPI interfaces available to various applications.
- 5 GPIO ports available for user's application.
- 3 Analog IO ports available for user's application.

- BT Chipset : CSR CSR1010
- Standards : Bluetooth 4.1 Low Energy.
- Frequency : 2402 ~ 2480 MHz
- Antenna Gain : -0.98 dBm
- RX Sensitivity : 84 dBm (min)
- Range : > 10 m (line-of-sight at open space)
- Memory : EEPROM (512K bits)
- Operation Voltage : 1.8V ~ 3.6V
- Dimension : 18 x 13 x 2.2 (max) mm^3 (L×W×H)
- Environmental Range : Operation Temperature: 0~+85°C, Relative humidity : 0~95%

EnzyTek Technology, Inc.
7F, No. 35, Hsueh Fu Rd., Hsinchu 300,
Taiwan, R.O.C.
TEL：886-3-573-6708 FAX： 886-3-573-8749

System Block Diagram

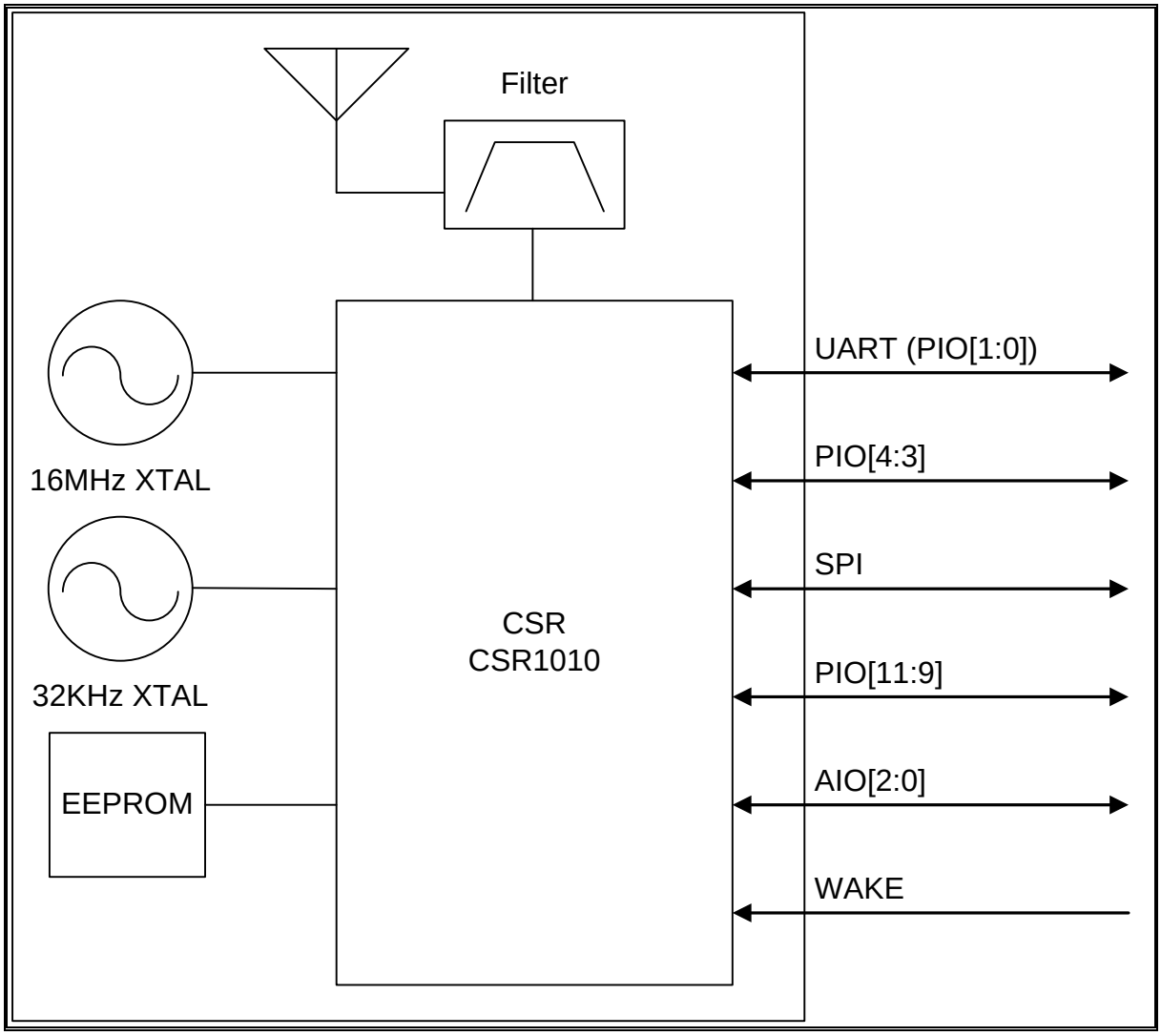

EnzyTek
EnzyTek Technology , Inc.

EnzyTek Technology, Inc.
7F, No. 35, Hsueh Fu Rd., Hsinchu 300,
Taiwan, R.O.C.
TEL：886-3-573-6708 FAX： 886-3-573-8749

Pinout Diagram / Dimension

Unit : mm

Note: Please contact EnzyTek to get the detail footprint of the module to do the PCB design.

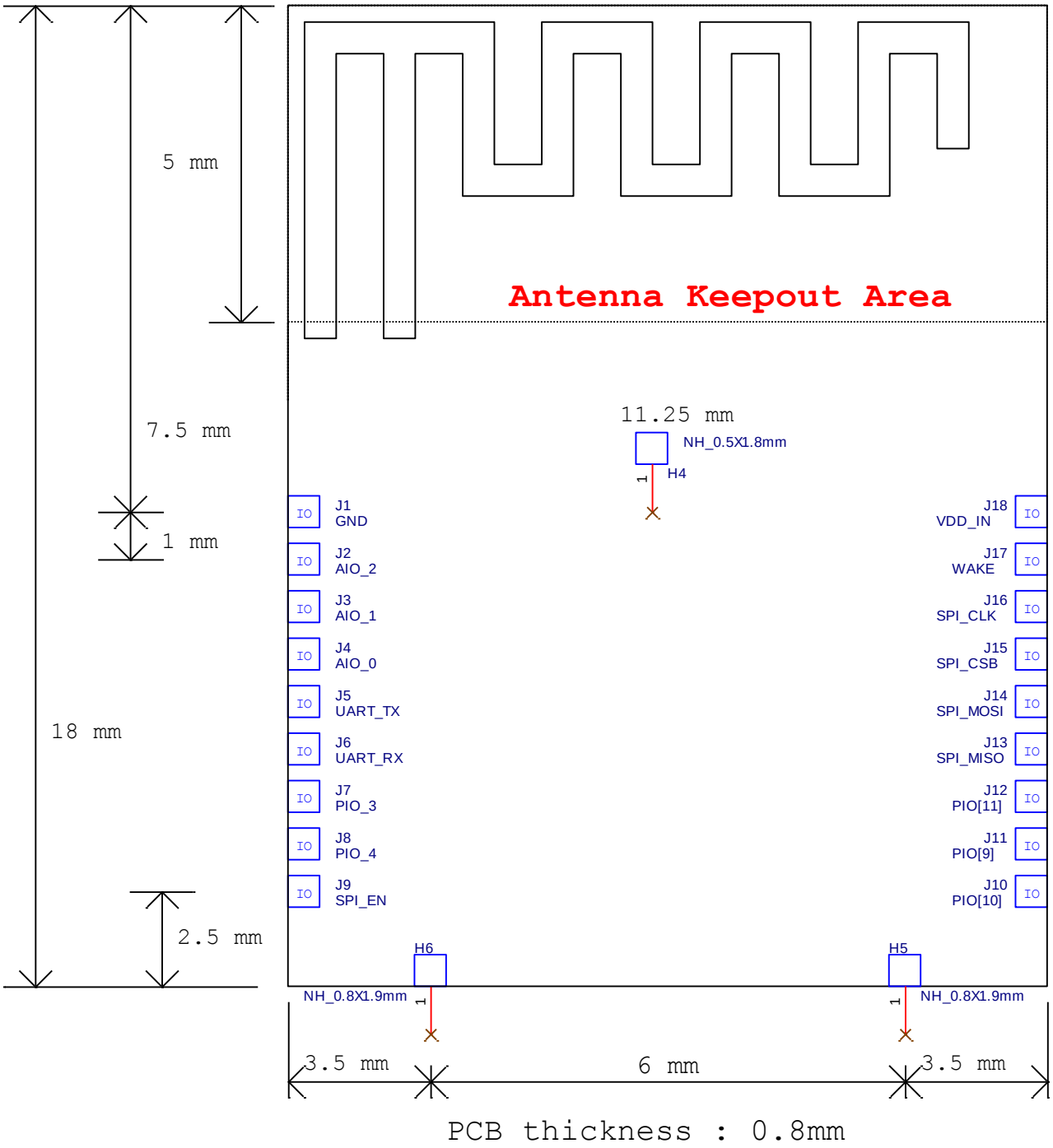

PCB thickness : 0.8mm

EnzyTek Technology, Inc.
7F, No. 35, Hsueh Fu Rd., Hsinchu 300, Taiwan, R.O.C.
TEL：886-3-573-6708 FAX： 886-3-573-8749

I/O PIN LISTING

Pin No.	Pin Name	Type	Description
J1	GND	Power	Ground
J2	AIO_2	Analog bi-directional	Programmable input/output line
J3	AIO_1	Analog bi-directional	Programmable input/output line
J4	AIO_0	Analog bi-directional	Programmable input/output line
J5	UART_TX (PIO_0)	CMOS output, tri-state, with weak internal pull-up	UART data output t, optional PIO0 which is defined by FW.
J6	UART_RX (PIO_1)	CMOS input with weak internal pull-down	UART data input, optional PIO1 which is defined by FW.
J7	PIO_3	Bi-directional with programmable strength internal pull-up/down	Programmable input/output line
J8	PIO_4	Bi-directional with programmable strength internal pull-up/down	Programmable input/output line
J9	SPI_EN	Input with internal pull-down	Enable SPI interface for debugging, NC.
J10	PIO_10	Bi-directional with programmable strength internal pull-up/down	Programmable input/output line
J11	PIO_9	Bi-directional with programmable strength internal pull-up/down	Programmable input/output line
J12	PIO_11	Bi-directional with programmable strength internal pull-up/down	Programmable input/output line
J13	SPI_MISO	CMOS output, tri-state, with weak internal pull-down	Serial Peripheral Interface data output
J14	SPI_MOSI	CMOS input with weak internal pull-down	Serial Peripheral Interface data input
J15	SPI_CSB	CMOS input with weak internal pull-up	Chip select for Synchronous Serial Interface active low
J16	SPI_CLK	CMOS input with weak internal pull-down	Serial Peripheral Interface clock
J17	WAKE	Input has no internal pull-up or pull-down, use external pull-down.	Input to wake the module from hibernate or dormant.
J18	VDD_IN	Power	3.3V input

EnzyTek Technology, Inc.
7F, No. 35, Hsueh Fu Rd., Hsinchu 300,
Taiwan, R.O.C.
TEL：886-3-573-6708 FAX： 886-3-573-8749

Electrical Characteristics

Absolute Maximum Ratings :

	Min.	Typ.	Max.	Unit
Supply Voltage	-	-	3.6	V
Storage Temperature	-40	-	85	^{o}C

Recommend Operation Conditions :

	Min.	Typ.	Max.	Unit
Supply Voltage	1.8	-	3.6	V
Operating Temperature	0	-	85	^{o}C

Input/Output Terminal Characteristics :

	Min.	Typ.	Max.	Unit
Digital (UART, PIO)				
V_{IL} Input Voltage Low	-0.4	-	+0.4	V
V_{IH} Input Voltage High	0.7xVDD	-	VDD+0.4	V
V_{OL} Output Voltage Low, (I_O is 4mA)	-	-	0.4	V
V_{OH} Output Voltage High, (I_O is -4mA)	0.75xVDD	-	-	V

EnzyTek Technology, Inc.
7F, No. 35, Hsueh Fu Rd., Hsinchu 300,
Taiwan, R.O.C.
TEL：886-3-573-6708 FAX： 886-3-573-8749

Radio Characteristics

VCC = 3.3V

	Min	Typ	Max	Limits(BLE SPEC)	Unit
Output Power					
Max Power	4			<10	dBm
Min Power	-20			>-20	dBm
Peak to Average		0		<3	dBm
Carrier drift					
Fn	-150		150	<=150	kHz
Drift rate	-20		20	<20	kHz/50us
Max Power	-50		50	<50	kHz
Modulation Characteristic					
F1avg','F1max'	225		275	225<= <=275	kHz
F2avg','F2max'	185			>=185	kHz
F1/F2 Ratio		0.8		>=0.8	
Sensitivity (-88dBm)					
Frame Error Rate	0		30.8	<=30.8(-70dBm)	%
PER Integrity					
Frame Error Rate	50		65.4	50<= <=65.4	%
Max Input Power					
Frame Error Rate		0		<=30.8(-40dBm)	%

EnzyTek Technology, Inc.
7F, No. 35, Hsueh Fu Rd., Hsinchu 300,
Taiwan, R.O.C.
TEL：886-3-573-6708 FAX： 886-3-573-8749

Current Consumption

HW	BTA-C1010-3M	
FW version	F-Serial_Port-v003	
FW configuration	Role	Gatt Server, device side
	Service	SPS Service
	Baud Rate	2400
	Default Power	Scale 0
BT BLE Host	iPhone 4S (ios5)	
Current Meter	Fluke 189	

	Min.	**Avg.**	**Max.**
Power On No connection	5.93 uA	6.79 uA	39.90uA
Power On advertising	202 uA	365 uA	567 uA
Connected No Data Transfer	15 uA	69 uA	143 uA
Connected TX Data/sec (from module to host)	17 uA	184 uA	1210 uA
Connected TX Data/500ms (from module to host)	17 uA	275 uA	1213 uA

EnzyTek
EnzyTek Technology , Inc.

EnzyTek Technology, Inc.
7F, No. 35, Hsueh Fu Rd., Hsinchu 300,
Taiwan, R.O.C.
TEL：886-3-573-6708　FAX：　886-3-573-8749

PCB Layout Guide

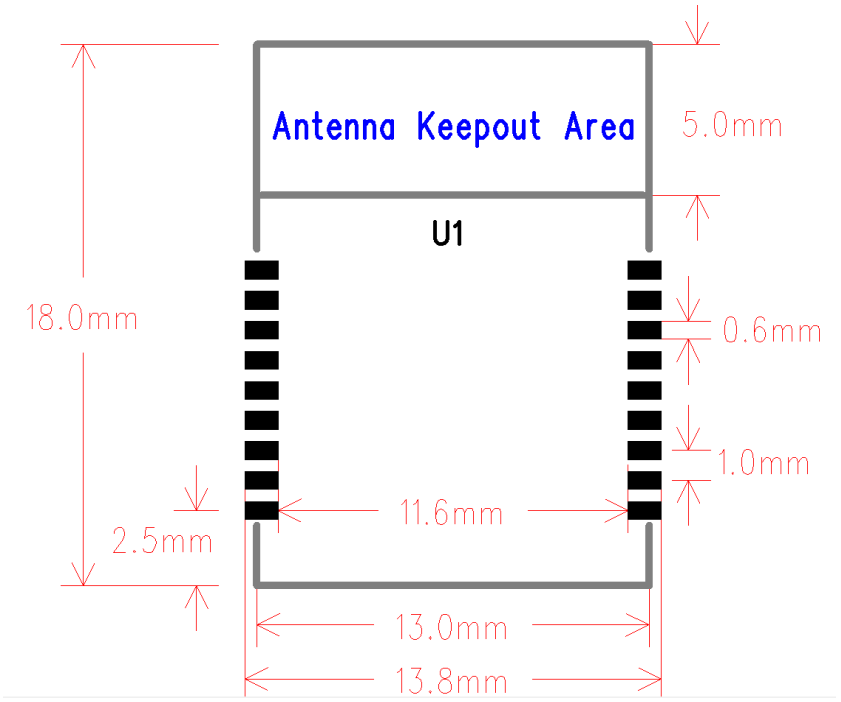

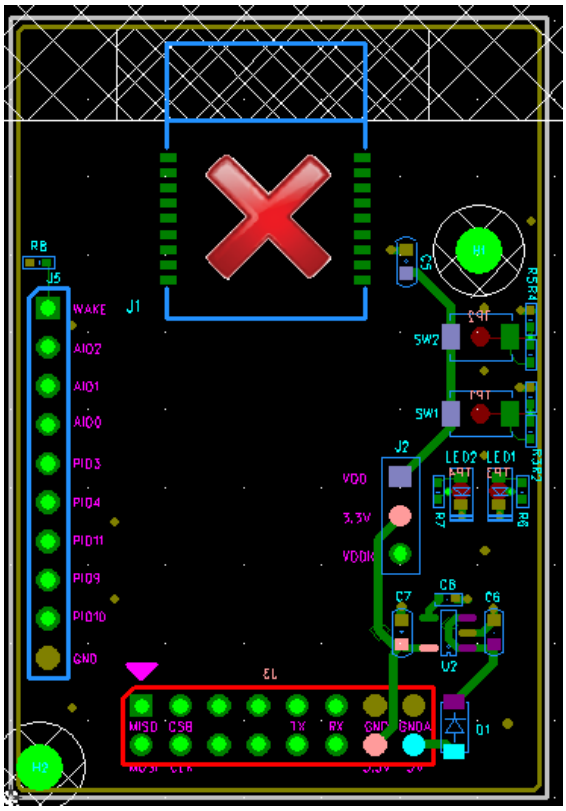

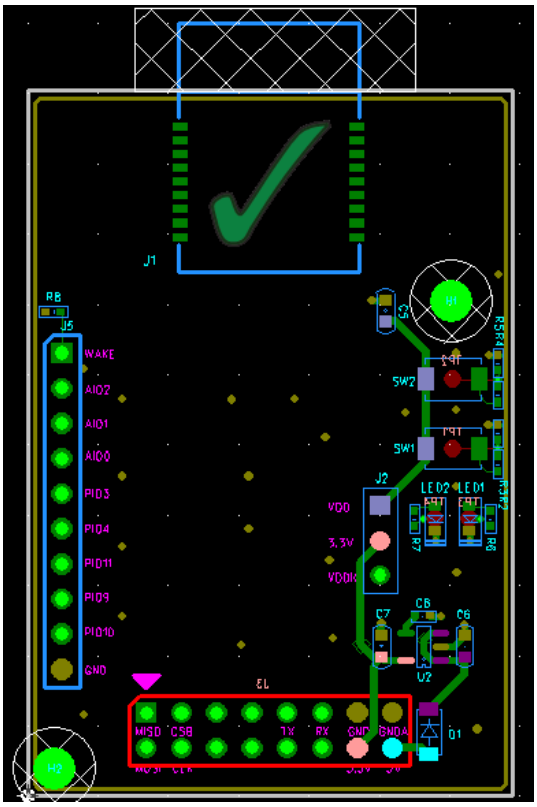

EnzyTek Technology, Inc.
7F, No. 35, Hsueh Fu Rd., Hsinchu 300,
Taiwan, R.O.C.
TEL：886-3-573-6708 FAX： 886-3-573-8749

Application Schematic

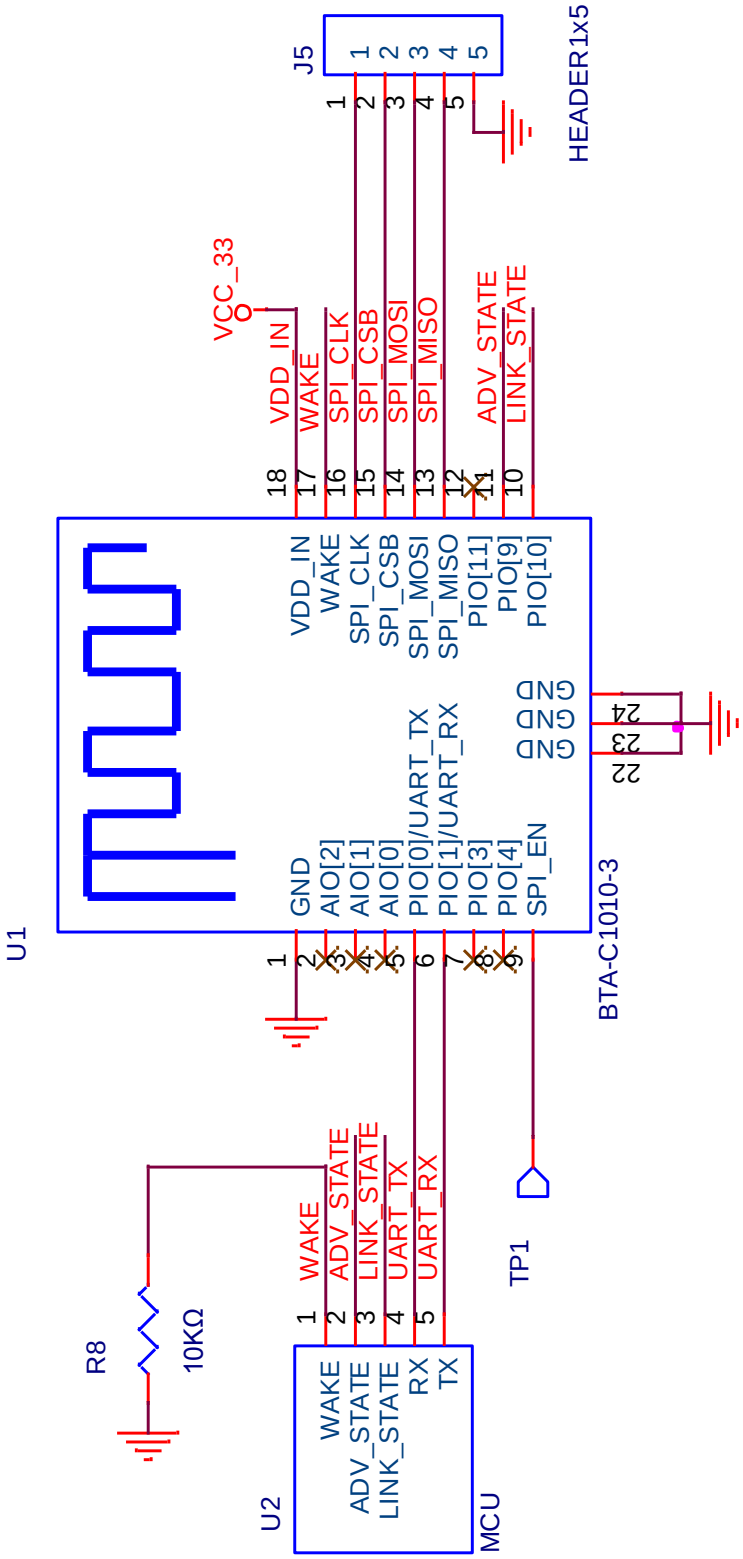

EnzyTek Technology, Inc.
7F, No. 35, Hsueh Fu Rd., Hsinchu 300,
Taiwan, R.O.C.
TEL：886-3-573-6708 FAX： 886-3-573-8749

Antenna Test Report

Test Setup

Free Space - Front View

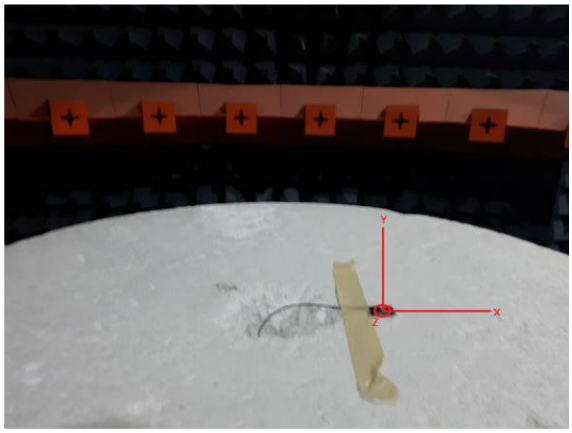

Free Space - Side View

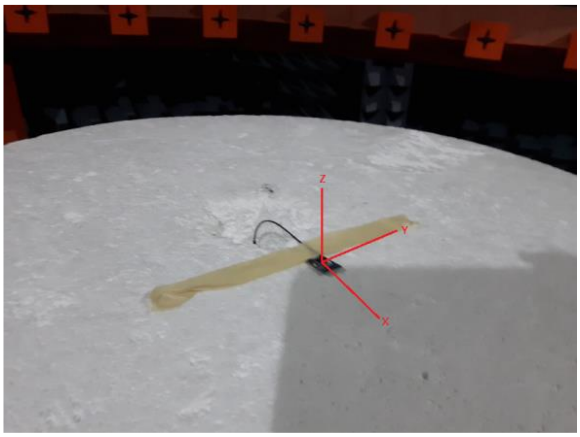

Antenna Gain and Efficiency

EnzyTek Technology, Inc.
7F, No. 35, Hsueh Fu Rd., Hsinchu 300,
Taiwan, R.O.C.
TEL：886-3-573-6708 FAX： 886-3-573-8749

AN24-PIFA-2			
Freq(MHz)	Peak. dBi	Efficiency	Average . dBi
2400.00	-0.98	18.58%	-7.31
2410.00	-1.05	17.95%	-7.46
2420.00	-1.15	17.42%	-7.59
2430.00	-1.36	16.66%	-7.78
2440.00	-1.43	15.94%	-7.98
2450.00	-1.55	15.10%	-8.21
2460.00	-1.87	14.04%	-8.53
2470.00	-2.29	12.76%	-8.94
2480.00	-2.63	11.73%	-9.31
2490.00	-3.02	10.77%	-9.68
2500.00	-3.46	9.81%	-10.08

Antenna 3D Plot Matrix

All plots in this section show the total EIRP (EIRPθ + EIRPφ) with the +x-axis pointing out of the page, +y-axis pointing right, and +z-axis pointing up.

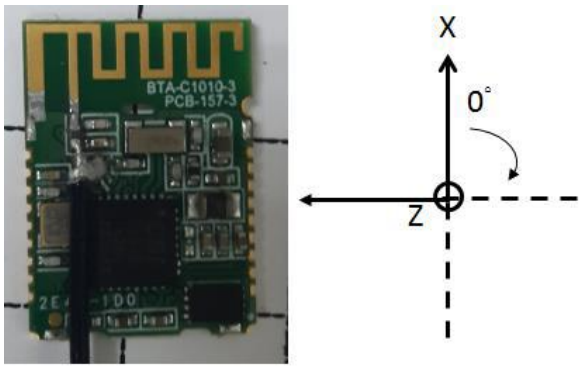

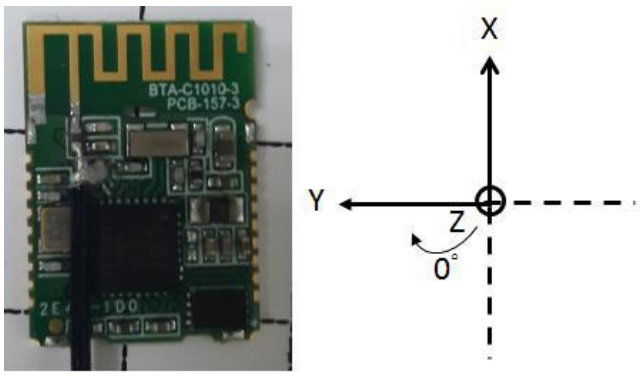

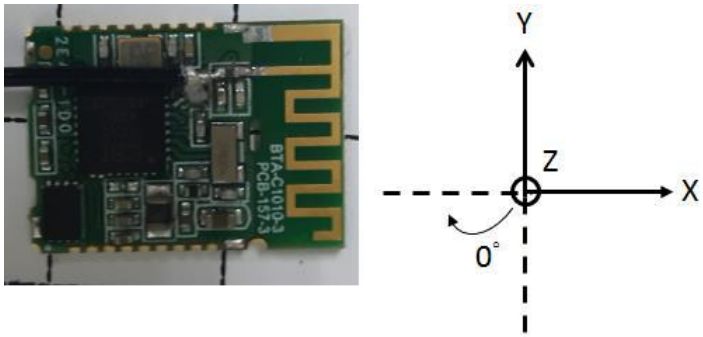

Free Space

EnzyTek Technology, Inc.
7F, No. 35, Hsueh Fu Rd., Hsinchu 300,
Taiwan, R.O.C.
TEL：886-3-573-6708 FAX： 886-3-573-8749

EIRP (2450 MHz) - 3D

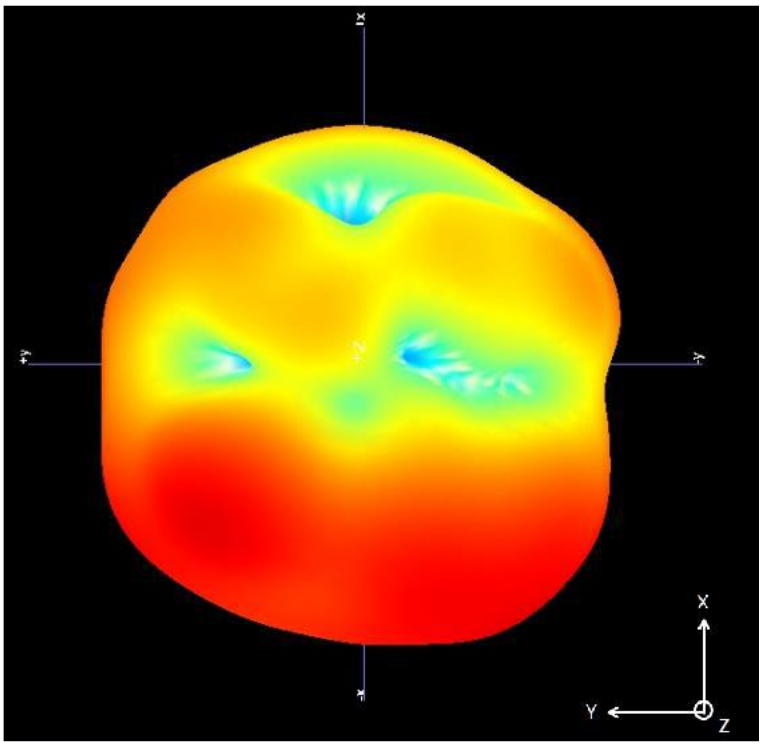

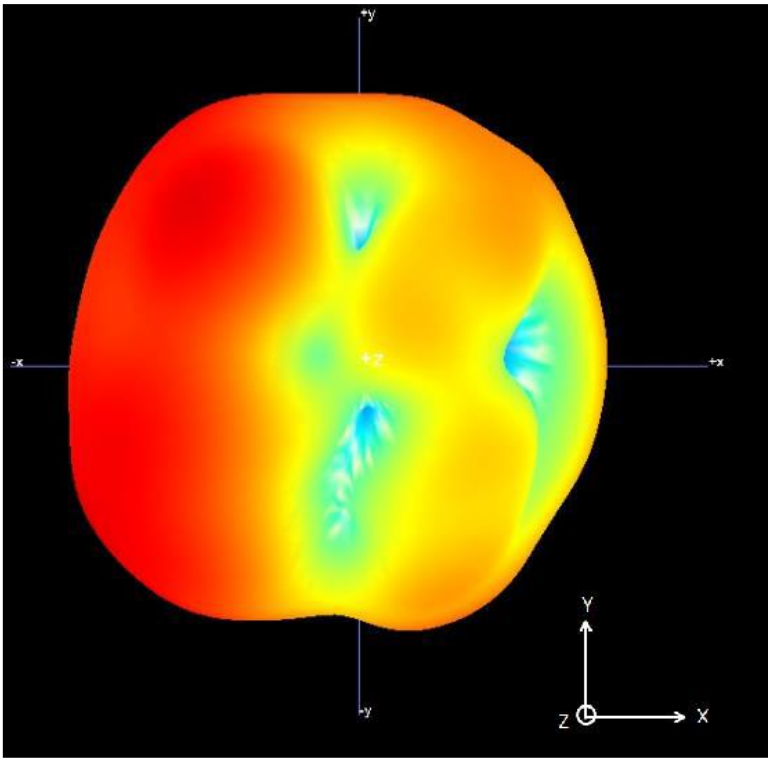

Free Space

EnzyTek Technology, Inc.
7F, No. 35, Hsueh Fu Rd., Hsinchu 300,
Taiwan, R.O.C.
TEL：886-3-573-6708 FAX： 886-3-573-8749

EIRP (2450 MHz) – XY cut

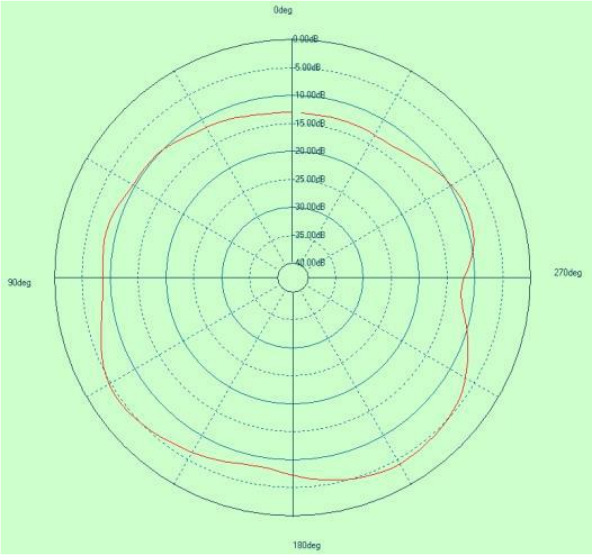

Free Space

EIRP (2450 MHz) – XZ cut

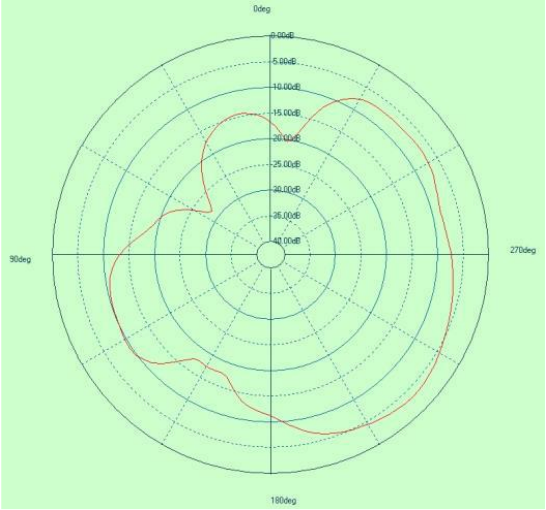

Free Space

EIRP (2450 MHz) – YZ cut

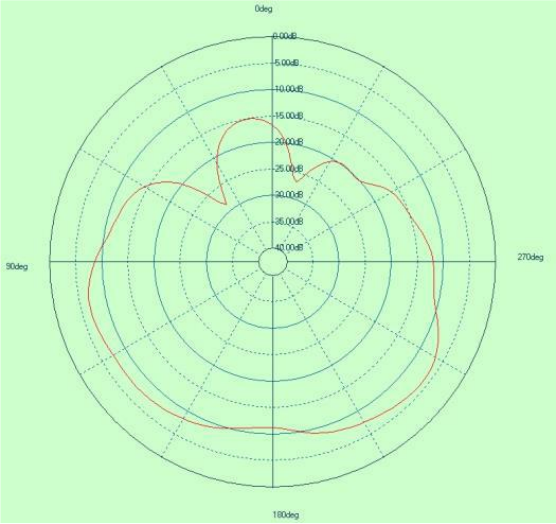

EnzyTek Technology, Inc.
7F, No. 35, Hsueh Fu Rd., Hsinchu 300,
Taiwan, R.O.C.
TEL：886-3-573-6708 FAX： 886-3-573-8749

FCC Warning

This transmitter module is authorized only for use in device where the antenna may be installed such that 20cm may be maintained between the antenna and users. The final end product must be labeled in a visible area with the following: "Contains FCC ID: 2AABGC1010-3M".

Information for the OEMs and Integrators

The following statement must be included with all versions of this document supplied to an OEM or integrator, but should not be distributed to the end user.

1) This device is intended for OEM integrators only.
2) Please see the full Grant of Equipment document for other restrictions.

This device complies with part 15 of the FCC Rules. Operation is subject to the following two conditions: (1) This device may not cause harmful interference, and (2) this device must accept any interference received, including interference that may cause undesired operation.

NCC Warning

根據低功率電波輻射性電機管理辦法 ：
第十二條 經型式認證合格之低功率射頻電機，非經許可，公司、商號或使用者均不得擅自變更頻率、加大功率或變更原設計之特性及功能。
第十四條 低功率射頻電機之使用不得影響飛航安全及干擾合法通信；經發現有干擾現象時，應立即停用，並改善至無干擾時方得繼續使用。前項合法通信，指依電信法規定作業之無線電通信。低功率射頻電機須忍受合法通信或工業、科學及醫療用電波輻射性電機設備之干擾。