Instruction Manual

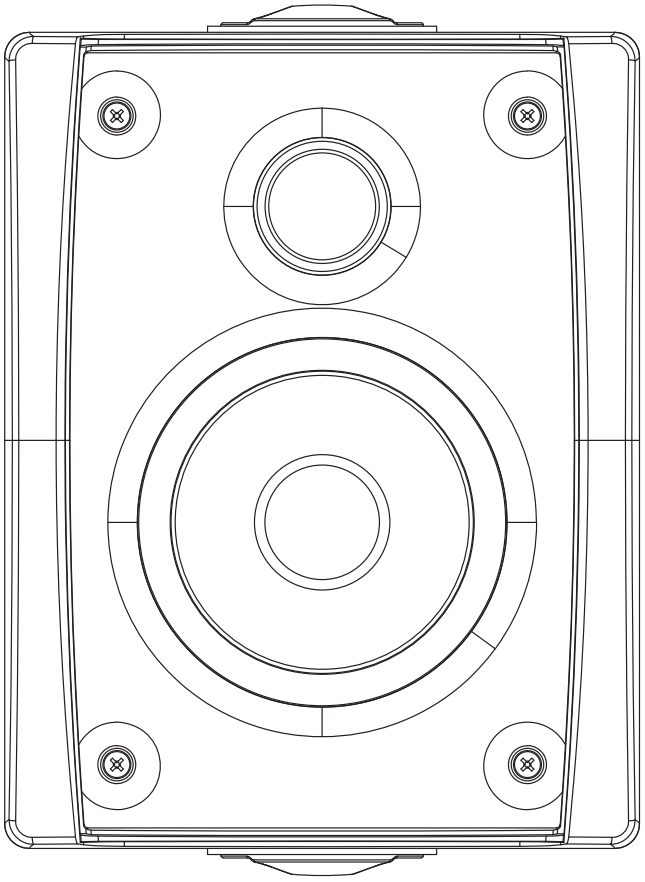

Atlantic
TECHNOLOGY

Table of Contents

2 **Unpacking the Speakers**
3 **Description**
Speaker Placement
4 **Mounting Your Speakers**
5 **Connecting Your Speakers**
6-7 **Connecting**
8 **Painting Your Speakers**
Care of Your Speakers
9 **Model AW-WS100, AW-WS200, AW-WS300 functions**
10-11 **Using Your AW-WS100, AW-WS200, AW-WS300 As A SKAA Receiver**
12 **SKAA cmd**
13 **Trouble Shooting Guide**
14 **Specifications**
15 **Warranty**

For Future Reference

Record the serial number and date of purchase for each speaker here. The serial number is found on the speaker terminal panel on the back of the enclosure.

Serial Number _____

Date of Purchase _____

The contents of this manual are Copyright © 2020 by Atlantic Technology International, Corp., and may not be duplicated or reproduced by any means, whether physical, electronic or otherwise without prior written consent from Atlantic Technology International, Corp.

Atlantic Technology and the Atlantic Technology logo are registered trademarks of Ace Result LLC.

Specifications are those in effect at the time of printing. As part of our ongoing program of continuous product improvement, Atlantic Technology reserves the right to change specifications or appearance at any time without notice or obligation to modify existing product.

Model
All Weather Speakers

Thank you for choosing Atlantic Technology products. Your new speaker's components are precision-crafted to give you years of enjoyable, trouble-free service. This manual covers the Atlantic Technology 100, 200, 300, serial of All Weather Speakers.

IMPORTANT: *Although it may seem like asking for driving directions, please take a few moments to read all of this booklet. It has many helpful tips and ideas on properly setting up and using your system. We promise that if you take the time to read and follow these tips youll get better system performance and more enjoyment.*

The AW-WS100, AW-WS200, AW-WS300, offer performance and versatility to the music and movie enthusiast. The speakers can be connected via both traditional speaker wire to your source equipment or wirelessly to other SKAA enabled products. SKAA® is a wireless audio standard, which proven by professional's in live music performance, creates an independent Hi-Fi audio superhighway in your home free from shortcomings of Wi-Fi® and Bluetooth® such as complexity, range, lip-sync latency, inter-speaker time alignment, sound quality, dropouts and interference. SKAA can simultaneously multi-room cast high-fidelity 16 bit, 48 kHz audio to four additional SKAA products up to 150 feet away. Atlantic Technology has a line of SKAA-enabled multiroom products which includes the FS-252 active wireless bookshelf speaker system, STA-200 2-channel wireless amplifier, Gatecrasher3 sound bar, as well surround speakers and outdoor speakers. The AW-WS100, AW-WS200 and AW-WS300, are an ideal complement to any of these SKAA products.

Unpacking the Speakers

Use care when unpacking the speakers. Remember to save all packing materials until you are certain that the speakers have suffered no damage in shipment. If you find such damage, either visible or internal, contact your dealer immediately.

If you can do so, save the carton, packing pieces, and plastic bags that came with your speakers. They will be useful in case you move or have to ship your speakers for any reason.

Description

Model AW Weather Speakers

Congratulations on your purchase of the Atlantic Technology AW Weather Speakers. Utilizing tough, environmentally-resistant materials and state-of-the-art acoustic design, the AW Weather Speakers lets you take Atlantic Technology's famous sound outdoors.

The advanced design of these speakers deliver detailed, articulate sound for a dramatic listening experience. Each speaker contains a MLH (Mineral Loaded Homopolymer) woofer and an advanced 1" (25mm) ferrofluid-cooled, titanium tweeter with a powerful neodymium magnet structure. The drivers are mounted in an acoustically inert, heavily-reinforced enclosure made from mineral-filled polypropylene. This is a far more neutral, less "ringy" material than is typically used with conventional outdoor speakers, and it contributes to the All Weather Speakers amazingly musical sound.

All the component parts of the AW Weather Speakers have been designed for durability under harsh conditions: UV and impact resistant cabinets, aluminum powder-coated grilles and mounting brackets, and gold-plated speaker terminals.

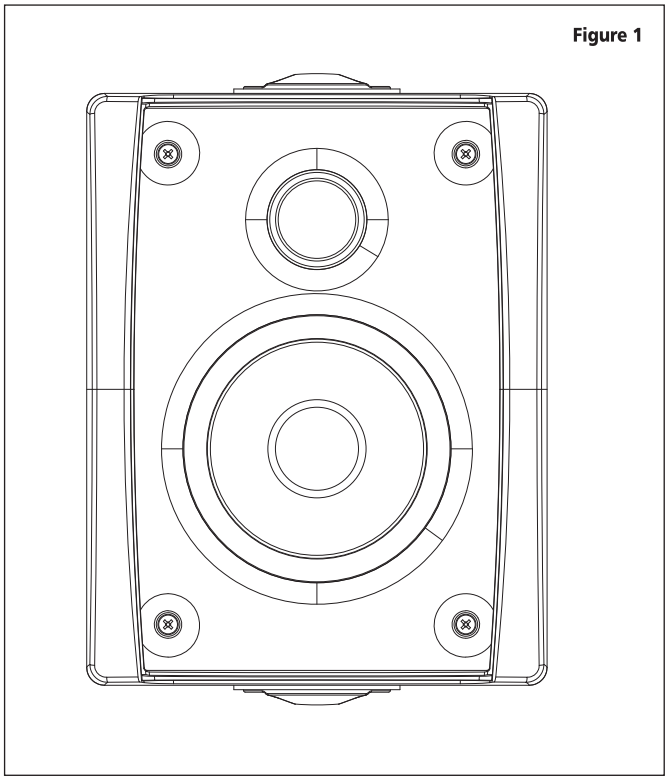
Figure 1

Speaker Placement

Placement has a significant impact on the sound of your system. Please take a few minutes to experiment with different speaker locations to assure that you obtain adequate coverage of your primary listening area before you commit to running speaker wire and permanently attaching the mounting brackets.

The speakers should be far enough apart that you get a good stereo "image" when they are playing, but not so far apart that the sound seems to come only from each individual speaker. Six to ten feet (2-3 meters) is usually the best distance.

Wall-or corner-mounting will tend to increase the speaker's apparent bass output compared to a free-standing speaker, so take this into consideration when choosing a mounting location.

Although the serial of 100, 200, 300 speakers are constructed of the highest quality materials, common sense should be observed when using them. Placement under the eaves reduces the speaker's exposure to direct sunlight and precipitation, which tends to increase the speaker's life and minimize any potential weather-related wear and tear. (See figure 2)

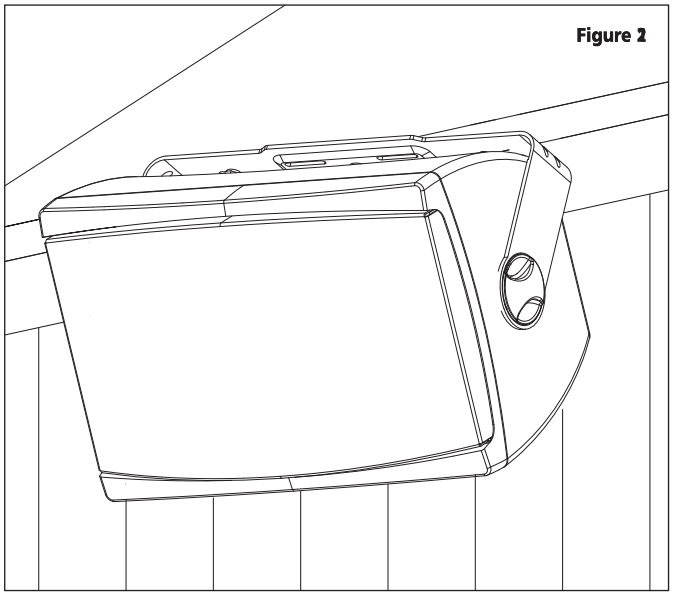
Figure 2

Mounting Your Speakers

Use the supplied mounting brackets to mount the speakers vertically or horizontally on exterior house walls, deck corner posts, or other secure surfaces. The bracket has holes to facilitate a variety of mounting hardware.

Always consult a knowledgeable installer regarding the best hardware to use on your mounting surface.

To mount the speaker, loosen the knobs and remove the bracket from the speaker. If you are running speaker wires, you may route the wires through the large hole in the middle of the bracket; the bracket will then cover the wire hole in the wall.

Mount the bracket in its desired location.

With the bracket mounting knobs loosened, slide the speaker/knob assembly into the mounting channels in the bracket until the speakerseatsin the final position. Adjust the speaker to the desired angle and tighten the knobs to secure the speaker in place. (See below)

You may also use mounting brackets made by other companies, if you choose. The ¼-20 threaded inserts for the knob posts, and the 6mm insert on the back, are the exact same thread sizes used by many manufacturers for their various mounting devices.

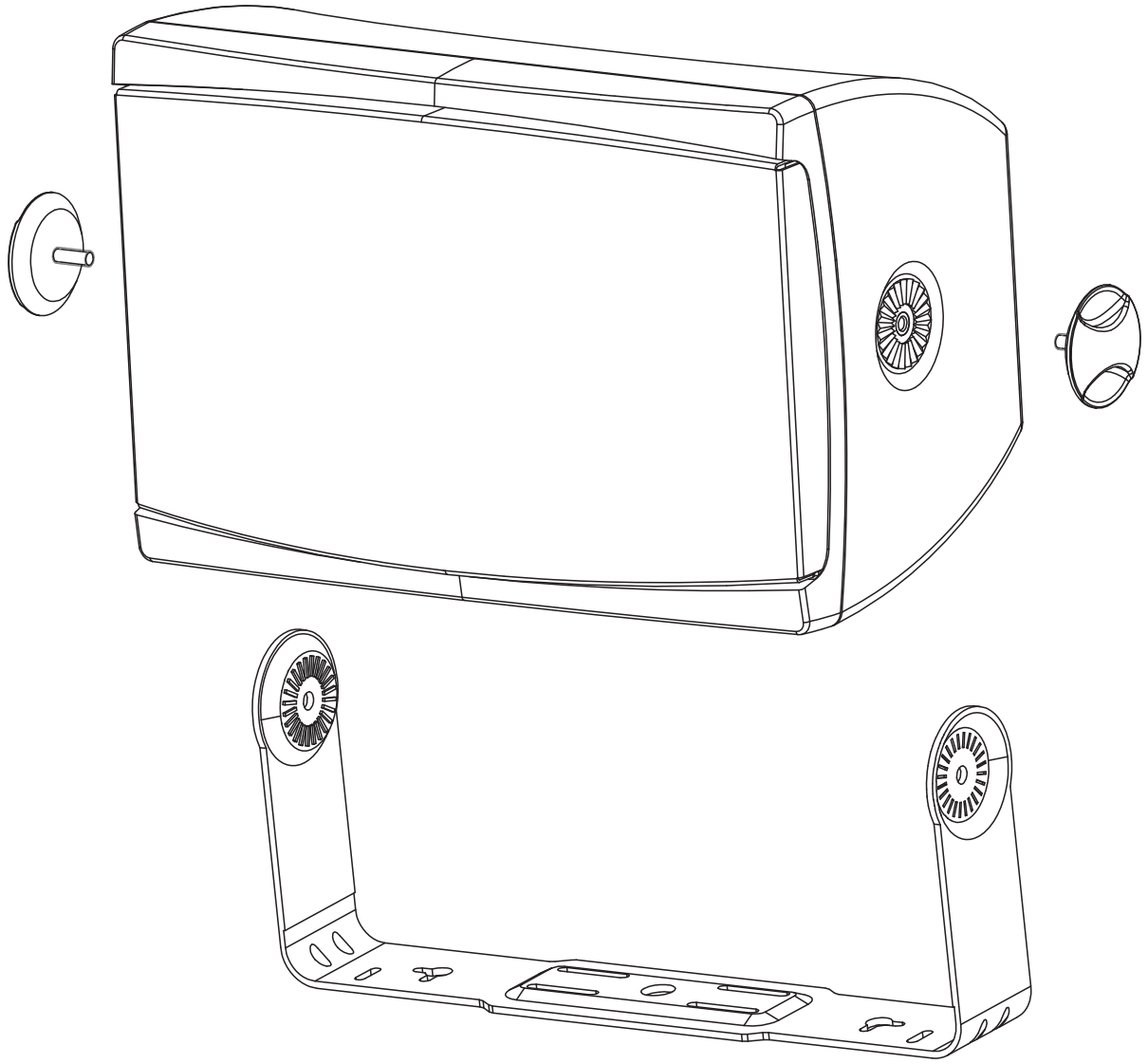

Connecting Your Speakers

We recommend that you connect your speakers using high quality dualconductor stranded wire of 16 gauge or heavier, for lengths up to 25 feet (8m). Remember, the lower the gauge number, the heavier the wire. Useheavier gauge wire for longer runs. Please contact your audio/video dealeror installer for specific cable recommendations and further information regarding special circumstances.

WARNING: *To prevent risk of electrical shock or damage to your equipment, always switch off the amplifier or receiver when making any system connections.*

1. **Remove ½-inch (13mm) of insulation from each wire end.**
2. **Twist the stranded wire together, keeping the two ends separate.**
3. **Push down on the connector post and place the appropriate wire through the postholes in the connector.**

Its important to observe polarity while making speaker connections: red (+) terminals on the amplifier to red (+) on the speaker, black (-) on the amplifier to black (-) on the speaker. Look carefully at the wires you are using and note that one of the conductors of each pair will typically be identified by color, printing on the outer jacket, ridges on the outer jacket, or a thread intertwined with the wire strands. By convention, the marked wire is connected to the red (+) terminal.

WARNING: *Before turning on the amplifier, be certain that no stray wire strands are touching across any terminals as this might damage your amplifier.*

Finally, check the polarity of your front Left/Right speakers by listening to some stereo music with good bass content. If the sound seems hollow, unusually spread out, or seems to have weak bass, recheck your connections for proper polarity and correct any out of phase connections by reversing the connections to one speaker only, if necessary.

Be sure to connect red (+) on the speaker to red (+) on the amplifier and black (-) on the speaker to black (-) on the amplifier.

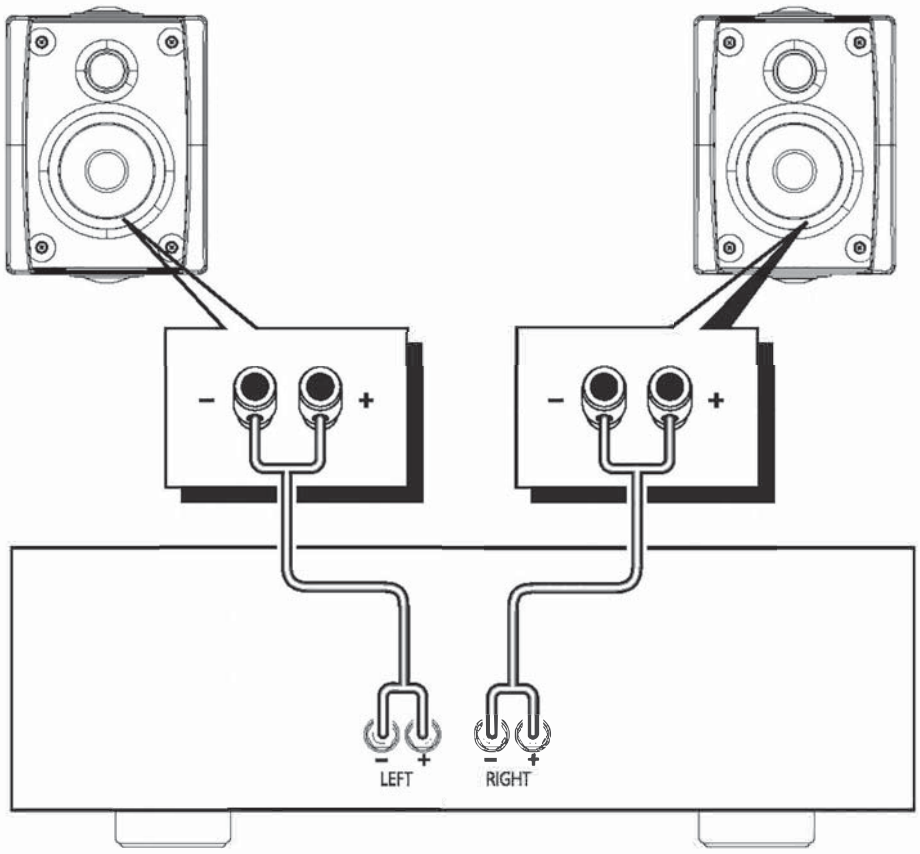

Cable diameter to be used according to the power and the distance on 100 volts mode. (Model AW-TR100, AW-TR200, AW-TR300)

	Power in Watts			
Length (in metres)	60	120	200	300
50	22AWG	22AWG	22AWG	22AWG
100	22AWG	22AWG	22AWG	22AWG
200	22AWG	22AWG	16AWG	16AWG

This speaker is equipped with a high impedance transformer (100V).
The switch enables the mode to be selected: either low impedance (4Ω), or high impedance (100V - 30W, 15W, 7.5W).

Use in low impedance mode (4Ω)

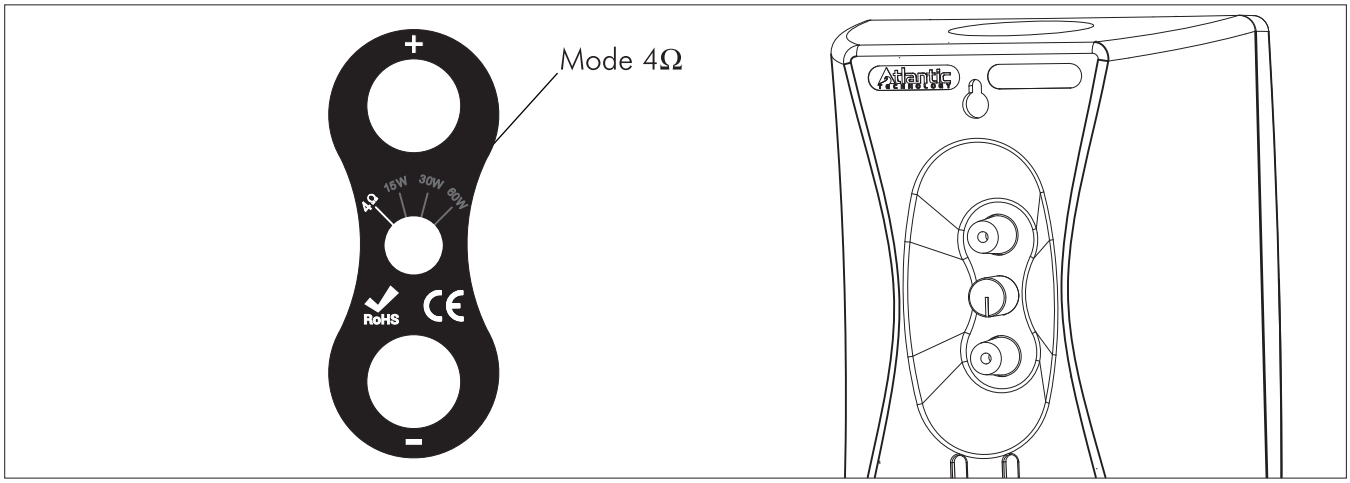

Warning! Before turning the system on, make sure that your amplifier is on 4Ω mode.

Use in high impedance mode (100 V)

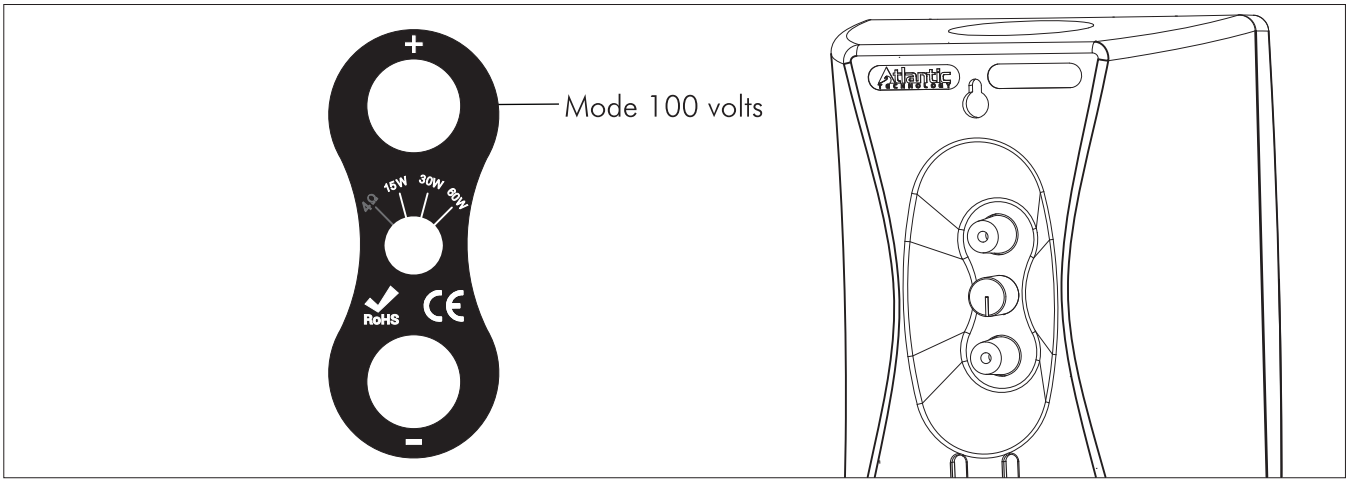

Warning! Before turning the system on, make sure that your amplifier is on 100 V mode.

The electrical connections on 100 V mode must only to be made in parallel

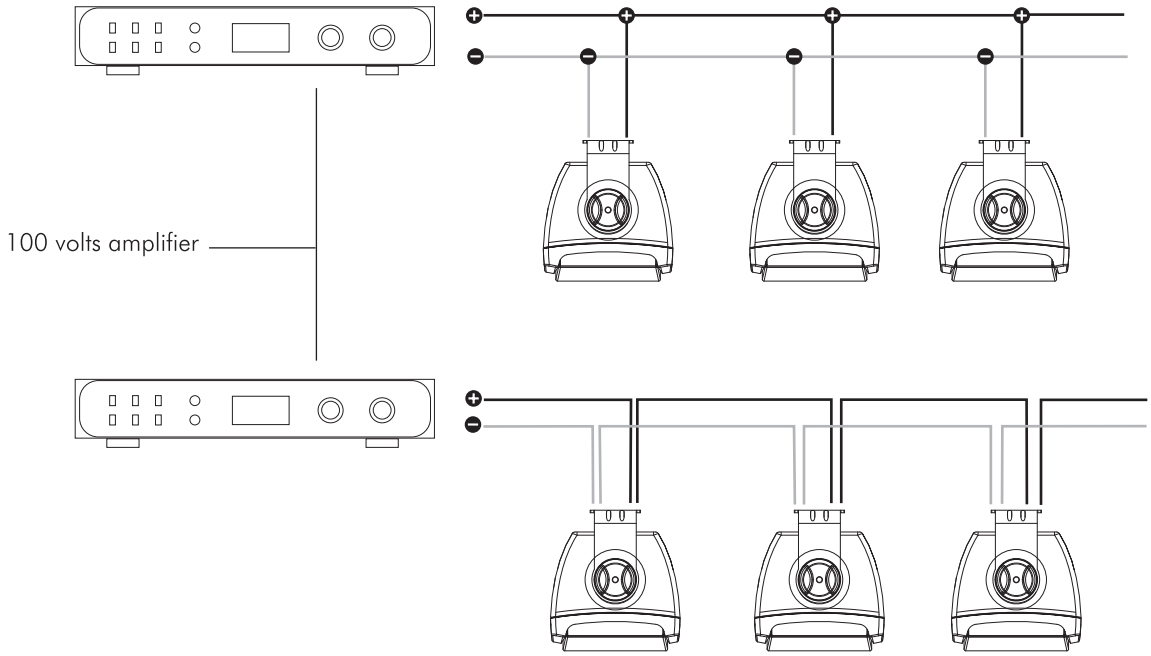

The electrical connections on 4 Ω mode

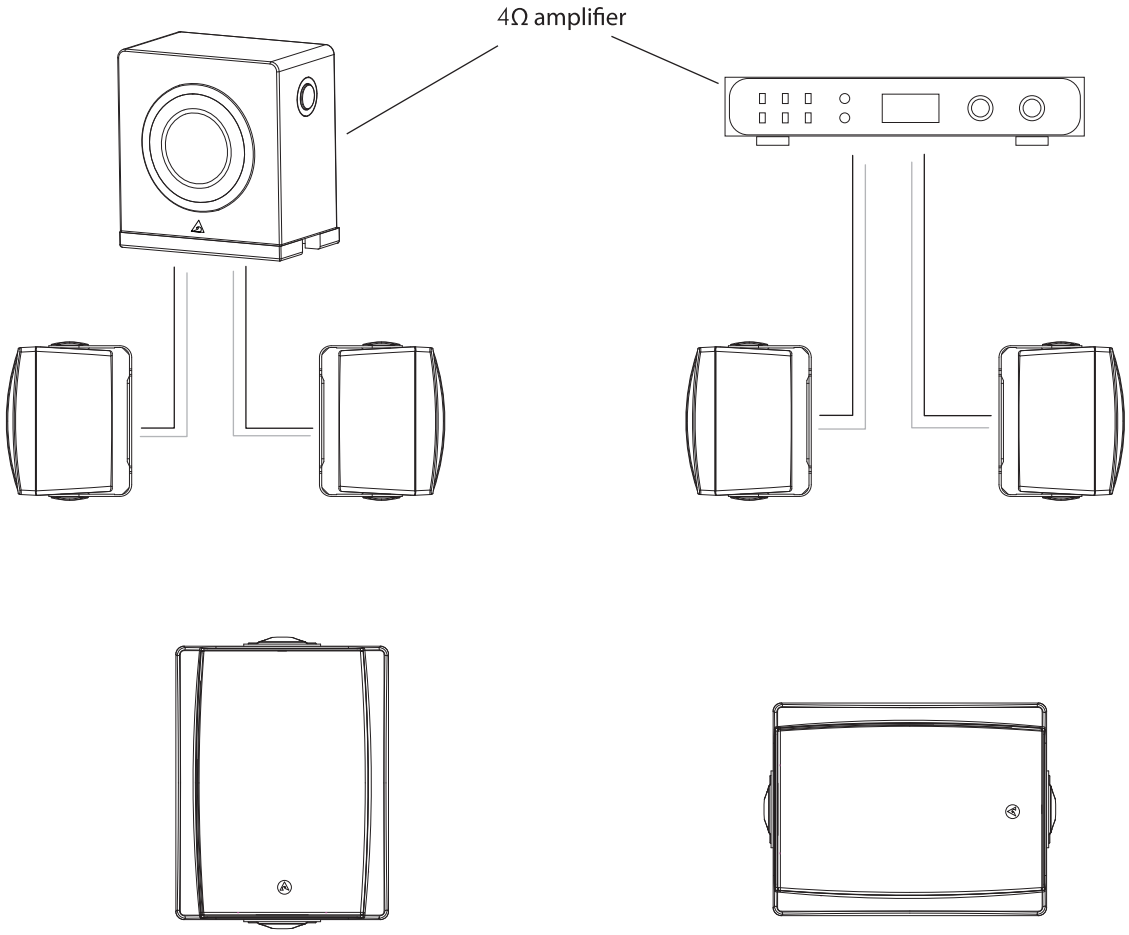

Painting Your Speakers

If desired, you can paint the exterior of the speaker enclosure and grille to better match the speaker's surroundings.

You will need:

- **A fast-drying spray paint specifically formulated for plastic (such as Krylon ® Fusion)**
- **The included grille removal tool, a paper clip or curved-tip awl**
- **Masking tape and heavy paper or cardboard for masking**
- **A clean, dry cloth**

To prepare for painting:

- **Remove the bracket.**
- **Use the included grille removal tool, a paper clip or curved-tip awl to remove the grille.**
- **Cut the paper or cardboard to the size of the baffle (the surface that contains the speaker elements) and the terminal area on the rear panel. Mask these areas off.**
- **Wrap masking tape around the threaded posts of the knobs.**
- **Use a small piece of masking tape to cover the threaded insert.**
- **Use the clean, dry cloth to wipe any dust or dirt off the cabinet.**

Painting the cabinet and knobs:

- **Apply two thin coats of plastic-compatible paint, following the paint manufacturer's directions. Be careful not to fill the threaded inserts with excessive paint.**
- **Paint only the upper surface of the knobs. Do not contaminate the threaded posts with paint.**
- **Let dry thoroughly, then carefully remove the masks and tape from the cabinet.**

Painting the grilles and bracket:

- **Apply one or two coats of paint, being careful not to "fill in" the holes in the metal grille with paint, as this will seriously degrade the sound.**
- **If necessary, you may apply a second coat to the bracket.**

Care of Your Speakers

Clean your cabinets using a soft, lint-free cloth. If you wish, you can slightly moisten the cloth with plain water. Do not use any other cleaning agents or chemicals.

IMPORTANT: SAVE YOUR BOXES! *Remember to save all packing materials until you are certain that the speakers have suffered no damage in shipment. If you find such damage, either visible or internal, contact your dealer immediately.*

If you can do so, save the carton, packing pieces, and plastic bags that came with your speakers. They will be useful in case you move or have to ship your speakers for any reason.

Model AW-WS100, AW-WS200, AW-WS300 functions

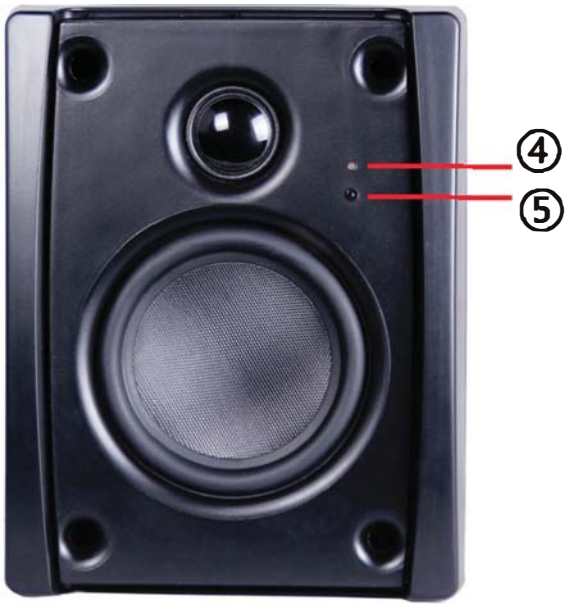

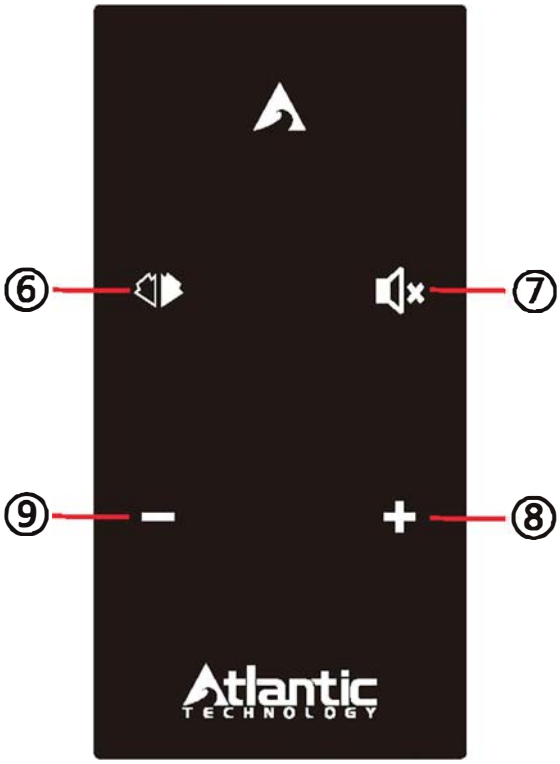

Remote control

1.Skaa Bond Button & Volume

2.Main Power 19vDC/3.5A

3.Left / Right Speaker Selection

4.Skaa Indicator Led

5.IR for Remote

6.Skaa Bond Button

7.Mute Button

8.Volume Up Button

9.Volume Down Button

Using Your AW-WS100, AW-WS200, AW-WS300 As A SKAA Receiver

- The AW-WS100, AW-WS200, AW-WS300 can be used as an SKAA receiver. An SKAA receiver receivers wireless audio from any SKAA transmitter. For a complete list of SKAA transmitters visit https://shop.atlantictechnology.com/product/AW-WS100, AW-WS200, AW-WS300.

- Ensure your SKAA transmitter is powered, and that your host device is playing audio. For example, if you are using a smart phone, make sure that your SKAA transmitter is plugged into your smart phone and that music is playing.

- Press the Bond, The SKAA Indicator LED will illuminate, your AW-WS100, AW-WS200, AW-WS300 should automatically begin playing the audio received over SKAA through the speakers you have connected.

One SKAA transmitter can serve up to four SKAA receivers.

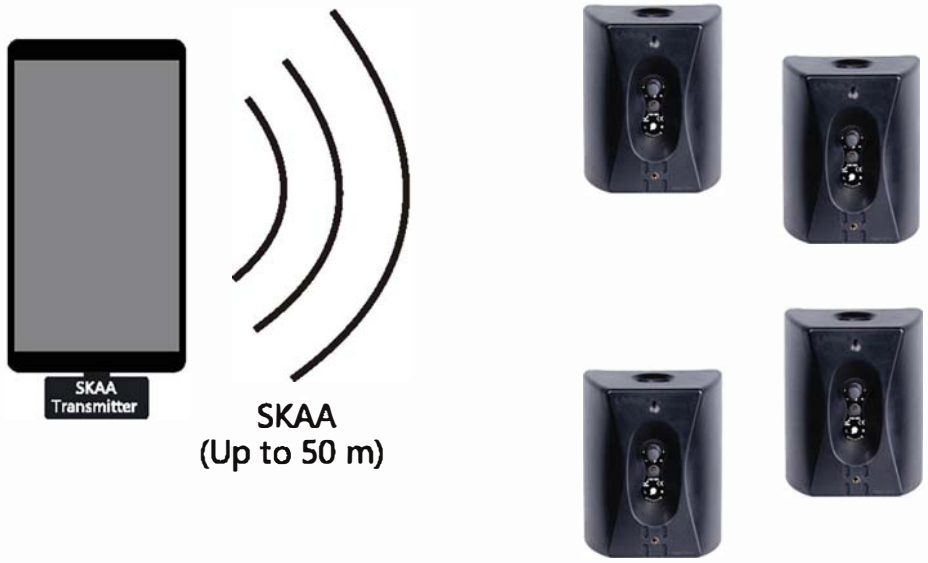

Bond Button	Command	Indicator Meaning
Hold a few seconds	Add / Delete Manually add / delete the current transmitter to / from your Green List	(yellow) to (green) = Added (red) (flash) = Deleted
-	Auto Add SKAA will automatically add the current Amber transmitter to your Green List if you listen to it for 30 minutes	(yellow) to (green) = Added
1 Click	Green Mode Rotate through your list of *favourite* transmitters (Green List) — when a favourite transmitter is found, the search stops and audio plays from that transmitter	(green) (dim) = Hunting (green) (flash) = Next one (green) (bright) = Bonded
2 Clicks	Amber Mode *Explore* for new, unknown transmitters (ones which are not already on your Green List)	(yellow) (dim) = Hunting (yellow) (bright) = Bonded

Bond Button	Command	Indicator Meaning
3 Clicks	Mute do again to Unmute; any Click command will first Unmute and then do its function	(yellow), (green) or (red) = Muted (slow flash)
4 Clicks	Red Mode If you have 2 or more transmitters on your Green List, power on just the one you want to hear and it plays automatically.	(red) (dim) = Hunting (red) (bright) = Bonded
6 Clicks	Factory Reset Clear Green List. Start Over!	(red) (flash) = Reset Done
Hold during power on	Make a Cluster of Receivers: 1. Power off all transmitters and receivers 2. Power on the Master receiver while holding down its Bond Button—hold the button down until the Indicator begins to flash Red 3. With the remaining receivers within 3 meters of the Master receiver, power on the first one, wait for its Indicator to flash Red and then power on the second one; continue until all of them are powered on 4. Once all of the Indicators stop flashing (turn solid Red), power off all of the receivers	(red) (flash) = Receiver has entered 'Cluster Up' mode (red) (bright) = The Cluster has been successfully made

Setup for left & right speaker

1. **Set the toggle switch to "L" for left speaker, Or, Set the toggle switch to "R" for right speaker.**
2. **Turn off ,then turn on.**

**** If you find that the setting of the left and right speakers is different from the actual ones, you can press the Bond button 6 times to restore to the default factory settings.**

SKAA cmd

SKAA cmd is an optional App available for iPhone, iPad, iPod, Android, Mac and PC.You can find it on our website www.skaa.com/tlc/ or in the iOS App store and Google Play. SKAA cmd is great for getting the most out of your AW-WS100, AW-WS200, AW-WS300. To use SKAA cmd, throw your AW-WS100, AW-WS200, AW-WS300 into SKAA mode, download the app, insert a SKAA transmitter and check out all of the customizable features of SKAA. SKAA cmd only works with seven specific SKAA transmitters: Izabella, Diz, Ursula, Gemma, Akiko, Talisa and Cassandra. The AW-WS100, AW-WS200, AW-WS300 will not work with SKAA cmd unless you are using one of the supported transmitters.

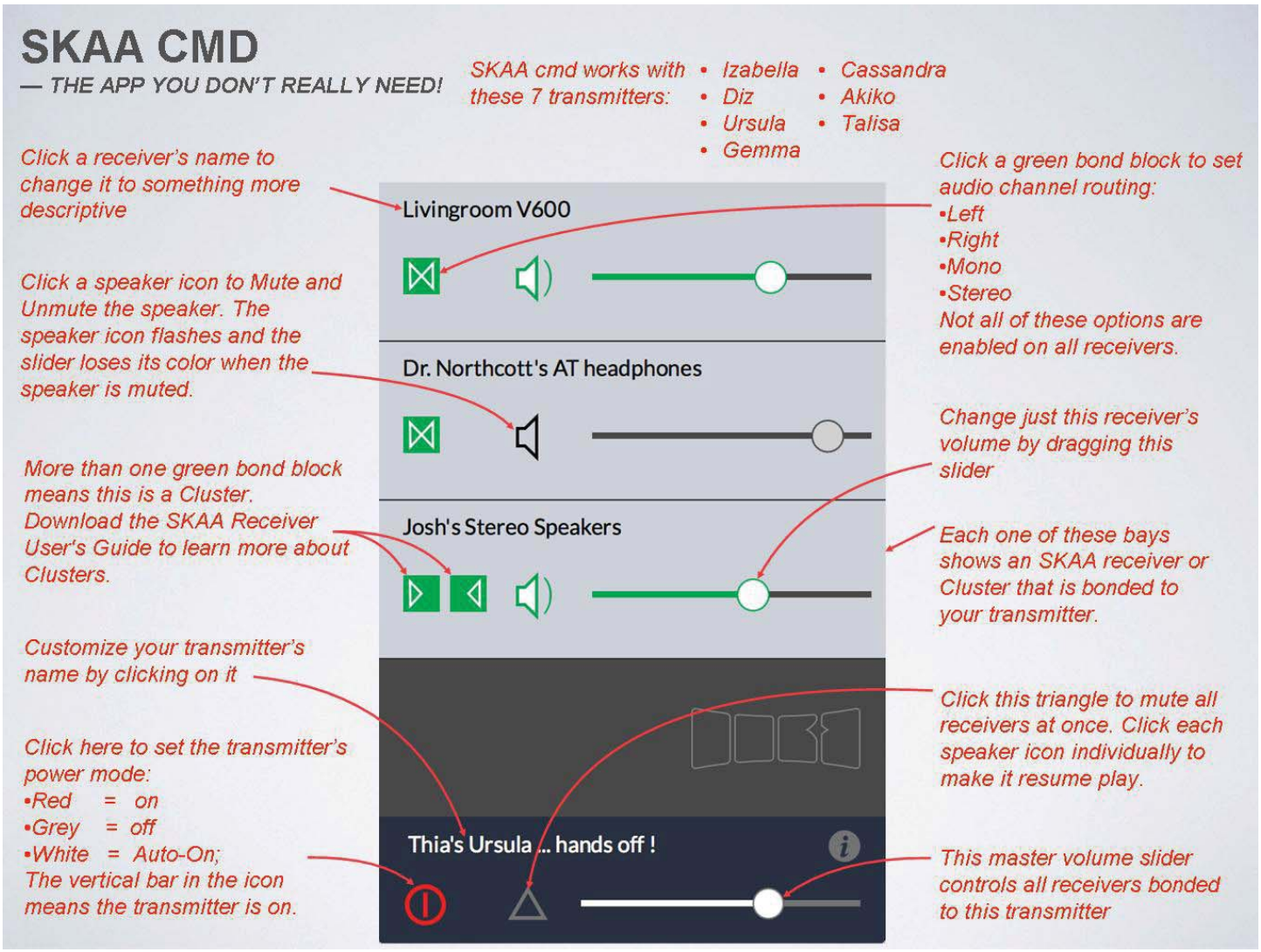

Trouble Shooting Guide

The purpose of this guide is to provide answers to frequently asked questions when using AW-WS100, AW-WS200, AW-WS300 products for the first time.

Note: SKAA provides a very simple, one-button, one-LED, interface. These two components are called, and will be referred to as, the Bond Button and the SKAA Indicator.

At any time, when interacting with SKAA, the user may locate the Bond Button and rapidly click it six times to reset SKAA to its factory settings. In some cases, it can prove useful to factory-reset an SKAA receiver. If an SKAA transmitter is available and transmitting audio, the factory-reset automatically Bonds to the transmitter and resets the volume.

Bond Button Icon

Before proceeding with reading the following frequently asked questions and answers, please make sure that your SKAA devices are powered, in SKAA-mode (if applicable) and in range of one another (~20 m).

1. When I power on my SKAA speaker, the Indicator is dim green and when I play audio from my SKAA transmitter, no sound comes from the speaker.

Most likely your SKAA speaker is hunting for one of your favorite transmitters. Simply press the Bond Button once, in order to switch to another favorite transmitter. If no other favorite transmitters are saved on the Green List, pressing the Bond Button once will not have an effect. In this case, double-click the Bond Button in order to put the speaker into Amber Mode. Amber Mode will explore for new, unknown transmitters in the area that are currently playing audio. If the issue persists, you can always factory reset the SKAA receiver by six-clicking the Bond Button. The SKAA Indicator will flicker red for one second and the speaker will return to Amber Mode. If six-clicking the Bond Button has no effect, see the next trouble-shooting item.

2. When I power on my SKAA speaker and attempt to play audio from a SKAA transmitter, I hear no sound, the Indicator is dim green and no matter how many times I click the Bond button, nothing changes.

In this case, your SKAA speaker is a Slave speaker in a Cluster of speakers. This means that this speaker was probably sold with at least one other speaker, and one of these other speakers is the Master speaker. The Master speaker is responsible for controlling all Slave speakers. A Slave speaker will always follow the Master speaker. Some Slave speakers still contain a Bond Button in order to mute the speaker (this can be accomplished by triple-clicking the Bond Button). Any SKAA speaker with a Bond Button on it can be a stand-alone speaker, however it will have to be "unclustered" See the SKAA Receiver User's Guide for the unclustering procedure.

Specifications

Model	AW-SD100	AW-TR100	AW-WS100
Type	2-way Sealed Indoor/Outdoor Speaker	2-way Sealed Indoor/Outdoor Speaker	2-way Sealed Indoor/Outdoor Speaker
Drivers Woofer Tweeter	(1) 4" (102mm) MLH (1) 1" (25mm) titanium	(1) 4" (102mm) MLH (1) 1" (25mm) titanium	(1) 4" (102mm) MLH (1) 1" (25mm) titanium
Frequency Response	65Hz–20kHz ±2dB	65Hz–20kHz ±2dB	65Hz–20kHz ±2dB
Nominal Impedance	4 ohms	4 ohms / 900Ω(7.5W) / 450Ω(15W) / 250Ω(30W)	4 ohm
Crossover Frequency	3 kHz, 2nd order	3 kHz, 2nd order	3 kHz, 2nd order
Sensitivity	90 dB	90 dB	90 dB
Recommended Amplifier Power	10–75 Watts RMS	10–75 Watts RMS	30 Watts RMS
Dimensions w/grille (W x H x D)	6" x 8¼" x 5½" (155 x 210 x 140mm)	6" x 8¼" x 5½" (155 x 210 x 140mm)	6" x 8¼" x 5½" (155 x 210 x 140mm)
Weight (ea)	9.5 lbs (4.3kg)	11.4 lbs (5.2 kg)	12.8 lbs (5.8 kg)
Threaded Inserts	bracket knob 1/4" x 20, rear insert 6mm	bracket knob 1/4" x 20, rear insert 6mm	bracket knob 1/4" x 20, rear insert 6mm

Specifications

Model	AW-SD200	AW-TR200	AW-WS200
Type	2-way Sealed Indoor/Outdoor Speaker	2-way Sealed Indoor/Outdoor Speaker	2-way Sealed Indoor/Outdoor Speaker
Drivers Woofer Tweeter	(1) 5½" (140mm) MLH (1) 1" (25mm) titanium	(1) 5½" (140mm) MLH (1) 1" (25mm) titanium	(1) 5½" (140mm) MLH (1) 1" (25mm) titanium
Frequency Response	50Hz–20kHz ±2dB	50Hz–20kHz ±2dB	50Hz–20kHz ±2dB
Nominal Impedance	4 ohms	4 ohms / 450Ω(15W) / 240Ω(30W) / 120Ω(60W)	4 ohm
Crossover Frequency	3.5 kHz, 2nd order	3.5 kHz, 2nd order	3.5 kHz, 2nd order
Sensitivity	90 dB	90 dB	90 dB
Recommended Amplifier Power	10–100 Watts RMS	10–100 Watts RMS	50 Watts RMS
Dimensions w/grille (W x H x D)	7¼" x 11¼" x 5⅞" (183 x 285 x 175 mm)	7¼" x 11¼" x 5⅞" (183 x 285 x 175 mm)	7¼" x 11¼" x 5⅞" (183 x 285 x 175 mm)
Weight (ea)	12.3 lbs (5.6 kg)	14.7 lbs (6.7 kg)	15.8 lbs (7.2 kg)
Threaded Inserts	bracket knob 1/4" x 20, rear insert 6mm	bracket knob 1/4" x 20, rear insert 6mm	bracket knob 1/4" x 20, rear insert 6mm

Specifications

Model	AW-SD300	AW-TR300	AW-WS300
Type	2-way Sealed Indoor/Outdoor Speaker	2-way Sealed Indoor/Outdoor Speaker	2-way Sealed Indoor/Outdoor Speaker
Drivers Woofer Tweeter	(1) 6½" (165mm) MLH (1) 1" (25mm) titanium	(1) 6½" (165mm) MLH (1) 1" (25mm) titanium	(1) 6½" (165mm) MLH (1) 1" (25mm) titanium
Frequency Response	45Hz–20kHz ±2dB	45Hz–20kHz ±2dB	45Hz–20kHz ±2dB
Nominal Impedance	4 ohms	4 ohms / 450Ω(15W) / 240Ω(30W) / 120Ω(60W)	4 ohm
Crossover Frequency	3.5 kHz, 2nd order	3.5 kHz, 2nd order	3.5 kHz, 2nd order
Sensitivity	90 dB	90 dB	90 dB
Recommended Amplifier Power	10–120 Watts RMS	10–120 Watts RMS	65 Watts RMS
Dimensions w/grille (W x H x D)	8⅝" x 13⅛" x 5½" (220 x 335 x 185 mm)	8⅝" x 13⅛" x 5½" (220 x 335 x 185 mm)	8⅝" x 13⅛" x 5½" (220 x 335 x 185 mm)
Weight (ea)	14.5 lbs (6.6 kg)	16.9 lbs (7.7 kg)	18.0 lbs (8.2 kg)
Threaded Inserts	bracket knob 1/4" x 20, rear insert 6mm	bracket knob 1/4" x 20, rear insert 6mm	bracket knob 1/4" x 20, rear insert 6mm

IMPORTANT NOTE: *The power recommendation for these speakers assumes that you will not operate your amplifier/receiver in a way that produces distortion. Even rugged speakers like ours can be damaged by an amplifier driven into audible distortion. The harsh amplifier distortion (clipping) that occurs in this situation will eventually cause damage to the speakers. This type of damage may be cumulative and can build up over time, as the amplifier is driven into over load again and again. Such damage is easily identifiable through examination of the damaged speakers voice coil and is not covered by the warranty.*

Specifications are those in effect at the time of printing. As part of our ongoing program of continuous product improvement, Atlantic Technology reserves the right to change specifications or appearance at any time without notice or obligation to modify existing product..

Warranty

First, we'd like to thank you for purchasing an Atlantic Technology product. We wish you many years of enjoyment and satisfaction from it.

Second, be aware that you don't have to send in any Warranty card to be covered by the Limited Warranty.All you need to do is keep your original Invoice or Bill of Sale for proof of purchase, meet the stated requirements, and follow the instructions listed within that Warranty. Please attach your Original Invoice or Bill of Sale to this manual as proof of purchase and keep them in a safe place.

VERY IMPORTANT NOTE: *PLEASE NOTE THAT ATLANTIC TECHNOLOGY PRODUCTS CARRY ONLY A 90 DAY LIMITED WARRANTY. YOU MUST MEET ALL THE BELOW REQUIREMENTS AND REGISTER ONLINE IN ORDER TO BE COVERED BY THE FREE EXTENDED SERVICE AGREEMENT TO ASSURE EXTENDED FREE PROTECTION!!*

Free Extended Service Agreement

Atlantic Technology offers a free Extended Service Agreement that provides enhanced protection against product defects. In order to qualify for the free Extended Service Agreement you must:

1. Have purchased your Atlantic Technology products from an Authorized. Atlantic Technology Reseller or Installer.
2. Go to www. atlantictechnology.com and click on Support>Register Your Warranty.Fill out the required information. Be sure to have your home address, name, address and invoice from the business you purchased, and the serial numbers of all Atlantic Technology products purchased. **THIS MUST BE DONE WITHIN 30 DAYS OFPURCHASE.**
3. If you purchased multiple Atlantic Technology products you will be able to enter them all using one online form. Model and Serial numbers can be found on the back of each unit and on the outside of their respective boxes.

Once all the criteria have been met, you qualify for a free Extended Service Agreement that entitles you to additional coverage against defects in workmanship and manufacturing for a period of up to 5 years on passive speakers and up to 1 year on powered speakers (including subwoofers). This coverage is in addition to the 90 Day Limited Warranty included with all Atlantic Technology products.

If you are not able to register your product using the internet, please call customer service at 781.762.6300

Limited Warranty

Statement of Warranty: Atlantic Technology International Corp.warrants Atlantic Technology Products to be free from defects in material and workmanship for 90days from the time of original purchase.This Warranty covers the original retail purchaser of this product only and is valid only in the Continental United States,Alaska, and Hawaii and all US Possessions.

Extended Service Agreement (only available in the Continental United States,Alaska,and Hawaii and all US Possessions): You must complete the Extended Service Agreement ppi-cation, and meet all of the purchase criteria stated on that application, to receive an Extended Service. Agreement that covers your Atlantic Technology products well beyond the standard 90day Warranty.

To obtain Warranty service: Please contact your local Atlantic Technology reseller to determine if they are an Authorized Repair Center for Atlantic Technology products. You will need your original Invoice or BILL of Sale to prove Warranty eligibility. If your local dealer is not an. Authorized Warranty Center you may contact us at 781-762-6300 for further help or to send the product back to us for service and repair. You must first get a Return Authorization Number from us to ship the product back, so it is imperative that you call us first.

What we are responsible for: We will pay for all labor and parts for covered items. If the repairs are eligible for coverage under the terms of this Warranty we will also pay for return shipping charges to you.

What you are responsible for: You must pack the product properly for safe shipping lo your Authorized Dealer or us. You are responsible to pay for all packing, shipping, and insurance costs to get the unit(s) back to Atlantic Technology or your Authorized Dealer.

Optional replacement: We,at our option, may replace rather than repair your Atlantic Technology product with a new or reconditioned one of the same or similar design. The repair or replacement will be warranted for 90 days from date of receipt back to you. All details.in terms of eligibility for an Extended Service Agreement will carry over from the original purchase to the replacement item.

What this Warranty does not cover: This Warranty does not cover defects resulting from accidents, damage while in transit, alterations, unauthorized repair, failure to follow instructions, misuse, fire, flood, and Acts of God. This Warranty will be void if the product's serial number has been altered pr removed or if the product has been modified or defaced.

Exclusions and Limitations: Implied warranties, including those of fitness for a particular purpose and merchantability (an unwritten warranty that the product is fit for ordinary use)are limited to the period of any Warranty granted hereby. We will not pay for loss of time,inconvenience, loss of use,or property damage caused by your Atlantic Technology product or its failure to work, or any other incidental or consequential damages.

State law rights: Some states do not allow the exclusion or limitation of incidental or consequential damages, so the above limitation or exclusion may not apply to you.This Warranty gives you specific legal rights, and you may have other rights which vary from state to state.This Warranty is valid only when Atlantic Technology products are purchased from an Authorized Atlantic Technology Reseller in the Continental United States,Alaska, and Hawaii and all US Possessions If you purchase Atlantic Technology products outside the United States please consult your local distributor or reseller for applicable Warranty coverage and restrictions.

Should you have any questions or problems please feel free to contact us at 781-762-6300 or through our web site, www. atlantictechnology. com

343 Vanderbilt Avenue Norwood, MA 02062 (781) 762-6300 www.atlantictechnology.com

FCC Statement:
This device complies with part 15 of the FCC Rules. Operation is subject to the following two conditions: (1) This device may not cause harmful interference, and (2) this device must accept any interference received, including interference that may cause undesired operation.
This equipment has been tested and found to comply with the limits for a Class B digital device, pursuant to part 15 of the FCC Rules. These limits are designed to provide reasonable protection against harmful interference in a residential installation. This equipment generates, uses and can radiate radio frequency energy and, if not installed and used in accordance with the instructions, may cause harmful interference to radio communications. However, there is no guarantee that interference will not occur in a particular installation. If this equipment does cause harmful interference to radio or television reception, which can be determined by turning the equipment off and on, the
user is encouraged to try to correct the interference by one or more of the following measures:
—Reorient or relocate the receiving antenna.
—Increase the separation between the equipment and receiver.
—Connect the equipment into an outlet on a circuit different from that to which the receiver is connected.
—Consult the dealer or an experienced radio/TV technician for help.
Caution: Any changes or modifications not expressly approved by the party responsible for compliance could void the user's authority to operate the equipment.

This equipment complies with FCC radiation exposure limits set forth for an uncontrolled environment. This transmitter must not be co-located or operating in conjunction with any other antenna or transmitter.

This equipment should be installed and operated with minimum distance 20cm between the radiator&your body.