Manual

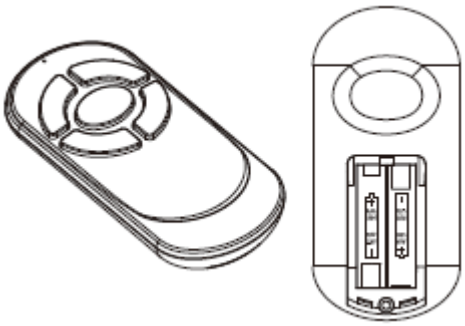

Remote Controller

Model Number: RC5A1

USER INSTRUCTIONS FOR REMOTE CONTROLLER

1. This remote controller is used to operate Grow & Stow christmas tree product.
2. Remove the battery lid ❻ at the back of remote control, install two AAA/UM4/LR03 batteries (not included) as indicated inside the battery compartment. Make sure to match the (+) and (-) ends of the batteries. (see Fig 2).
3. Press light mode button ❸ to navigate the light functions.
4. Press the UP button ❹ on Remote Control Hand Set to activate the tree Grow motion.
5. Press the DOWN button ❺ on Remote Control Hand Set to activate the tree Stow motion.

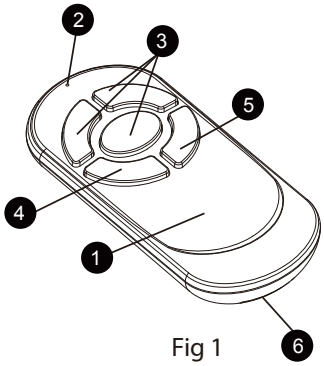

Fig 1

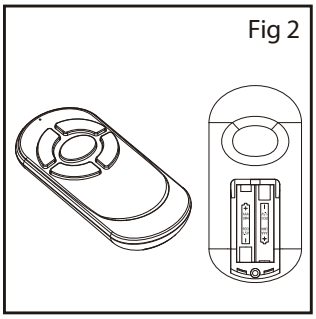

Key	Description	Qty
1	Remote Control handset	1
2	Remote LED indicator	
3	Remote light functions button	
4	Remote grow (Up and Pause) button	
5	Remote stow (Down and Pause) button	
6	Remote battery compartment and lid	

FCC Information and Copyright

This equipment has been tested and found to comply with the limits for a Class B digital device, pursuant to part 15 of the FCC Rules.

These limits are designed to provide reasonable protection against harmful interference in a residential installation. This equipment generates,

uses and can radiate radio frequency energy and, if not installed and used in accordance with the instructions, may cause harmful interference

to radio communications. However, there is no guarantee that interference will not occur in a particular installation. If this equipment does

cause harmful interference to radio or television reception, which can be determined by turning the equipment off and on, the user is

encouraged to try to correct the interference by one or more of the following measures:

—Reorient or relocate the receiving antenna.

—Increase the separation between the equipment and receiver.

—Connect the equipment into an outlet on a circuit different from that to which the receiver is connected.

—Consult the dealer or an experienced radio/TV technician for help.

This device complies with part 15 of the FCC Rules. Operation is subject to the following two conditions:

(1)This device may not cause harmful interference, and

(2) this device must accept any interference received, including interference that may cause undesired operation.

changes or modifications not expressly approved by the party responsible for compliance could void the user's authority to operate the equipment.

IC warning

This device complies with Industry Canada licence-exempt RSS standard(s).

Operation is subject to the following two conditions: (1) This device may not cause interference, and (2) This device must accept any interference, including interference that may cause undesired operation of the device.

Le présent appareil est conforme aux CNR d'Industrie Canada applicables aux appareils radio exempts de licence. L'exploitation est autorisée aux deux conditions suivantes:

(1) l'appareil ne doit pas produire de brouillage, et

(2) l'utilisateur de l'appareil doit accepter tout brouillage radioélectrique subi, même si le brouillage est susceptible d'en compromettre le fonctionnement

changes or modifications not expressly approved by the party responsible for compliance could void the user's authority to operate the equipment.