# RADIO TEST REPORT
# FCC ID: 2AABZ-PR4

**Product:** PR-4 4-Channel/6-Track Compact Audio Recorder

**Trade Mark:** DEITY

**Model No.:** PR-4

**Family Model:** N/A

**Report No.:** N25102404524E

**Issue Date:** Jan. 21, 2026

**Prepared for**

Aputure Imaging Industries Co., Ltd.

Floor 1, Building 21, Baolongjun Industrial Park, No.1004, Longhua Heping Road, Longping Community, Dalang Street, Longhua District, Shenzhen, Guangdong 518110, China

**Prepared by**

Shenzhen NTEK Testing Technology Co., Ltd.

No. 24 Xinfa East Road, Xiangshan Community, Xinqiao Street, Baoan District, Shenzhen, Guangdong, People's Republic of China

Tel. 0755-2320 0050 Website: http://www.ntek.org.cn

# TAGFSK OF CONTENTS


**1 TEST RESULT CERTIFICATION ..... 3**

**2 SUMMARY OF TEST RESULTS ..... 4**

**3 FACILITIES AND ACCREDITATIONS ..... 5**

3.1 FACILITIES ..... 5
3.2 LABORATORY ACCREDITATIONS AND LISTINGS ..... 5
3.3 MEASUREMENT UNCERTAINTY ..... 5

**4 GENERAL DESCRIPTION OF EUT ..... 6**

**5 DESCRIPTION OF TEST MODES ..... 8**

**6 SETUP OF EQUIPMENT UNDER TEST ..... 10**

6.1 BLOCK DIAGRAM CONFIGURATION OF TEST SYSTEM ..... 10
6.2 SUPPORT EQUIPMENT ..... 11
6.3 EQUIPMENTS LIST FOR ALL TEST ITEMS ..... 12

**7 TEST REQUIREMENTS ..... 14**

7.1 CONDUCTED EMISSIONS TEST ..... 14
7.2 RADIATED SPURIOUS EMISSION ..... 16
7.3 6DB BANDWIDTH ..... 25
7.4 DUTY CYCLE ..... 26
7.5 PEAK OUTPUT POWER ..... 28
7.6 POWER SPECTRAL DENSITY ..... 29
7.7 CONDUCTED BAND EDGE MEASUREMENT ..... 31
7.8 SPURIOUS RF CONDUCTED EMISSIONS ..... 32
7.9 ANTENNA APPLICATION ..... 33

**8 TEST RESULTS ..... 34**

8.1 CONDUCTED OUTPUT POWER ..... 34
8.2 99% BANDWIDTH ..... 35
8.3 6DB BANDWIDTH ..... 36
8.4 CONDUCTED SPURIOUS & BAND EDGE EMISSION ..... 37
8.5 DUTY CYCLE ..... 38
8.6 POWER SPECTRAL DENSITY ..... 39

# 1 TEST RESULT CERTIFICATION

| | |
|---|---|
| Applicant's name ..... | Aputure Imaging Industries Co., Ltd. |
| Address ..... | Floor 1, Building 21, Baolongjun Industrial Park, No.1004, Longhua Heping Road, Longping Community, Dalang Street, Longhua District, Shenzhen, Guangdong 518110, China |
| Manufacturer's Name ..... | Aputure Imaging Industries Co., Ltd. |
| Address ..... | Floor 1, Building 21, Baolongjun Industrial Park, No.1004, Longhua Heping Road, Longping Community, Dalang Street, Longhua District, Shenzhen, Guangdong 518110, China |
| Product description | |
| Product name ..... | PR-4 4-Channel/6-Track Compact Audio Recorder |
| Trade Mark ..... | DEITY |
| Model and/or type reference ..... | PR-4 |
| Family Model ..... | N/A |
| Test Sample number ..... | S2512110056-1# |
| Date (s) of performance of tests.. | Oct. 24, 2025 ~ Jan. 21, 2026 |

Measurement Procedure Used:

| APPLICAGFSK STANDARDS | |
|---|---|
| APPLICAGFSK STANDARD/ TEST PROCEDURE | TEST RESULT |
| FCC 47 CFR Part 2, Subpart J<br>FCC 47 CFR Part 15, Subpart C<br>ANSI C63.10-2020<br>KDB 558074 D01 15.247 Meas Guidance v05r02 | Complied |

This device described above has been tested by Shenzhen NTEK Testing Technology Co., Ltd., and the test results show that the equipment under test (EUT) is in compliance with the FCC requirements. And it is applicable only to the tested sample identified in the report.
This report shall not be reproduced except in full, without the written approval of Shenzhen NTEK Testing Technology Co., Ltd., this document may be altered or revised by Shenzhen NTEK Testing Technology Co., Ltd., personnel only, and shall be noted in the revision of the document.
The test results of this report relate only to the tested sample identified in this report.

| Prepared By: | Reviewed By: | Approved By: |
|---|---|---|
| Kieron Luo | Aaron Cheng | Alex Li |
| Kieron Luo<br>(Project Engineer) | Aaron Cheng<br>(Supervisor) | Alex Li<br>(Manager) |

## 2 SUMMARY OF TEST RESULTS

| FCC Part15 (15.247), Subpart C | | | |
|---|---|---|---|
| **Standard Section** | **Test Item** | **Verdict** | **Remark** |
| 15.207 | Conducted Emission | N/A | |
| 15.247 (a)(2) | 6dB Bandwidth | PASS | |
| 15.247 (b) | Peak Output Power | PASS | |
| 15.209 (a)<br>15.205 (a) | Radiated Spurious Emission | PASS | |
| 15.247 (e) | Power Spectral Density | PASS | |
| 15.247 (d) | Band Edge Emission | PASS | |
| 15.247 (d) | Spurious RF Conducted Emission | PASS | |
| 15.203 | Antenna Requirement | PASS | |

Remark:
1. "N/A" denotes test is not applicable in this Test Report.
2. All test items were verified and recorded according to the standards and without any deviation during the test.
3. When connected to a communicable device, the charging function is disabled.

# 3 FACILITIES AND ACCREDITATIONS

## 3.1 FACILITIES

All measurement facilities used to collect the measurement data are located at
No. 24 Xinfa East Road, Xiangshan Community, Xinqiao Street, Baoan District, Shenzhen, Guangdong, People's Republic of China.
The sites are constructed in conformance with the requirements of ANSI C63.7, ANSI C63.10 and CISPR Publication 22.

## 3.2 LABORATORY ACCREDITATIONS AND LISTINGS

Site Description

| | | |
|---|---|---|
| CNAS-Lab. | : | The Certificate Registration Number is L5516. |
| IC-Registration | | The Certificate Registration Number is 9270A.<br>CAB identifier:CN0074 |
| FCC- Accredited | | Test Firm Registration Number: 463705.<br>Designation Number: CN1184 |
| A2LA-Lab. | | The Certificate Registration Number is 4298.01<br>This laboratory is accredited in accordance with the recognized International Standard ISO/IEC 17025:2017 General requirements for the competence of testing and calibration laboratories.<br>This accreditation demonstrates technical competence for a defined scope and the operation of a laboratory quality management system (refer to joint ISO-ILAC-IAF Communiqué dated 8 January 2009). |
| Name of Firm | : | Shenzhen NTEK Testing Technology Co., Ltd. |
| Site Location | : | No. 24 Xinfa East Road, Xiangshan Community, Xinqiao Street, Baoan District, Shenzhen, Guangdong, People's Republic of China. |

## 3.3 MEASUREMENT UNCERTAINTY

The reported uncertainty of measurement y±U, where expended uncertainty U is based on a standard uncertainty multiplied by a coverage factor of k=2, providing a level of confidence of approximately 95 %.

| No. | Item | Uncertainty |
|---|---|---|
| 1 | Conducted Emission Test | ±2.80dB |
| 2 | RF power, conducted,PSD | ±0.16dB |
| 3 | Spurious emissions, conducted | ±0.21dB |
| 4 | All emissions, radiated(30MHz~1GHz) | ±2.64dB |
| 5 | All emissions, radiated(1GHz~6GHz) | ±2.40dB |
| 6 | All emissions, radiated(＞6GHz) | ±2.52dB |
| 7 | Temperature | ±0.5°C |
| 8 | Humidity | ±2% |
| 9 | All emissions, radiated(9KHz~30MHz) | ±6dB |
| 10 | Occupied bandwidth | ±4.7% |
| 11 | Duty cycle | ±2.5% |

# 4 GENERAL DESCRIPTION OF EUT

| Product Feature and Specification | |
|---|---|
| Equipment | PR-4 4-Channel/6-Track Compact Audio Recorder |
| Trade Mark | DEITY |
| FCC ID | 2AABZ-PR4 |
| Model No. | PR-4 |
| Family Model | N/A |
| Model Difference | N/A |
| Operating Frequency | 2.4G SRD:2440 MHz |
| Modulation | GFSK |
| Number of Channels | 1 Channels |
| Antenna Type | Ceramic Antenna |
| Antenna Gain | 1.3 dBi |
| Adapter | N/A |
| Battery | DC 3.7V 305mAh |
| Power supply | DC 5V/9V/12V for Type-C or DC 3.7V from battery |
| HW Version | N/A |
| FW Version | N/A |
| SW Version | N/A |

Note 1: Based on the application, features, or specification exhibited in User's Manual, the EUT is considered as an ITE/Computing Device. More details of EUT technical specification, please refer to the User's Manual.
Note 2: The engineering test program was provided and the EUT was programmed to be in continuously transmitting mode.

**Revision History**

| Report No. | Version | Description | Issued Date |
|---|---|---|---|
| N25102404524E | Rev.01 | Initial issue of report | Jan. 21, 2026 |
| | | | |
| | | | |
| | | | |
| | | | |
| | | | |
| | | | |
| | | | |
| | | | |
| | | | |
| | | | |
| | | | |
| | | | |
| | | | |
| | | | |

# 5 DESCRIPTION OF TEST MODES

To investigate the maximum EMI emission characteristics generates from EUT, the test system was pre-scanning tested base on the consideration of following EUT operation mode or test configuration mode which possible have effect on EMI emission level. Each of these EUT operation mode(s) or test configuration mode(s) mentioned above was evaluated respectively.

The Transmitter was operated in the normal operating mode. The TX frequency was fixed which was for the purpose of the measurements.

Test of channel included the lowest and middle and highest frequency to perform the test, then record on this report.

Those data rates (1Mbpsfor GFSK modulation) were used for all test.

The EUT was pretested with 3 orientations placed on the table for the radiated emission measurement –X, Y, and Z-plane. The X-plane results were found as the worst case and were shown in this report.

Carrier Frequency and Channel list:

| GFSK(1M) | |
|---|---|
| Channel | Frequency (MHz) |
| 00 | 2440 |

The following summary table is showing all test modes to demonstrate in compliance with the standard.

| **Test Cases** | |
|---|---|
| Test Item | Data Rate/ Modulation |
| Radiated Test Cases | Mode 1: normal link mode |
| | Mode 2: GFSK Tx Ch00_2440MHz_1Mbps |
| Conducted Test Cases | Mode 2: GFSK Tx Ch00_2440MHz_1Mbps |

Note:

1. The engineering test program was provided and the EUT was programmed to be in continuously transmitting mode(duty cycle =100% during the test)
2. AC power line Conducted Emission was tested under maximum output power.
3. For radiated test cases, the worst mode data rate 2Mbps was reported only, because this data rate has the highest RF output power at preliminary tests, and no other significantly frequencies found in conducted spurious emission.
4. EUT built-in battery-powered, the battery is fully-charged.

# 6 SETUP OF EQUIPMENT UNDER TEST

## 6.1 BLOCK DIAGRAM CONFIGURATION OF TEST SYSTEM

For Radiated Test Cases

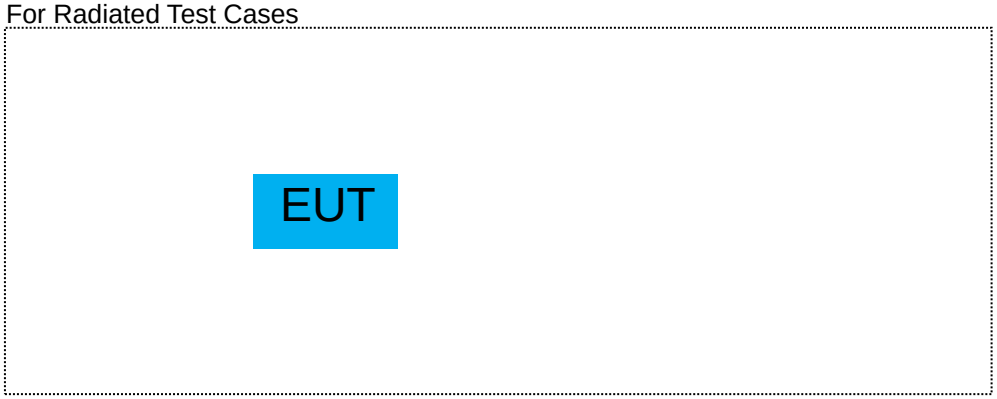


For RF Conducted Test Cases

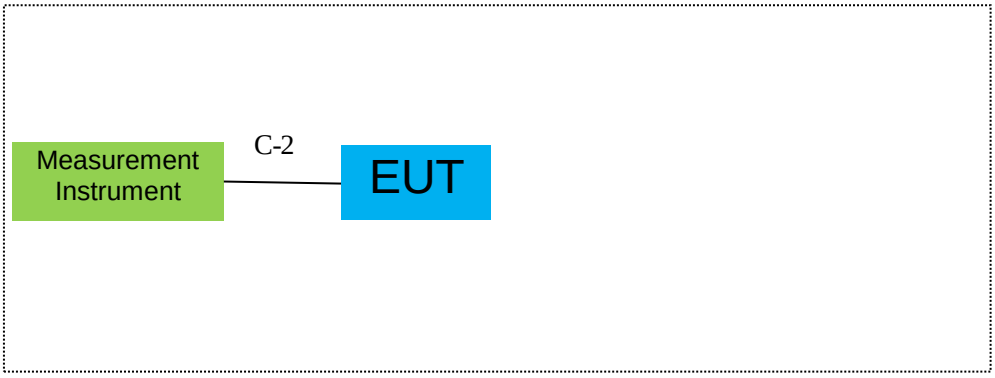


Note: The temporary antenna connector is soldered on the PCB board in order to perform conducted tests and this temporary antenna connector is listed in the equipment list.

## 6.2 SUPPORT EQUIPMENT

The EUT has been tested as an independent unit together with other necessary accessories or support units. The following support units or accessories were used to form a representative test configuration during the tests.

| Item | Equipment | Manufacturer | Model/Type No. | Series No. | Note |
|---|---|---|---|---|---|
| AE-1 | PR-4 4-Channel/6-Track Compact Audio Recorder | Aputure Imaging Industries Co., Ltd. | PR-4 | N/A | EUT |
| | | | | | |
| | | | | | |
| | | | | | |

| Item | Cable Type | Shielded Type | Ferrite Core | Length |
|---|---|---|---|---|
| C-1 | RF Cable | YES | NO | 0.1m |
| | | | | |
| | | | | |

**Notes:**

(1) The support equipment was authorized by Declaration of Confirmation.
(2) For detachable type I/O cable should be specified the length in cm in『Length』column.
(3) “YES” is means “shielded” “with core”; “NO” is means “unshielded” “without core”.

## 6.3 EQUIPMENTS LIST FOR ALL TEST ITEMS

Radiation& Conducted Test equipment

| Item | Kind of Equipment | Manufacturer | Type No. | Serial No. | Last calibration | Calibrated until | Calibration period |
|---|---|---|---|---|---|---|---|
| 1 | Spectrum Analyzer | Agilent | E4440A | MY41000130 | 2025.04.24 | 2026.04.23 | 1 year |
| 2 | Spectrum Analyzer | Agilent | N9020A | MY49100060 | 2025.04.17 | 2026.04.16 | 1 year |
| 3 | Spectrum Analyzer | R&S | FSV40 | 101417 | 2025.04.17 | 2026.04.16 | 1 year |
| 4 | Test Receiver | R&S | ESPI7 | 101318 | 2025.04.17 | 2026.04.16 | 1 year |
| 5 | Bilog Antenna | TESEQ | CBL6111D | 31216 | 2025.04.17 | 2026.04.16 | 1 year |
| 6 | 50Ω Coaxial Switch | Anritsu | MP59B | 6200983705 | 2024.04.26 | 2027.04.25 | 3 year |
| 7 | Horn Antenna | EM | EM-AH-10180 | 2011071402 | 2024.05.12 | 2027.05.11 | 3 year |
| 8 | Broadband Horn Antenna | SCHWARZBECK | BBHA 9170 | 803 | 2024.05.12 | 2027.05.11 | 3 year |
| 9 | Amplifier | EMC | EMC051835SE | 980246 | 2025.04.17 | 2026.04.16 | 1 year |
| 10 | Active Loop Antenna | SCHWARZBECK | FMZB 1519 B | 055 | 2024.05.17 | 2027.05.16 | 3 year |
| 11 | Power Meter | DARE | RPR3006W | 15I00041SNO84 | 2025.04.17 | 2026.04.16 | 1 year |
| 12 | Test Cable (9KHz-30MHz) | N/A | R-01 | N/A | 2023.05.06 | 2026.05.05 | 3 year |
| 13 | Test Cable (30MHz-1GHz) | N/A | R-02 | N/A | 2023.05.06 | 2026.05.05 | 3 year |
| 14 | High Test Cable(1G-40GHz) | N/A | R-03 | N/A | 2023.05.06 | 2026.05.05 | 3 year |
| 15 | Filter | TRILTHIC | 2400MHz | 29 | 2024.04.26 | 2027.04.25 | 3 year |
| 16 | temporary antenna connector (Note) | NTS | R001 | N/A | N/A | N/A | N/A |
| 17 | Log-Periodic Antenna | SCHWARZBECK | VULB 9162 | 584 | 2025.04.19 | 2026.04.18 | 1 year |

Note:
We will use the temporary antenna connector (soldered on the PCB board) When conducted test
And this temporary antenna connector is listed within the instrument list

AC Conduction Test equipment

| Item | Kind of Equipment | Manufacturer | Type No. | Serial No. | Last calibration | Calibrated until | Calibration period |
|---|---|---|---|---|---|---|---|
| 1 | Test Receiver | R&S | ESCI | 101160 | 2025.04.17 | 2026.04.16 | 1 year |
| 2 | LISN | R&S | ENV216 | 101313 | 2025.04.16 | 2026.04.15 | 1 year |
| 3 | LISN | SCHWARZBECK | NNLK 8129 | 8129245 | 2025.04.16 | 2026.04.15 | 1 year |
| 4 | 50Ω Coaxial Switch | ANRITSU CORP | MP59B | 6200983704 | 2024.04.26 | 2027.04.25 | 3 year |
| 5 | Test Cable (9KHz-30MHz) | N/A | C01 | N/A | 2023.05.06 | 2026.05.05 | 3 year |
| 6 | Test Cable (9KHz-30MHz) | N/A | C02 | N/A | 2023.05.06 | 2026.05.05 | 3 year |
| 7 | Test Cable (9KHz-30MHz) | N/A | C03 | N/A | 2023.05.06 | 2026.05.05 | 3 year |

Note: Each piece of equipment is scheduled for calibration once a year except the Aux Equipment & Test Cable which is scheduled for calibration every 2 or 3 years.

Measurement Software

| Item | Manufacturer | Software Name | Software Version | Description |
|---|---|---|---|---|
| 1 | MWRFtest | MTS 8310 2.4GHz/5GHz | 2.0 | RF Conducted Test |
| 2 | Farad | EZ-EMC_RE | AIT-03A | RadiatedTest |
| 3 | raditeq | RadiMation | 2023.1.3 | RadiatedTest |

# 7 TEST REQUIREMENTS

## 7.1 CONDUCTED EMISSIONS TEST

### 7.1.1 Applicable Standard

According to FCC Part 15.207(a)

### 7.1.2 Conformance Limit

| Frequency(MHz) | Conducted Emission Limit | |
|---|---|---|
| | Quasi-peak | Average |
| 0.15-0.5 | 66-56* | 56-46* |
| 0.5-5.0 | 56 | 46 |
| 5.0-30.0 | 60 | 50 |

Note: 1. *Decreases with the logarithm of the frequency
2. The lower limit shall apply at the transition frequencies
3. The limit decreases in line with the logarithm of the frequency in the range of 0.15 to 0.50MHz.

### 7.1.3 Measuring Instruments

The Measuring equipment is listed in the section 6.3 of this test report.

### 7.1.4 Test Configuration

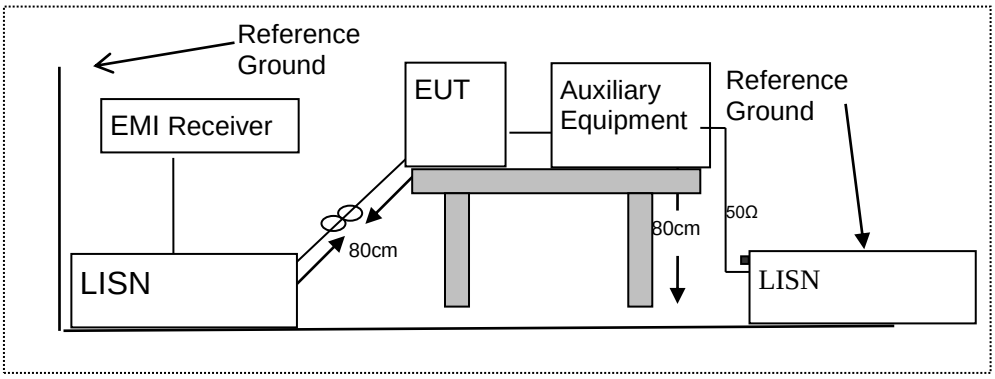


### 7.1.5 Test Procedure

According to the requirements in Section 13.1.4.1 of ANSI C63.10-2020 Conducted emissions the EUT measured in the frequency range between 0.15 MHz and 30 MHz using CISPR Quasi-Peak and average detector mode.

1. The EUT was placed 0.4 meter from the conducting wall of the shielding room.
2. The EUT was placed on a table which is 0.8m above ground plane.
3. Connect EUT to the power mains through a line impedance stabilization network (LISN). All other support equipments powered from additional LISN(s). The LISN provide 50 Ohm/ 50uH of coupling impedance for the measuring instrument.
4. Interconnecting cables that hang closer than 40 cm to the ground plane shall be folded back and forth in the center forming a bundle 30 to 40cm long.
5. I/O cables that are not connected to a peripheral shall be bundled in the center. The end of the cable may be terminated, if required, using the correct terminating impedance. The overall length shall not exceed 1 m.
6. LISN at least 80 cm from nearest part of EUT chassis.
7. The frequency range from 150KHz to 30MHz was searched.
8. Set the test-receiver system to Peak Detect Function and specified bandwidth(IF bandwidth=9KHz) with Maximum Hold Mode
9. For the actual test configuration, please refer to the related Item –EUT Test Photos.

### 7.1.6 Test Results

| | | | |
|---|---|---|---|
| EUT： | PR-4 4-Channel/6-Track Compact Audio Recorder | Model Name ： | PR-4 |
| Temperature： | 25.3℃ | Relative Humidity： | 54% |
| Pressure： | 1010hPa | Phase : | N/A |
| Test Voltage ： | N/A | Test Mode： | N/A |

Note: Not Applicable.

## 7.2 RADIATED SPURIOUS EMISSION

### 7.2.1 Applicable Standard

**According to FCC Part 15.247(d) &15.209 &15.205 and ANSI C63.10-2020**

### 7.2.2 Conformance Limit

According to FCC Part 15.247(d): radiated emissions which fall in the restricted bands, as defined in §15.205(a), must also comply with the radiated emission limits specified in §15.209(a) (see §15.205(c)).
According to FCC Part15.205, Restricted bands

| MHz | MHz | MHz | GHz |
|---|---|---|---|
| 0.090-0.110 | 16.42-16.423 | 399.9-410 | 4.5-5.15 |
| 0.495-0.505 | 16.69475-16.69525 | 608-614 | 5.35-5.46 |
| 2.1735-2.1905 | 16.80425-16.80475 | 960-1240 | 7.25-7.75 |
| 4.125-4.128 | 25.5-25.67 | 1300-1427 | 8.025-8.5 |
| 4.17725-4.17775 | 37.5-38.25 | 1435-1626.5 | 9.0-9.2 |
| 4.20725-4.20775 | 73-74.6 | 1645.5-1646.5 | 9.3-9.5 |
| 6.215-6.218 | 74.8-75.2 | 1660-1710 | 10.6-12.7 |
| 6.26775-6.26825 | 123-138 | 2200-2300 | 14.47-14.5 |
| 8.291-8.294 | 149.9-150.05 | 2310-2390 | 15.35-16.2 |
| 8.362-8.366 | 156.52475-156.52525 | 2483.5-2500 | 17.7-21.4 |
| 8.37625-8.38675 | 156.7-156.9 | 2690-2900 | 22.01-23.12 |
| 8.41425-8.41475 | 162.0125-167.17 | 3260-3267 | 23.6-24.0 |
| 12.29-12.293 | 167.72-173.2 | 3332-3339 | 31.2-31.8 |
| 12.51975-12.52025 | 240-285 | 3345.8-3358 | 36.43-36.5 |
| 12.57675-12.57725 | 322-335.4 | 3600-4400 | (2) |
| 13.36-13.41 | | | |

20dBc in any 100 kHz bandwidth outside the operating frequency band. In case the emission fall within the restricted band specified on 15.205(a), then the 15.209(a) limit in the table below has to be followed.

| Restricted Frequency(MHz) | Field Strength (μV/m) | Field Strength (dBμV/m) | Measurement Distance |
|---|---|---|---|
| 0.009~0.490 | 2400/F(KHz) | 20 log (uV/m) | 300 |
| 0.490~1.705 | 24000/F(KHz) | 20 log (uV/m) | 30 |
| 1.705~30.0 | 30 | 29.5 | 30 |
| 30-88 | 100 | 40 | 3 |
| 88-216 | 150 | 43.5 | 3 |
| 216-960 | 200 | 46 | 3 |
| Above 960 | 500 | 54 | 3 |

Limits of Radiated Emission Measurement(Above 1000MHz)

| Frequency(MHz) | Class B (dBuV/m) (at 3M) | |
|---|---|---|
| | PEAK | AVERAGE |
| Above 1000 | 74 | 54 |

Remark :1. Emission level in dBuV/m=20 log (uV/m)
2. Measurement was performed at an antenna to the closed point of EUT distance of meters.
3. For Frequency 9kHz~30MHz: Distance extrapolation factor =40log(Specific distance/ test distance)(dB); Limit line=Specific limits(dBuV) + distance extrapolation factor.
For Frequency above 30MHz: Distance extrapolation factor =20log(Specific distance/ test distance)(dB);

Limit line=Specific limits(dBuV) + distance extrapolation factor.

### 7.2.3 Measuring Instruments

The Measuring equipment is listed in the section 6.3 of this test report.

### 7.2.4 Test Configuration

(a) For radiated emissions below 30MHz

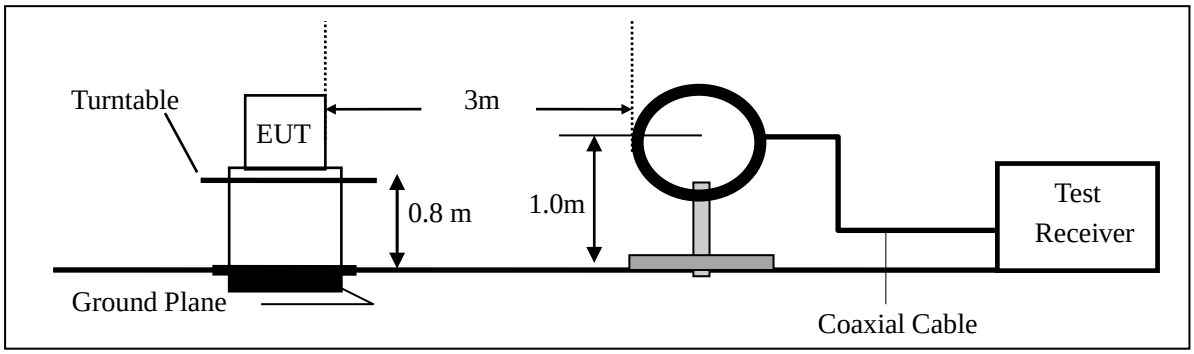


(b) For radiated emissions from 30MHz to 1000MHz

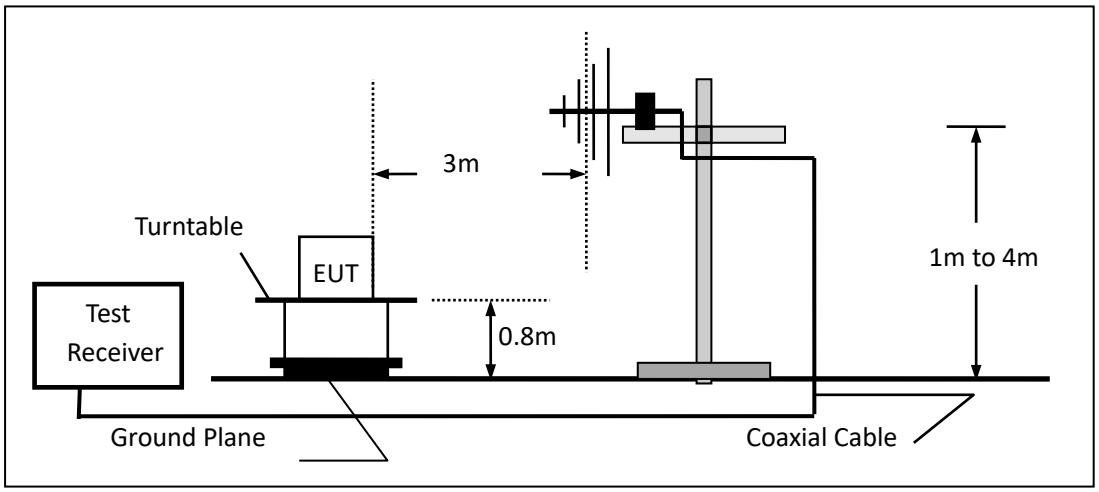


(c) For radiated emissions above 1000MHz

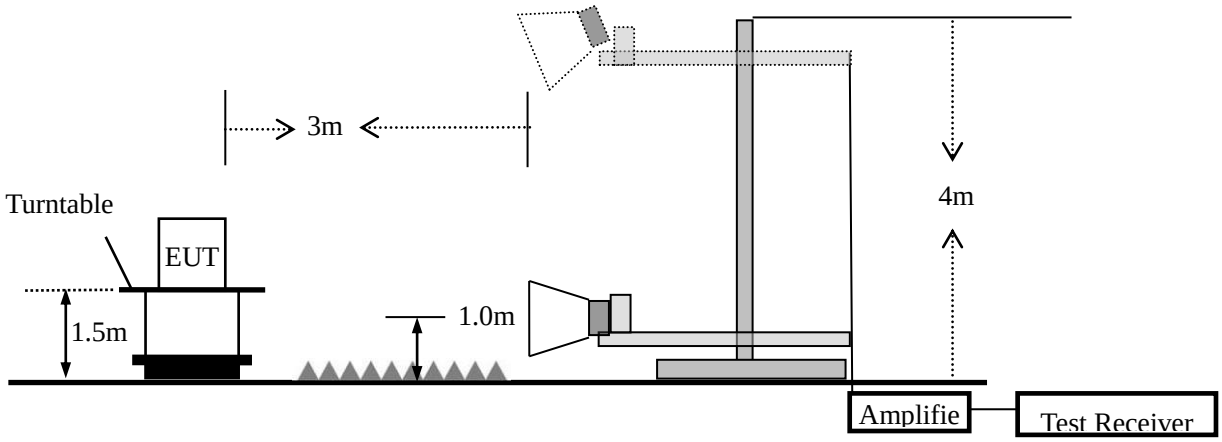

### 7.2.5 Test Procedure

The test site semi-anechoic chamber has met the requirement of NSA tolerance 4 dB according to the standards: ANSI C63.10-2020. The test distance is 3m.The setup is according to the requirements in Section 13.1.4.1 of ANSI C63.10-2020 and CAN/CSA-CEI/IEC CISPR 22.
This test is required for any spurious emission that falls in a Restricted Band, as defined in Section 15.205. It must be performed with the highest gain of each type of antenna proposed for use with the EUT.
Use the following spectrum analyzer settings:

| Spectrum Parameter | Setting |
|---|---|
| Attenuation | Auto |
| Start Frequency | 1000 MHz |
| Stop Frequency | 10th carrier harmonic |
| RB / VB (emission in restricted band) | 1 MHz / 1 MHz for Peak, 1 MHz / 1MHz for Average |

| Receiver Parameter | Setting |
|---|---|
| Attenuation | Auto |
| Start ~ Stop Frequency | 9kHz~150kHz / RB 200Hz for QP |
| Start ~ Stop Frequency | 150kHz~30MHz / RB 9kHz for QP |
| Start ~ Stop Frequency | 30MHz~1000MHz / RB 120kHz for QP |

a. The measuring distance of at 3 m shall be used for measurements at frequency up to 1GHz. For frequencies above 1GHz, any suitable measuring distance may be used.
b. The EUT was placed on the top of a rotating table 0.8 m for below 1GHz and 1.5m for above 1GHz the ground at a 3 meter. The table was rotated 360 degrees to determine the position of the highest radiation.
c. The height of the equipment or of the substitution antenna shall be 0.8 m for below 1GHz and 1.5m for above 1GHz; the height of the test antenna shall vary between 1 m to 4 m. Both horizontal and vertical polarizations of the antenna are set to make the measurement.
d. For the radiated emission test above 1GHz:
Place the measurement antenna away from each area of the EUT determined to be a source of emissions at the specified measurement distance, while keeping the measurement antenna aimed at the source of emissions at each frequency of significant emissions, with polarization oriented for maximum response. The measurement antenna may have to be higher or lower than the EUT, depending on the radiation pattern of the emission and staying aimed at the emission source for receiving the maximum signal. The final measurement antenna elevation shall be that which maximizes the emissions. The measurement antenna elevation for maximum emissions shall be restricted to a range of heights of from 1 m to 4 m above the ground or reference ground plane.
e. The initial step in collecting conducted emission data is a spectrum analyzer peak detector mode pre-scanning the measurement frequency range. Significant peaks are then marked and then Quasi Peak detector mode re-measured.
f. If the Peak Mode measured value compliance with and lower than Quasi Peak Mode Limit, the EUT shall be deemed to meet QP Limits and then no additional QP Mode measurement performed.
g. For the actual test configuration, please refer to the related Item –EUT Test Photos.

Note:

Both horizontal and vertical antenna polarities were tested
and performed pretest to three orthogonal axis. The worst case emissions were reported

During the radiated emission test, the Spectrum Analyzer was set with the following configurations:

| Frequency Band (MHz) | Function | Resolution bandwidth | Video Bandwidth |
|---|---|---|---|
| 30 to 1000 | QP | 120 kHz | 300 kHz |
| Above 1000 | Peak | 1 MHz | 1 MHz |
| | Average | 1 MHz | 1 MHz |

Note: for the frequency ranges below 30 MHz, a narrower RBW is used for these ranges but the measured value should add a RBW correction factor (RBWCF) where RBWCF [dB] =10*lg(100 [kHz]/narrower RBW [kHz]). , the narrower RBW is 1 kHz and RBWCF is 20 dB for the frequency 9 kHz to 150 kHz, and the narrower RBW is 10 kHz and RBWCF is 10 dB for the frequency 150 kHz to 30 MHz.

### 7.2.6 Test Results

■ Spurious Emission below 30MHz (9KHz to 30MHz)

| | | | |
|---|---|---|---|
| EUT: | PR-4 4-Channel/6-Track Compact Audio Recorder | Model No.: | PR-4 |
| Temperature: | 25 ℃ | Relative Humidity: | 56% |
| Test Mode: | Mode1/Mode2/Mode3/ Mode4 | Test By: | Kieron Luo |

| Freq. (MHz) | Ant.Pol. H/V | Emission Level(dBuV/m) | | Limit 3m(dBuV/m) | | Over(dB) | |
|---|---|---|---|---|---|---|---|
| | | PK | AV | PK | AV | PK | AV |
| -- | -- | -- | -- | -- | -- | -- | -- |

Note: the amplitude of spurious emission that is attenuated by more than 20dB below the permissible limit has no need to be reported.

■ Spurious Emission below 1GHz (30MHz to 1GHz)
All the modulation modes have been tested, and the worst result was report as below:

| | | | |
|---|---|---|---|
| EUT： | PR-4 4-Channel/6-Track Compact Audio Recorder | Model Name ： | PR-4 |
| Temperature： | 25.4℃ | Relative Humidity： | 53% |
| Pressure： | 1010hPa | Test Mode： | Mode 1 |
| Test Voltage ： | DC 3.7V | | |

| Polar (H/V) | Frequency (MHz) | Meter Reading (dBuV) | Factor (dB) | Emission Level (dBuV/m) | Limits (dBuV/m) | Margin (dB) | Remark |
|---|---|---|---|---|---|---|---|
| V | 49.1870 | 14.79 | 20.13 | 34.92 | 40.00 | -5.08 | peak |
| V | 61.5620 | 11.09 | 18.75 | 29.84 | 40.00 | -10.16 | peak |
| V | 103.4419 | 6.08 | 18.12 | 24.20 | 43.50 | -19.30 | peak |
| V | 169.0050 | 16.42 | 15.45 | 31.87 | 43.50 | -11.63 | peak |
| V | 199.9860 | 15.24 | 17.73 | 32.97 | 43.50 | -10.53 | peak |
| V | 275.1570 | 8.88 | 19.80 | 28.68 | 46.00 | -17.32 | peak |

**Remark:**
Emission Level= Meter Reading+ Factor, Margin= Emission Level - Limit

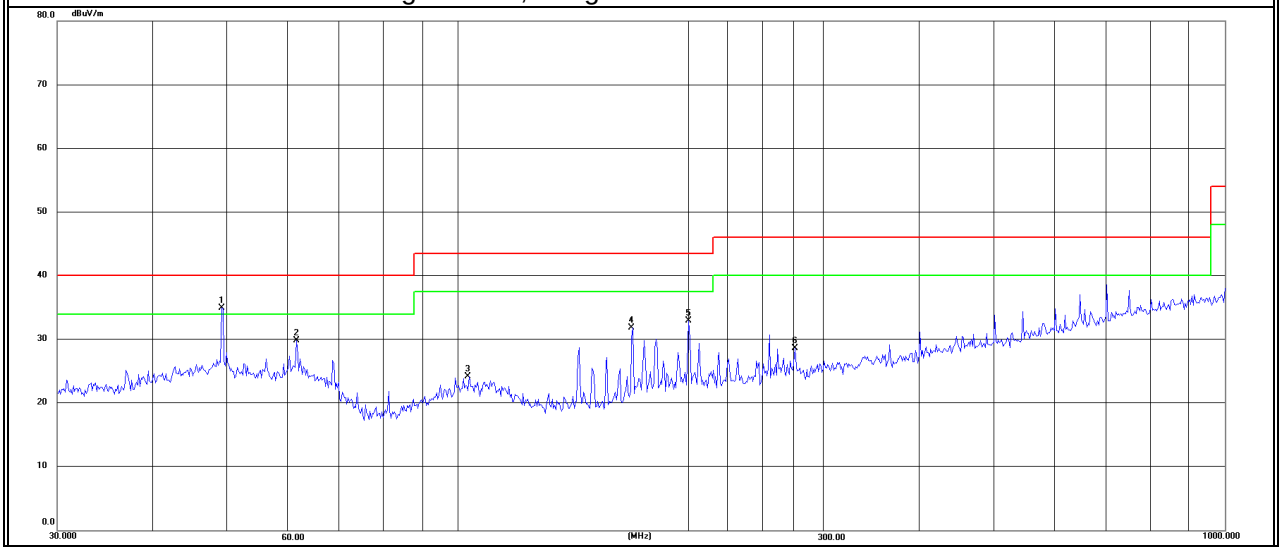

| Polar (H/V) | Frequency (MHz) | Meter Reading (dBuV) | Factor (dB) | Emission Level (dBuV/m) | Limits (dBuV/m) | Margin (dB) | Remark |
|---|---|---|---|---|---|---|---|
| H | 143.8300 | 12.47 | 14.78 | 27.25 | 43.50 | -16.25 | peak |
| H | 169.0050 | 14.99 | 15.45 | 30.44 | 43.50 | -13.06 | peak |
| H | 181.2830 | 15.27 | 16.16 | 31.43 | 43.50 | -12.07 | peak |
| H | 199.9860 | 15.39 | 17.73 | 33.12 | 43.50 | -10.38 | peak |
| H | 300.3670 | 12.22 | 20.19 | 32.41 | 46.00 | -13.59 | peak |
| H | 601.4270 | 11.60 | 26.01 | 37.61 | 46.00 | -8.39 | peak |

**Remark:**
Emission Level= Meter Reading+ Factor, Margin= Emission Level - Limit

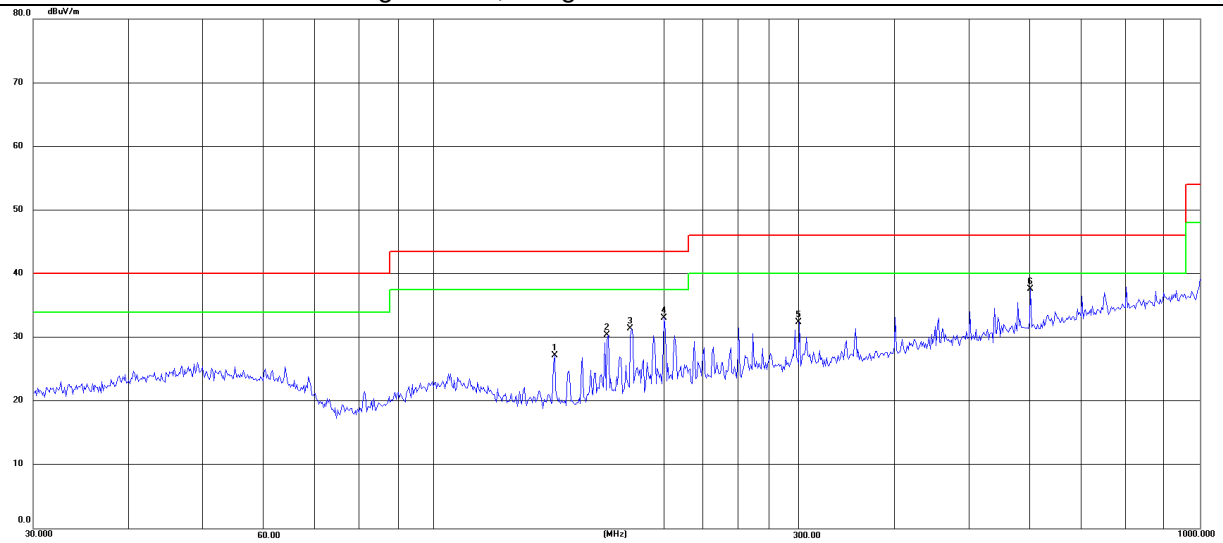

■ Spurious Emission Above 1GHz (1GHz to 25GHz)

| | | | |
|---|---|---|---|
| EUT: | PR-4 4-Channel/6-Track Compact Audio Recorder | Model No.: | PR-4 |
| Temperature: | 25 ℃ | Relative Humidity: | 56% |
| Test Mode: | Mode2 | Test By: | Kieron Luo |

| Frequency | Read Level | Cable loss | Antenna Factor | Preamp Factor | Emission Level | Limits | Margin | Remark | Comment |
|---|---|---|---|---|---|---|---|---|---|
| (MHz) | (dBμV) | (dB) | dB/m | (dB) | (dBμV/m) | (dBμV/m) | (dB) | | |
| Channel (2440 MHz)(GFSK)--Above 1G | | | | | | | | | |
| 4880 | 55.58 | 5.21 | 35.66 | 44.20 | 52.25 | 74.00 | -21.75 | Pk | Vertical |
| 4880 | 44.54 | 5.21 | 35.66 | 44.20 | 41.21 | 54.00 | -12.79 | AV | Vertical |
| 9760 | 57.66 | 8.52 | 36.50 | 44.43 | 58.25 | 74.00 | -15.75 | Pk | Vertical |
| 9760 | 46.78 | 8.52 | 36.50 | 44.43 | 47.37 | 54.00 | -6.63 | AV | Vertical |
| 4880 | 54.05 | 5.21 | 35.66 | 44.20 | 50.72 | 74.00 | -23.28 | Pk | Horizontal |
| 4880 | 43.97 | 5.21 | 35.66 | 44.20 | 40.64 | 54.00 | -13.36 | AV | Horizontal |
| 9760 | 55.52 | 8.52 | 36.50 | 44.43 | 56.11 | 74.00 | -17.89 | Pk | Horizontal |
| 9760 | 44.28 | 8.52 | 36.50 | 44.43 | 44.87 | 54.00 | -9.13 | AV | Horizontal |

Note:

(1) Emission Level= Antenna Factor + Cable Loss + Read Level - Preamp Factor
(2)All other emissions more than 20dB below the limit.
(3)Only the worst data is recorded in the report, the data rates (1Mbps for GFSK modulation) test result is the worst

■ Spurious Emission in Restricted Band 2310-2390MHz and 2483.5-2500MHz

| | | | |
|---|---|---|---|
| EUT: | PR-4 4-Channel/6-Track Compact Audio Recorder | Model No.: | PR-4 |
| Temperature: | 25 ℃ | Relative Humidity: | 56% |
| Test Mode: | Mode2 | Test By: | Kieron Luo |

| Frequency | Meter Reading | Cable Loss | Antenna Factor | Preamp Factor | Emission Level | Limits | Margin | Detector | Comment |
|---|---|---|---|---|---|---|---|---|---|
| (MHz) | (dBμV) | (dB) | dB/m | (dB) | (dBμV/m) | (dBμV/m) | (dB) | Type | |
| Channel (2440 MHz)(GFSK)--Above 1G | | | | | | | | | |
| 2310.00 | 49.02 | 2.97 | 27.80 | 43.80 | 35.99 | 74 | -38.01 | Pk | Horizontal |
| 2310.00 | 40.14 | 2.97 | 27.80 | 43.80 | 27.11 | 54 | -26.89 | AV | Horizontal |
| 2310.00 | 50.10 | 2.97 | 27.80 | 43.80 | 37.07 | 74 | -36.93 | Pk | Vertical |
| 2310.00 | 40.06 | 2.97 | 27.80 | 43.80 | 27.03 | 54 | -26.97 | AV | Vertical |
| 2390.00 | 50.52 | 3.14 | 27.21 | 43.80 | 37.07 | 74 | -36.93 | Pk | Vertical |
| 2390.00 | 41.09 | 3.14 | 27.21 | 43.80 | 27.64 | 54 | -26.36 | AV | Vertical |
| 2390.00 | 52.82 | 3.14 | 27.21 | 43.80 | 39.37 | 74 | -34.63 | Pk | Horizontal |
| 2390.00 | 41.78 | 3.14 | 27.21 | 43.80 | 28.33 | 54 | -25.67 | AV | Horizontal |
| 2483.50 | 53.28 | 3.58 | 27.70 | 44.00 | 40.56 | 74 | -33.44 | Pk | Vertical |
| 2483.50 | 41.95 | 3.58 | 27.70 | 44.00 | 29.23 | 54 | -24.77 | AV | Vertical |
| 2483.50 | 52.61 | 3.58 | 27.70 | 44.00 | 39.89 | 74 | -34.11 | Pk | Horizontal |
| 2483.50 | 41.21 | 3.58 | 27.70 | 44.00 | 28.49 | 54 | -25.51 | AV | Horizontal |
| 2500.00 | 50.51 | 5.9 | 27.70 | 45.10 | 39.01 | 74 | -34.99 | Pk | Vertical |
| 2500.00 | 38.19 | 5.9 | 27.70 | 45.10 | 26.69 | 54 | -27.31 | AV | Vertical |
| 2500.00 | 49.38 | 5.9 | 27.70 | 45.10 | 37.88 | 74 | -36.12 | Pk | Horizontal |
| 2500.00 | 37.41 | 5.9 | 27.70 | 45.10 | 25.91 | 54 | -28.09 | AV | Horizontal |

Note: (1) All other emissions more than 20dB below the limit.
(2)Only the worst data is recorded in the report, the data rates (1Mbps for GFSK modulation) test result is the worst

■ Spurious Emission in Restricted Band 3260MHz-18000MHz

| | | | |
|---|---|---|---|
| EUT: | PR-4 4-Channel/6-Track Compact Audio Recorder | Model No.: | PR-4 |
| Temperature: | 25 ℃ | Relative Humidity: | 56% |
| Test Mode: | Mode2 | Test By: | Kieron Luo |

| Frequency | Reading Level | Cable Loss | Antenna Factor | Preamp Factor | Emission Level | Limits | Margin | Detector | Comment |
|---|---|---|---|---|---|---|---|---|---|
| (MHz) | (dBμV) | (dB) | dB/m | (dB) | (dBμV/m) | (dBμV/m) | (dB) | Type | |
| 3260 | 53.53 | 4.04 | 29.57 | 44.70 | 42.44 | 74 | -31.56 | Pk | Vertical |
| 3260 | 40.49 | 4.04 | 29.57 | 44.70 | 29.40 | 54 | -24.60 | AV | Vertical |
| 3260 | 52.82 | 4.04 | 29.57 | 44.70 | 41.73 | 74 | -32.27 | Pk | Horizontal |
| 3260 | 40.76 | 4.04 | 29.57 | 44.70 | 29.67 | 54 | -24.33 | AV | Horizontal |
| 3332 | 53.46 | 4.26 | 29.87 | 44.40 | 43.19 | 74 | -30.81 | Pk | Vertical |
| 3332 | 41.20 | 4.26 | 29.87 | 44.40 | 30.93 | 54 | -23.07 | AV | Vertical |
| 3332 | 53.14 | 4.26 | 29.87 | 44.40 | 42.87 | 74 | -31.13 | Pk | Horizontal |
| 3332 | 40.71 | 4.26 | 29.87 | 44.40 | 30.44 | 54 | -23.56 | AV | Horizontal |
| 17797 | 41.71 | 10.99 | 43.95 | 43.50 | 53.15 | 74 | -20.85 | Pk | Vertical |
| 17797 | 31.18 | 10.99 | 43.95 | 43.50 | 42.62 | 54 | -11.38 | AV | Vertical |
| 17788 | 42.13 | 11.81 | 43.69 | 44.60 | 53.03 | 74 | -20.97 | Pk | Horizontal |
| 17788 | 31.79 | 11.81 | 43.69 | 44.60 | 42.69 | 54 | -11.31 | AV | Horizontal |

Note: (1) All other emissions more than 20dB below the limit.
(2)Only the worst data is recorded in the report, the data rates (1Mbps for GFSK modulation) test result is the worst

## 7.3 6DB BANDWIDTH

### 7.3.1 Applicable Standard

According to FCC Part 15.247(a)(2) and KDB 558074 D01 15.247 Meas Guidance v05r02 Section 8.2.

### 7.3.2 Conformance Limit

The minimum permissible 6dB bandwidth is 500 kHz.

### 7.3.3 Measuring Instruments

The Measuring equipment is listed in the section 6.3 of this test report.

### 7.3.4 Test Setup

Please refer to Section 6.1 of this test report.

### 7.3.5 Test Procedure

The testing follows Subclause 11.8 of ANSI C63.10
The RF output of EUT was connected to the spectrum analyzer by RF cable and attenuator.
The path loss was compensated to the results for each measurement.
Set to the maximum power setting and enable the EUT transmit continuously.
The EUT was operating in controlled its channel.
Use the following spectrum analyzer settings:
a) Set RBW = shall be in the range of 1% to 5% of the OBW but not less than 100 kHz.
b) Set the VBW ≥ [3 × RBW].
c) Detector = peak.
d) Trace mode = max-hold.
e) Sweep = No faster than coupled (auto) time.
f) Allow the trace to stabilize.
g) Measure the maximum width of the emission by placing two markers, one at the lowest frequency and the other at the highest frequency of the envelope of the spectral display, such that each marker is at or slightly below the “−6 dB down amplitude”. If a marker is below this “−6 dB down amplitude” value, then it shall be as close as possible to this value.

### 7.3.6 Test Results

| | | | |
|---|---|---|---|
| EUT: | PR-4 4-Channel/6-Track Compact Audio Recorder | Model No.: | PR-4 |
| Temperature: | 25 ℃ | Relative Humidity: | 56% |
| Test Mode: | Mode2 | Test By: | Kieron Luo |

Test data reference attachment.

## 7.4 DUTY CYCLE

### 7.4.1 Applicable Standard

According to KDB 558074 D01 15.247 Meas Guidance v05r02s Section 6.

### 7.4.2 Conformance Limit

No limit requirement.

### 7.4.3 Measuring Instruments

The Measuring equipment is listed in the section 6.3 of this test report.

### 7.4.4 Test Setup

Please refer to Section 6.1 of this test report.

### 7.4.5 Test Procedure

The zero-span mode on a spectrum analyzer or EMI receiver if the response time and spacing between bins on the sweep are sufficient to permit accurate measurements of the on and off times of the transmitted signal. Set the center frequency of the instrument to the center frequency of the transmission. Set RBW ≥ OBW if possible; otherwise, set RBW to the largest available value. Set VBW ≥ RBW. Set detector = peak or average. The zero-span measurement method shall not be used unless both RBW and VBW are > 50/T and the number of sweep points across duration T exceeds 100. (For example, if VBW and/or RBW are limited to 3 MHz, then the zero-span method of measuring duty cycle shall not be used if T ≤ 16.7 microseconds.)

The transmitter output is connected to the Spectrum Analyzer. We tested accroding to the zero-span measurement method, 6.0)b) in KDB 558074

The largest availble value of RBW is 8 MHz and VBW is 50 MHz. The zero-span method of measuring duty cycle shall not be used if T ≤ 6.25 microseconds. (50/6.25 = 8)

The zero-span method was used because all measured T data are > 6.25 microseconds and both RBW and VBW are > 50/T.

The RF output of EUT was connected to the spectrum analyzer by RF cable and attenuator.
The path loss was compensated to the results for each measurement.
Set to the maximum power setting and enable the EUT transmit continuously.
The EUT was operating in controlled its channel.
Use the following spectrum analyzer settings:
Span = Zero Span
RBW = 10MHz(the largest available value)
VBW = 10MHz (≥ RBW)
Number of points in Sweep >100
Detector function = peak
Trace = Clear write
Measure $T_{total}$ and $T_{on}$
Calculate Duty Cycle = $T_{on}$ / $T_{total}$

### 7.4.6 Test Results

| | | | |
|---|---|---|---|
| EUT: | PR-4 4-Channel/6-Track Compact Audio Recorder | Model No.: | PR-4 |
| Temperature: | 25 ℃ | Relative Humidity: | 56% |
| Test Mode: | N/A | Test By: | N/A |

Test data reference attachment.

## 7.5 PEAK OUTPUT POWER

### 7.5.1 Applicable Standard

According to FCC Part 15.247(b)(3) and KDB 558074 D01 15.247 Meas Guidance v05r02 Section 8.3.1.

### 7.5.2 Conformance Limit

The maximum peak conducted output power of the intentional radiator for systems using digital modulation in the 2400 - 2483.5 MHz bands shall not exceed: 1 Watt (30dBm). If transmitting antenna of directional gain greater than 6dBi is used, the peak output power from the intentional radiator shall be reduced below the above stated value by the amount in dB that the directional gain of the antenna exceeds 6 dBi. In case of point-to-point operation, the limit has to be reduced by 1dB for every 3dB that the directional gain of the antenna exceeds 6dBi.

### 7.5.3 Measuring Instruments

The Measuring equipment is listed in the section 6.3 of this test report.

### 7.5.4 Test Setup

Please refer to Section 6.1 of this test report.

### 7.5.5 Test Procedure

The testing follows Subclause 11.9.1.1 of ANSI C63.10
The RF output of EUT was connected to the spectrum analyzer by RF cable and attenuator.
The path loss was compensated to the results for each measurement.
Set to the maximum power setting and enable the EUT transmit continuously.
The EUT was operating in controlled its channel.
Use the following spectrum analyzer settings:
Set the RBW ≧DTS bandwidth.
Set VBW =3*RBW.
Set the span ≧3*RBW
Set Sweep time = auto couple.
Set Detector = peak.
Set Trace mode = max hold.
Allow trace to fully stabilize.
Use peak marker function to determine the peak amplitude level.

### 7.5.6 Test Results

| | | | |
|---|---|---|---|
| EUT: | PR-4 4-Channel/6-Track Compact Audio Recorder | Model No.: | PR-4 |
| Temperature: | 20 ℃ | Relative Humidity: | 48% |
| Test Mode: | Mode2 | Test By: | Kieron Luo |

Test data reference attachment.

## 7.6 POWER SPECTRAL DENSITY

### 7.6.1 Applicable Standard

According to FCC Part 15.247(e) and KDB 558074 D01 15.247 Meas Guidance v05r02 Section 8.4.

### 7.6.2 Conformance Limit

The transmitter power spectral density conducted from the transmitter to the antenna shall not be greater than 8 dBm in any 3 kHz band during any time interval of continuous transmission.

### 7.6.3 Measuring Instruments

The Measuring equipment is listed in the section 6.3 of this test report.

### 7.6.4 Test Setup

Please refer to Section 6.1 of this test report.

### 7.6.5 Test Procedure

The testing follows Measurement Procedure Subclause 11.10.2 of ANSI C63.10
This procedure shall be used if maximum peak conducted output power was used to demonstrate compliance, and is optional if the maximum conducted (average) output power was used to demonstrate compliance.

The RF output of EUT was connected to the spectrum analyzer by RF cable and attenuator.
The path loss was compensated to the results for each measurement.
Set to the maximum power setting and enable the EUT transmit continuously.
The EUT was operating in controlled its channel.
a) Set analyzer center frequency to DTS channel center frequency.
b) Set the span to 1.5*DTS bandwidth.
c) Set the RBW to: 3 kHz ≤ RBW ≤ 100 kHz.
d) Set the VBW ≥ 3 RBW.
e) Detector = peak.
f) Sweep time = auto couple.
g) Trace mode = max hold.
h) Allow trace to fully stabilize.
i) Use the peak marker function to determine the maximum amplitude level within the RBW.
j) If measured value exceeds limit, reduce RBW (no less than 3 kHz) and repeat.

### 7.6.6 Test Results

| | | | |
|---|---|---|---|
| EUT: | PR-4 4-Channel/6-Track Compact Audio Recorder | Model No.: | PR-4 |
| Temperature: | 25 ℃ | Relative Humidity: | 56% |
| Test Mode: | Mode2 | Test By: | Kieron Luo |

Test data reference attachment.

## 7.7 CONDUCTED BAND EDGE MEASUREMENT

### 7.7.1 Applicable Standard

According to FCC Part 15.247(d) and KDB 558074 D01 15.247 Meas Guidance v05r02 Section 8.7.

### 7.7.2 Conformance Limit

In any 100 kHz bandwidth outside the frequency band in which the spread spectrum or digitally modulated intentional radiator is operating, the radio frequency power that is produced by the intentional radiator shall be at least 20 dB below that in the 100 kHz bandwidth within the band that contains the highest level of the desired power, based on either an RF conducted or a radiated measurement, provided the transmitter demonstrates compliance with the peak conducted power limits. If the transmitter complies with the conducted power limits based on the use of RMS averaging over a time interval, as permitted under paragraph (b)(3) of this section, the attenuation required under this paragraph shall be 30 dB instead of 20 dB.

### 7.7.3 Measuring Instruments

The Measuring equipment is listed in the section 6.3 of this test report.

### 7.7.4 Test Setup

Please refer to Section 6.1 of this test report.

### 7.7.5 Test Procedure

The testing follows FCC KDB 558074 D01 15.247 Meas Guidance v05r02 Section 8.7.
The RF output of EUT was connected to the spectrum analyzer by RF cable and attenuator.
The path loss was compensated to the results for each measurement.
Set to the maximum power setting and enable the EUT transmit continuously.
The EUT was operating in controlled its channel.
Set RBW to 100 kHz and VBW of spectrum analyzer to 300 kHz with a convenient frequency span including 100 kHz bandwidth from band edge.
Measure the highest amplitude appearing on spectral display and set it as a reference level. Plot the graph with marking the highest point and edge frequency.
Repeat above procedures until all measured frequencies were complete.

### 7.7.6 Test Results

| | | | |
|---|---|---|---|
| EUT: | PR-4 4-Channel/6-Track Compact Audio Recorder | Model No.: | PR-4 |
| Temperature: | 25 ℃ | Relative Humidity: | 56% |
| Test Mode: | Mode2 | Test By: | Kieron Luo |

Test data reference attachment.

## 7.8 SPURIOUS RF CONDUCTED EMISSIONS

### 7.8.1 Conformance Limit

1. Below -20dB of the highest emission level in operating band.
2. Fall in the restricted bands listed in section 15.205. The maximum permitted average field strength is listed in section 15.209.

### 7.8.2 Measuring Instruments

The Measuring equipment is listed in the section 6.3 of this test report.

### 7.8.3 Test Setup

Please refer to Section 6.1 of this test report.

### 7.8.4 Test Procedure

The Spurious RF conducted emissions compliance of RF radiated emission should be measured by following the guidance in ANSI C63.10-2020 with respect to maximizing the emission by rotating the EUT, measuring the emission while the EUT is situated in three orthogonal planes (if appropriate), adjusting the measurement antenna height and polarization etc. Set RBW=100kHz and VBW= 300KHz to measure the peak field strength , and measure frequency range from 30MHz to 26.5GHz.

### 7.8.5 Test Results

Remark: The measurement frequency range is from 30MHz to the 10th harmonic of the fundamental frequency. The lowest, middle and highest channels are tested to verify the spurious emissions and bandege measurement data.

Test data reference attachment.

## 7.9 ANTENNA APPLICATION

### 7.9.1 Antenna Requirement

15.203 requirement: For intentional device, according to 15.203: an intentional radiator shall be designed to ensure that no antenna other than that furnished by the responsible party shall be used with the device.

### 7.9.2 Result

The EUT antenna is permanent attached Ceramic antenna (Gain: 1.3 dBi). It comply with the standard requirement.

# 8 TEST RESULTS

## 8.1 CONDUCTED OUTPUT POWER

**Test Result**

| Mode | Channel | Peak Output Power (dBm) | Peak Output Power (mW) | Max. Avg. Power (dBm) | Limit (dBm) | Result |
|---|---|---|---|---|---|---|
| GFSK 1M | 0 | 2.20 | 1.66 | None | ≤30 | PASS |

**Test Graphs**

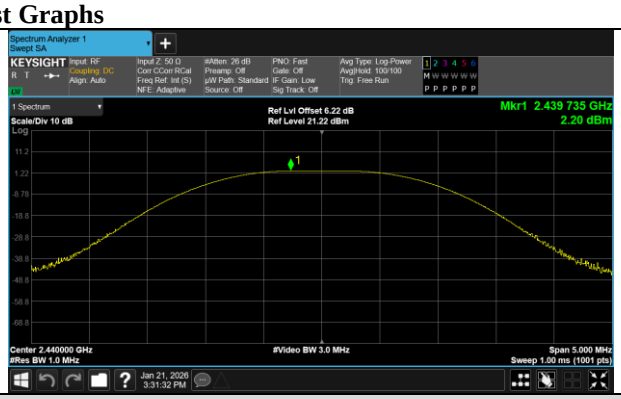


Peak Output Power
GFSK 1M_Channel 0

## 8.2 99% BANDWIDTH

**Test Result**

| Mode | Channel | Center Frequency (MHz) | 99% BW (MHz) |
|---|---|---|---|
| GFSK 1M | 0 | 2440 | 1.0233 |

**Test Graphs**

GFSK 1M_Channel 0

## 8.3 6dB Bandwidth

**Test Result**

| Mode | Channel | Center Frequency (MHz) | 6 dB Bandwidth (MHz) | Limit (MHz) | Result |
|---|---|---|---|---|---|
| GFSK 1M | 0 | 2440 | 0.6640 | ≥0.5 | PASS |

**Test Graphs**

GFSK 1M_Channel 0

## 8.4 CONDUCTED SPURIOUS & BAND EDGE EMISSION

**Test Result**

| Mode | Channel | OOB Emission Frequency (MHz) | OOB Emission Level (dBm) | Limit (dBm) | Over Limit (dB) | Result |
|---|---|---|---|---|---|---|
| GFSK 1M | 0 | 2643.73 | -55.761 | -17.93 | -37.831 | PASS |
| Note: input compensation coeffcient (dB)= Cable Loss (dB) | | | | | | |

**Test Graphs**

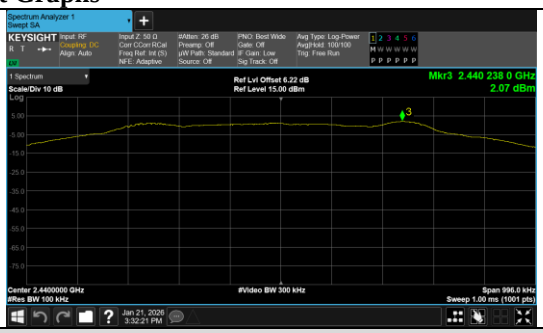


In-Band Reference Level
GFSK 1M_Channel 0

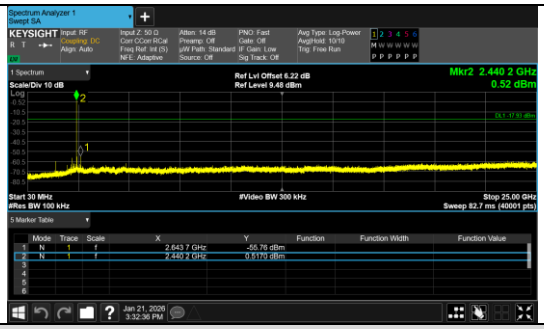


30.0 MHz - 25000.0 MHz
GFSK 1M_Channel 0

## 8.5 DUTY CYCLE

**Test Result**

| Mode | Channel | On Time (ms) | Period (ms) | Duty Cycle (%) | Duty Cycle (linear) | Duty Cycle Factor (dB) | 1/T |
|---|---|---|---|---|---|---|---|
| GFSK 2M | 0 | 0.828 | 1.488 | 55.65 | 0.5565 | 2.5453 | 1.2077 |

**Test Graphs**

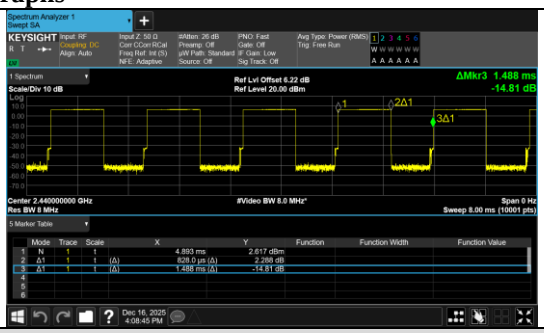


GFSK _Channel 0

## 8.6 POWER SPECTRAL DENSITY

**Test Result**

| Mode | Channel | PSD (dBm/3kHz) | Limit (dBm/3kHz) | Result |
|---|---|---|---|---|
| GFSK 1M | 0 | -14.20 | ≤8 | PASS |

**Test Graphs**

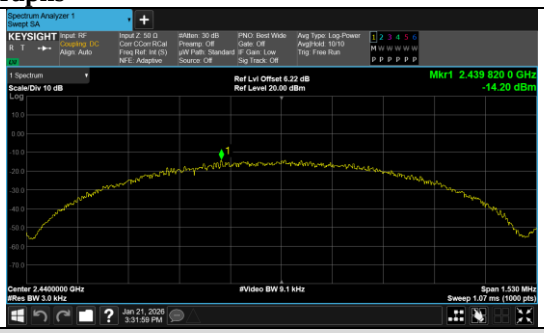


GFSK 1M_Channel 0

END OF REPORT