Willow Run Test Labs, LLC
8501 Beck Road, Building 2227
Belleville, Michigan 48111 USA
Tel: (734) 252-9785
Fax: (734) 926-9785
e-mail: info@wrtest.com

Testing of

Electromagnetic Emissions

per

USA: CFR Title 47, Part 15.247
Canada: IC RSS-210/GEN

are herein reported for

Inspectron, Inc.
CDO150/961D

Test Report No.: 20150126-01
Copyright © 2015

Applicant/Provider:
Inspectron, Inc.
39625 Lewis Drive, Suite 900, Novi Michigan 48377 USA
Phone: +1 (734) 812 6343, Fax: +1 (248) 702 6605
Contact Person: Tye Newman; tnewman@inspectrontools.com

Measured by: Dr. Joseph Brunett, EMC-002790-NE

Report Approved by: Dr. Joseph Brunett, EMC-002790-NE

Report by: Dr. Joseph Brunett, EMC-002790-NE

Report Date of Issue: January 26, 2015

Results of testing completed on (or before) December 26, 2014 are as follows.

Emissions: The transmitter intentional emissions **COMPLY** with the regulatory limit(s) by no less than 21.7 dB. Transmit chain spurious harmonic emissions **COMPLY** by no less than 4.2 dB. Radiated spurious emissions associated with the receive chain of this device **COMPLY** the regulatory limit(s) by no less than 12.7 dB. Unintentional spurious emissions from digital circuitry **COMPLY** with radiated emission limit(s) by more than 5.0 dB. AC Power Line conducted emissions **COMPLY** by more than 8.4 dB.

Contents

1 Test Specifications, General Procedures, and Location **4**
1.1 Test Specification and General Procedures . . . 4
1.2 Test Location and Equipment Used . . . 5

2 Configuration and Identification of the Equipment Under Test **6**
2.1 Description and Declarations . . . 6
2.1.1 EUT Configuration . . . 6
2.1.2 Modes of Operation . . . 6
2.1.3 Variants . . . 7
2.1.4 Test Samples . . . 7
2.1.5 Functional Exerciser . . . 7
2.1.6 Modifications Made . . . 7
2.1.7 Production Intent . . . 8
2.1.8 Declared Exemptions and Additional Product Notes . . . 8

3 Emissions **9**
3.1 General Test Procedures . . . 9
3.1.1 Radiated Test Setup and Procedures . . . 9
3.1.2 Conducted Emissions Test Setup and Procedures . . . 11
3.1.3 Power Supply Variation . . . 11
3.1.4 Thermal Variation . . . 11
3.2 Intentional Emissions . . . 13
3.2.1 Duty and Transmission Cycle, Pulsed Operation . . . 13
3.2.2 Fundamental Emission Bandwidth . . . 15
3.2.3 Effective Isotropic Radiated Power . . . 17
3.2.4 Power Spectral Density . . . 19
3.3 Unintentional Emissions . . . 21
3.3.1 Transmit Chain Spurious Emissions . . . 21
3.3.2 Relative Transmit Chain Spurious Emissions . . . 22
3.3.3 Radiated Receiver Spurious . . . 23
3.3.4 Radiated Digital Spurious . . . 24
3.3.5 Conducted Emissions Test Results - AC Power Port(s) . . . 25

List of Tables

1 Willow Run Test Labs, LLC Equipment List . . . 5
2 EUT Declarations. . . . 6
3 Pulsed Emission Characteristics (Duty Cycle). . . . 13
4 Intentional Emission Bandwidth. . . . 15
5 Radiated Power Results. . . . 17
6 Power Spectral Density Results. . . . 19
7 Transmit Chain Spurious Emissions. . . . 21
8 Receiver Chain Spurious Emissions $\geq$ 30 MHz. . . . 23
9 Radiated Digital Spurious Emissions. . . . 24
10 AC Mains Power Conducted Emissions Results. . . . 25

List of Figures

1 Photos of EUT. . . . 6
2 EUT Test Configuration Diagram. . . . 7
3 Radiated Emissions Diagram of the EUT. . . . 9
4 Radiated Emissions Test Setup Photograph(s). . . . 10
5 Conducted Emissions Setup Diagram of the EUT. . . . 11
6 Conducted Emissions Test Setup Photograph(s). . . . 12
7 Pulsed Emission Characteristics (Duty Cycle). . . . 14
8 Intentional Emission Bandwidth. . . . 16
9 Power Measurement Plots. . . . 18
10 Power Spectral Density Plots. . . . 20
11 Conducted Transmitter Emissions Measured. . . . 22

1 Test Specifications, General Procedures, and Location

1.1 Test Specification and General Procedures

The ultimate goal of Inspectron, Inc. is to demonstrate that the Equipment Under Test (EUT) complies with the Rules and/or Directives below. Detailed in this report are the results of testing the Inspectron, Inc. CDO150/961D for compliance to:

Country/Region	Rules or Directive	Referenced Section(s)
United States	Code of Federal Regulations	CFR Title 47, Part 15.247
Canada	Industry Canada	IC RSS-210/GEN

Inspectron, Inc. has determined that the equipment under test is subject to the rules and directives above at the date of this testing. In conjunction with these rules and directives, the following specifications and procedures are followed herein to demonstrate compliance (in whole or in part) with these regulations.

ANSI C63.4:2009	"Methods of Measurement of Radio-Noise Emissions from Low-Voltage Electrical and Electronic Equipment in the Range of 9 kHz to 40 GHz"
FCC KDB 558074 (2014)	"Guidance for Performing Compliance Measurements on Digital Transmission Systems (DTS) Operating Under 15.247"
FCC KDB 913591 (2007)	"Measurement of radiated emissions at the edge of the band for a Part 15 RF Device"
ICES-003; Issue 5 (2012)	"Information Technology Equipment (ITE) Limits and methods of measurement"
Industry Canada	"The Measurement of Occupied Bandwidth"

1.2 Test Location and Equipment Used

Test Location The EUT was fully tested by **Willow Run Test Labs, LLC**, 8501 Beck Road, Building 2227, Belleville, Michigan 48111 USA. The Test Facility description and attenuation characteristics are on file with the FCC Laboratory, Columbia, Maryland (FCC Reg. No: 688478) and with Industry Canada, Ottawa, ON (File Ref. No: IC 8719A-1).

Test Equipment Pertinent test equipment used for measurements at this facility is listed in Table 1. The quality system employed at Willow Run Test Labs, LLC has been established to ensure all equipment has a clearly identifiable classification, calibration expiry date, and that all calibrations are traceable to the SI through NIST, other recognized national laboratories, accepted fundamental or natural physical constants, ratio type of calibration, or by comparison to consensus standards.

Table 1: Willow Run Test Labs, LLC Equipment List

Description	Manufacturer/Model	SN	Quality Num.	Last Cal By / Date Due
Spectrum Analyzer	Rhode-Schwarz / FSV30	101660	RSFSV30001	RS / Mar-2015
Dipole Set (20-1000 MHz)	EMCO / 3121C	9504-1121	DIPEMC001	Liberty Labs / Sep-2016
Ridge-Horn Antenna	Univ. of Michigan / VVL	5	UMHORN005	UMRL / Jul-2015
L-Band Horn	SA / NRL Std.	001	HRNL001	WRTL / Jul-2015
LS-Band Horn	JEF / NRL Std.	001	HRN15001	WRTL / Jul-2015
S-Band Horn	SA / NRL Std.	1854	HRNS001	WRTL / Jul-2015
C-Band Horn	SA / NRL Std.	-	HRNC001	WRTL / Jul-2015
XN-Band Horn	JEF / NRL Std.	001	HRNXN001	WRTL / Jul-2015
X-Band Horn	JEF / NRL Std.	001	HRNX001	WRTL / Jul-2015
KU-Band Horn	JEF / NRL Std.	001	HRNKU001	WRTL / Jul-2015
K-Band Horn	JEF / NRL Std.	001	HRNK001	WRTL / Jul-2015
Ka-Band Horn	JEF / NRL Std.	001	HRNKA001	WRTL / Jul-2015

2 Configuration and Identification of the Equipment Under Test

2.1 Description and Declarations

The EUT is a 2.4 GHz Digital Spread Spectrum (DSS) commercial video transmitter with camera snake. The EUT is approximately 8 x 6 x 2 in in dimension, and is depicted in Figure 1. It is powered by a 3.7 VDC lithium-ion rechargeable battery. This device is envisioned to be a commercial digitized video transmitter for use in inspection of tubes, hollow bodies, and cavities by a professional tradesman. Table 2 outlines provider declared EUT specifications.

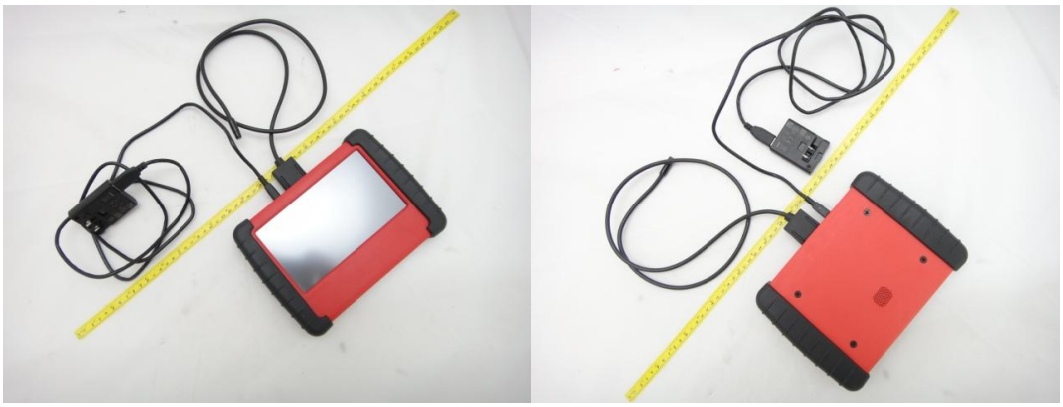

Figure 1: Photos of EUT.

Table 2: EUT Declarations.

General Declarations			
Equipment Type:	DSS Inspection Tool	**Country of Origin:**	USA
Nominal Supply:	3.7 VDC	**Oper. Temp Range:**	-20° C to $+55^o$ C
Frequency Range:	2412 – 2472 MHz	**Antenna Dimension:**	25 mm
Antenna Type:	patch	**Antenna Gain:**	0 dBi (declared)
Number of Channels:	4	**Channel Spacing:**	20 MHz
Alignment Range:	Not Applicable	**Type of Modulation:**	OFDM
United States			
FCC ID Number:	2AADC-INS003	**Classification:**	DSS
Canada			
IC Number:	11124A-INS003	**Classification:**	Spread Spectrum Device, Digital Device

2.1.1 EUT Configuration

The EUT is configured for testing as depicted in Figure 2.

2.1.2 Modes of Operation

The EUT is capable of displaying live video images from the equipped camera snake onto its LCD display or broadcasting these images via its 2.4 GHz DSS radio modem to an ad hoc linked receive device. The EUT is also capable of taking snapshot images or video and storing them to its internal memory drive, which can then later be transferred via USB to a commercial computer. In normal use there is only a single mode of radio operation, as an DSS video transmitter at fixed data rate, as tested.

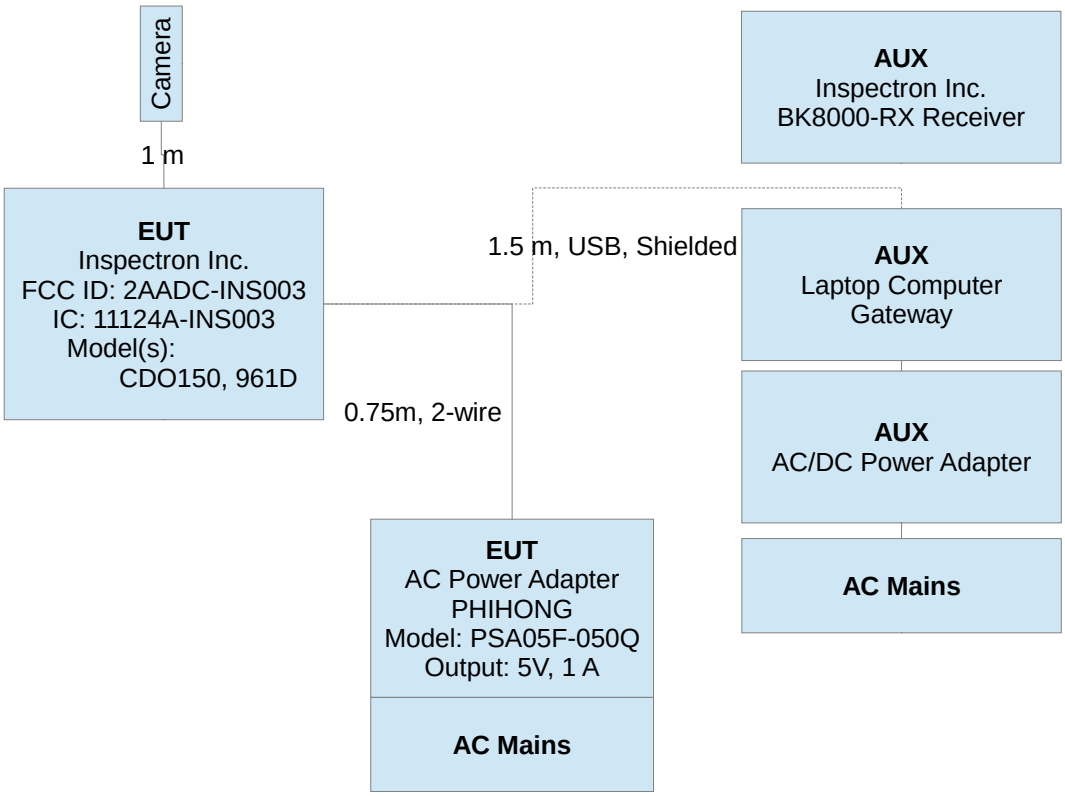

Figure 2: EUT Test Configuration Diagram.

2.1.3 Variants

There are two electrically identical variants of the EUT manufactured for two different tool suppliers, model "CDO150" and model "961D".

2.1.4 Test Samples

Three samples of the EUT were provided for testing: (1) a sample modified for conducted power measurements; (2) a sample with integral antenna; (3) a sample provided for digital emissions measurements. Both radio samples employed custom DSS radio test software, sample (3) was normal operating.

2.1.5 Functional Exerciser

For RF testing, the radio was placed into the maximum possible (continuous) data rate and maximum power setting using custom software provided by the radio manufacturer. The normal operating EUT was tested for functionality as a video camera and a memory storage device during digital emissions testing. Camera performance was monitored by observing the video quality (i.e. color, resolution, etc...) and communication between the camera head, the display, and a separate image receiver. A music file was loaded onto the EUT via USB to a laptop computer. The music file was continuously played via a media player on the laptop (set to continuous play) during testing.

2.1.6 Modifications Made

There were no modifications made to the EUT by this laboratory.

2.1.7 Production Intent

The EUT appears to be a production ready sample.

2.1.8 Declared Exemptions and Additional Product Notes

The EUT employs only single-stream fixed data rate (OFDM-20) ad hoc communication on 4 selectable channels (2412 MHz, 2432 MHz, 2452 MHz, and 2472 MHz). The radio parameters cannot be adjusted by the end user and the EUT communicates only with an associated receiver via an ad hoc connection. This is an expensive product sold only through industrial plumbing outlets for use by trained and certified plumbers. As such, it is subject to digital emissions regulation as a Class A commercial product. The manufacturer states that it will not be sold for use by the general public.

3 Emissions

3.1 General Test Procedures

3.1.1 Radiated Test Setup and Procedures

Radiated electromagnetic emissions from the EUT are first pre-scanned in our shielded anechoic chamber. Spectrum and modulation characteristics of all emissions are recorded. Instrumentation, including spectrum analyzers and other test equipment as detailed in Section 1.2 are employed. After indoor pre-scans, emission measurements are made on our outdoor 3-meter Open Area Test Site (OATS). If the EUT connects to auxiliary equipment and is table or floor standing, the configurations prescribed in relevant test standards are followed. Alternatively, a layout closest to normal use (as declared by the provider) is employed if the resulting emissions appear to be worst-case in such a configuration. See Figure 3. All intentionally radiating elements that are not fixed-mounted in use are placed on the test table lying flat, on their side, and on their end (3-axes) and the resulting worst case emissions are recorded. If the EUT is fixed-mounted in use, measurements are made with the device oriented in the manner consistent with installation and then emissions are recorded.

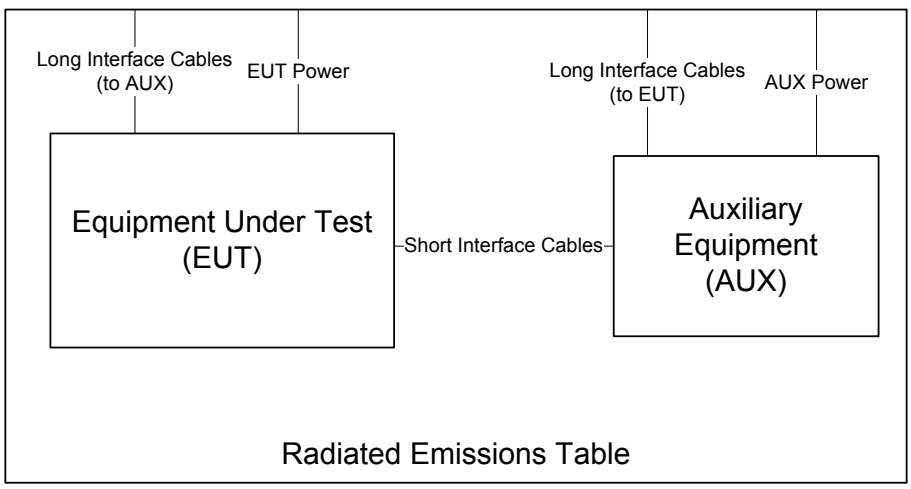

Figure 3: Radiated Emissions Diagram of the EUT.

If the EUT exhibits spurious emissions due to internal receiver circuitry, such emissions are measured with an appropriate carrier signal applied. For devices with intentional emissions below 30 MHz, a shielded loop antenna is used. It is placed at a 1 meter receive height. Emissions between 30 MHz and 1 GHz are measured using tuned dipoles and/or calibrated broadband antennas. For both horizontal and vertical polarizations, the test antenna is raised and lowered from 1 to 4 m in height until a maximum emission level is detected. The EUT is then rotated through 360° in azimuth until the highest emission is detected. The test antenna is then raised and lowered one last time from 1 to 4 m and the worst case value is recorded. Emissions above 1 GHz are characterized using standard gain horn antennas or calibrated broadband ridge-horn antennas on our OATS with a 2.4m x 2.4m square of AN-79 or H-4 absorber placed over the ground screen between the EUT and the test antenna. Care is taken to ensure that test receiver resolution and video bandwidths meet the regulatory requirements, and that the emission bandwidth of the EUT is not reduced. Photographs of the test setup employed are depicted in Figure 4.

Where regulations allow for direct measurement of field strength, power values (dBm) measured on the test receiver / analyzer are converted to dBμV/m at the regulatory distance, using

$$E_{dist} = 107 + P_R + K_A - K_G + K_E - C_F$$

where P_R is the power recorded on spectrum analyzer, in dBm, K_A is the test antenna factor in dB/m, K_G is the combined pre-amplifier gain and cable loss in dB, K_E is duty correction factor (when applicable) in dB, and C_F is a distance conversion (employed only if limits are specified at alternate distance) in dB. This field strength value is then compared with the regulatory limit. If effective isotropic radiated power (EIRP) is computed, it is computed as

$$EIRP(dBm) = E_{3m}(dB\mu V/m) - 95.2.$$

When presenting data at each frequency, the highest measured emission under all possible EUT orientations (3-axes) is reported.

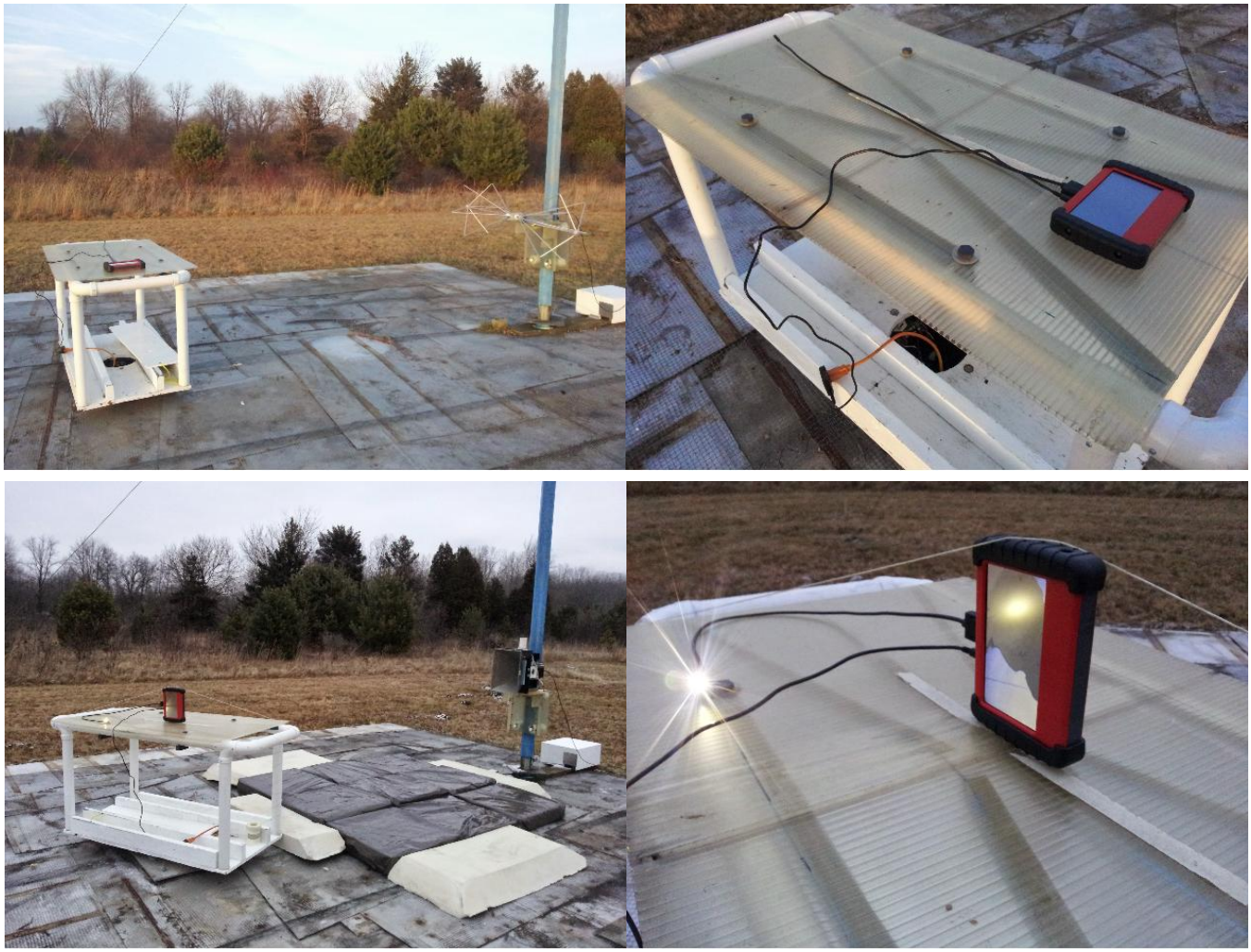

Figure 4: Radiated Emissions Test Setup Photograph(s).

3.1.2 Conducted Emissions Test Setup and Procedures

AC Port Conducted Spurious For this device, AC power line conducted emissions are measured in our screen room. If the EUT connects to auxiliary equipment and is table or floor standing, the configurations prescribed in ANSI C63.4 / CISPR 22 are employed. Alternatively, an on-table layout more representative of actual use may be employed if the resulting emissions appear to be worst-case in such a configuration. See Figure 5. Conducted

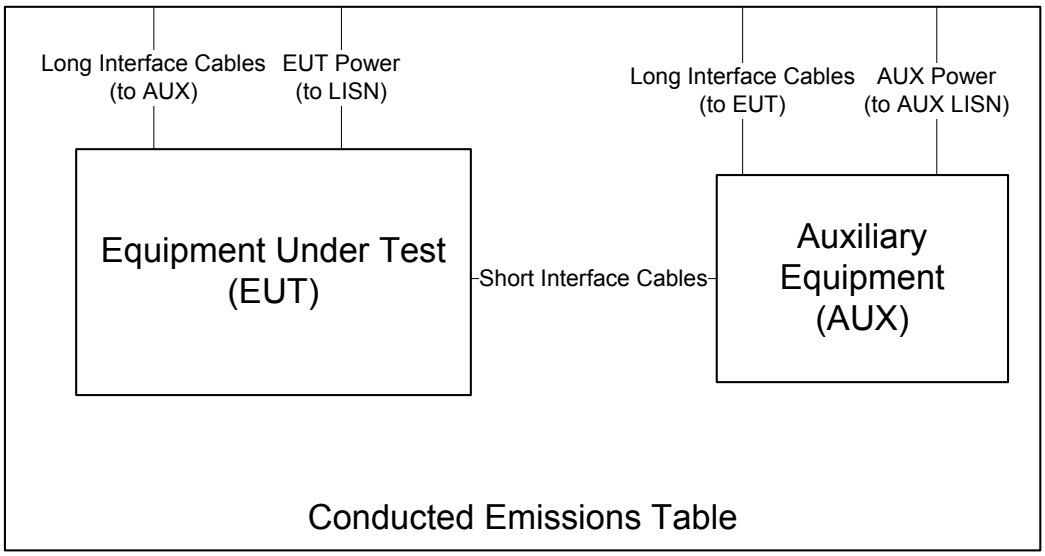

Figure 5: Conducted Emissions Setup Diagram of the EUT.

emissions are measured and recorded for each AC mains power source over the spectrum 0.15 MHz to 30 MHz for both the ungrounded (HI/PHASE) and grounded (LO/GRND) conductors with the EUT placed in its highest current draw operating mode(s). The test receiver is set to peak-hold mode in order to record the peak emissions throughout the course of functional operation. Only if an emission exceeds or is near the limit are quasi-peak and average detection applied. Photographs of the test setup employed are depicted in Figure 6.

3.1.3 Power Supply Variation

Tests at extreme supply voltages are made if required by the the procedures specified in the test standard, and results of this testing are detailed in this report.

In the case of this EUT, measurements of the worst-case radiated emissions are performed with the supply voltage varied by no less than 85% and 115% of the nominal rated value for devices connecting to AC power mains.

In the case the EUT is designed for operation from a battery power source, the extreme test voltages are evaluated over the range specified in the test standard; no less than ±10% of the nominal battery voltage declared by the manufacturer. For all battery operated equipment, worst case intentional and spurious emissions are re-checked employing a new (fully charged) battery.

3.1.4 Thermal Variation

Tests at extreme temperatures are made if required by the procedures specified in the test standard, and results of this testing are detailed in this report. The provider has declared that the EUT is designed for operation over the temperature range -20° C to $+55^o$ C. Before any temperature measurements are made, the equipment is allowed to reach a thermal balance in the test chamber, temperature and humidity are recorded, and thermal balance is verified via a thermocouple based probe.

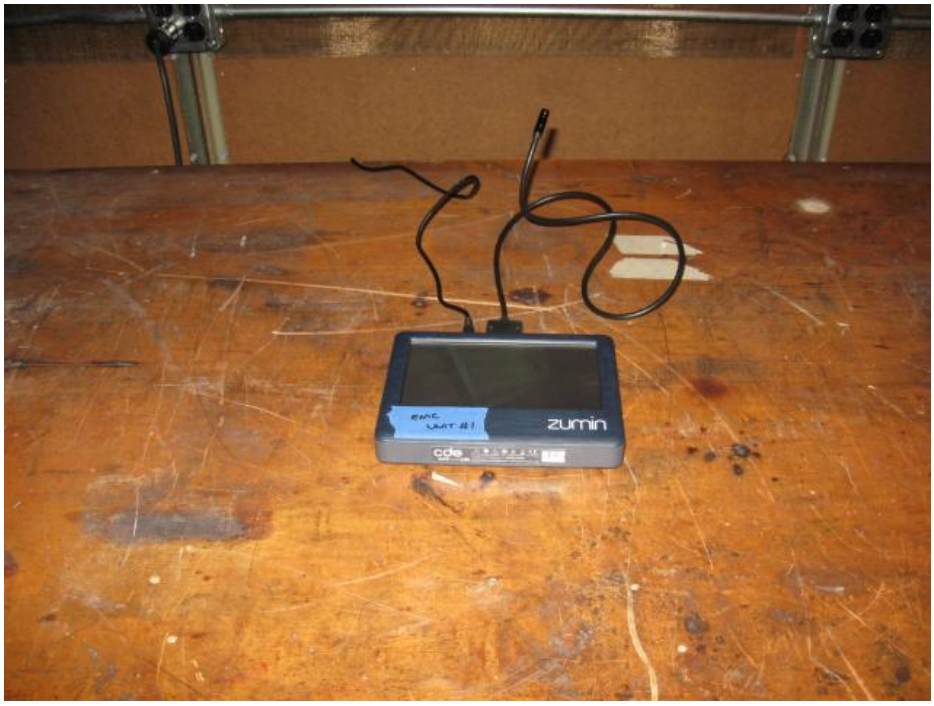

Figure 6: Conducted Emissions Test Setup Photograph(s).

3.2 Intentional Emissions

3.2.1 Duty and Transmission Cycle, Pulsed Operation

The details and results of testing the EUT for pulsed operation are summarized in Table 3. Plots showing the measurements made to obtain these values are provided in Figure 7.

Table 3: Pulsed Emission Characteristics (Duty Cycle).

Frequency Range	**Det**	**IFBW**	**VBW**		
f > 1 000 MHz	Pk	10 MHz	1 MHz	**Test Date:**	10-Dec-14
				Test Engineer:	Joseph Brunett
				EUT	CDO150/961D
				Meas. Distance:	30 cm

Pulsed Operation / Duty Cycle								
Transmit Mode	Symbol Rate (Msym/s)	Data Rate (Mbps)	Voltage (V)	Test Frequency (MHz)	Cycle Time (ms)	On-Time (ms)	Duty Cycle (%)	Duty Correction (dB)
Continuous Modulated (Test Mode)	-	-	3.7	2437.0	100.0	100.0	100.0	0.0

Equipment Used: HRN15001, RSFSV30001

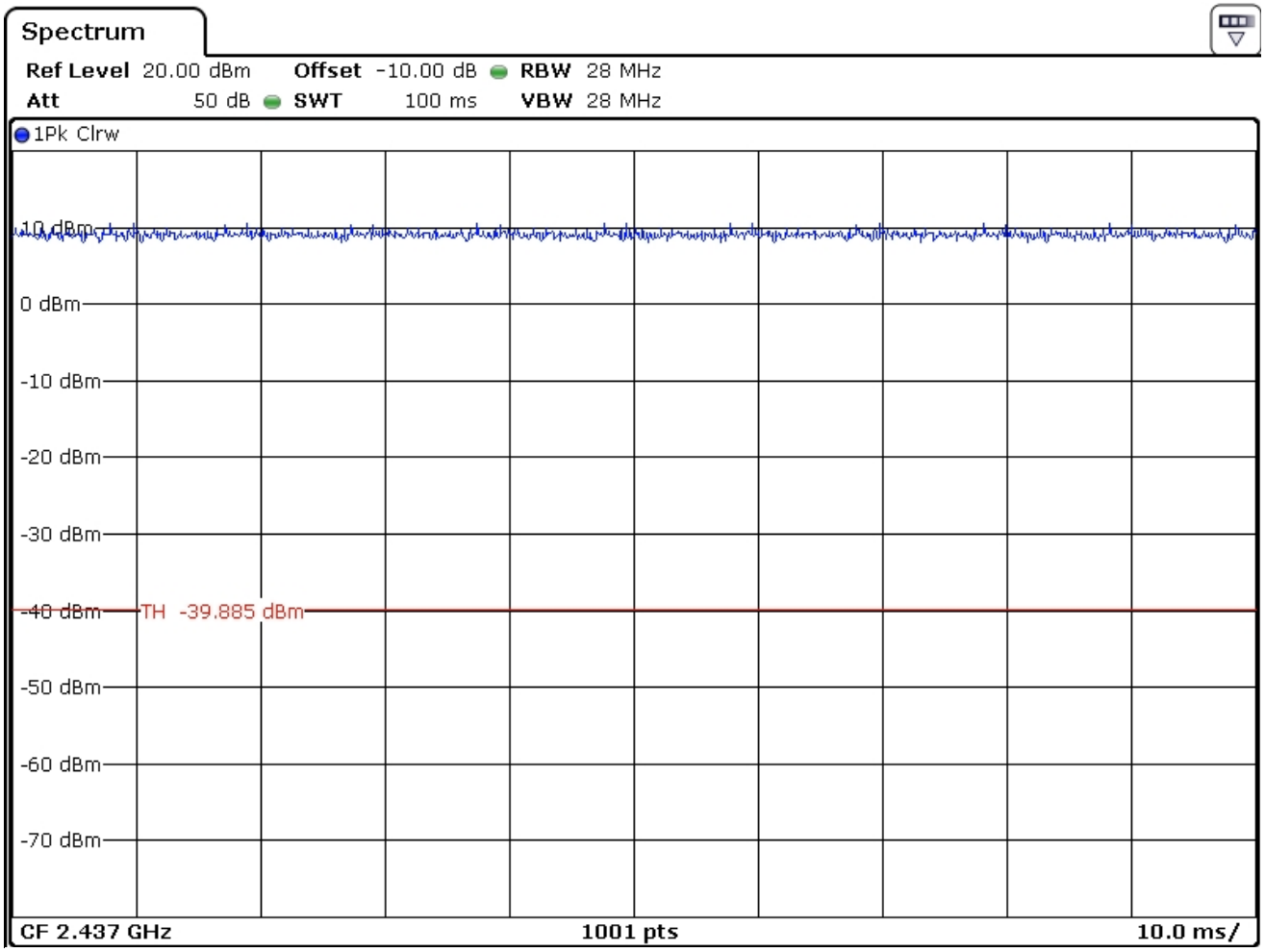

Figure 7: Pulsed Emission Characteristics (Duty Cycle).

3.2.2 Fundamental Emission Bandwidth

Emission bandwidth (EBW) of the EUT is measured with the device placed in the test mode(s) with the shortest available packet length and minimum packet spacing. Radiated emissions are recorded following the test procedures listed in Section 1.1. The 6 dB bandwidth is measured for the lowest, middle, and highest channels available. The 99% emission bandwidth per IC test procedures is also reported.The results of this testing are summarized in Table 4. Plots showing measurements employed obtain the emission bandwidths reported are provided in Figure 8.

Table 4: Intentional Emission Bandwidth.

Frequency Range	**Detector**	**IF Bandwidth**	**Video Bandwidth**	**Test Date:**	10-Dec-14
f > 1 000 MHz	Pk	30 kHz	> 3 x IFBW	**Test Engineer:**	Joseph Brunett
				EUT Mode:	CDO150/961D
Equipment Used: HRN15001, RSFSV30001				**Meas. Distance:**	3m

								FCC/IC
Mode	Data Rate	Channel	Ant. Used	Ant. Pol.	Frequency (MHz)	6 dB BW (MHz)	20 dB BW (MHz)	IC 99% PWR BW (MHz)
Cont. Tx	Continuous	1	Horn LS	H/V	2412.0	16.668	19.092	16.723
		2	Horn LS	H/V	2432.0	16.715	19.03	16.733
		4	Horn LS	H/V	2472.0	16.618	19.07	16.733

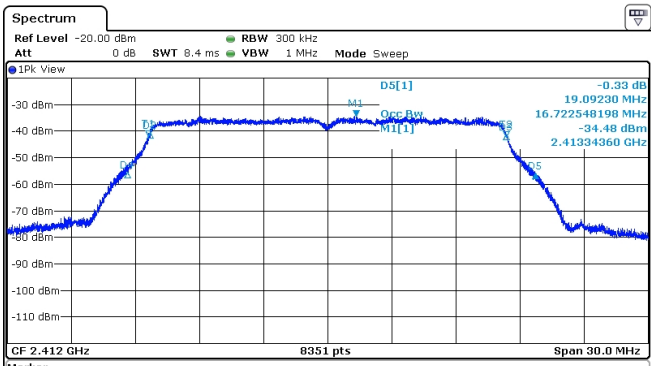

Marker

Type	Ref	Trc	X-value	Y-value	Function	Function Result
M1		1	2.4133436 GHz	-34.48 dBm		
T1		1	2.40362256 GHz	-41.91 dBm	Occ Bw	16.722548198 MHz
T2		1	2.42034511 GHz	-42.23 dBm		
D2	M1	1	-9.6731 MHz	-6.10 dB		
D3	D2	1	16.6675 MHz	-0.67 dB		
D4	M1	1	-10.7221 MHz	-20.88 dB		
D5	D4	1	19.0923 MHz	-0.33 dB		

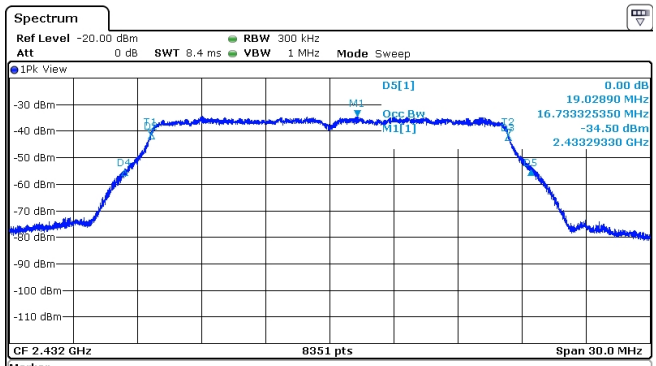

Marker

Type	Ref	Trc	X-value	Y-value	Function	Function Result
M1		1	2.4332933 GHz	-34.50 dBm		
T1		1	2.42360819 GHz	-41.55 dBm	Occ Bw	16.73332535 MHz
T2		1	2.44034152 GHz	-41.39 dBm		
D2	M1	1	-9.6491 MHz	-6.43 dB		
D3	D2	1	16.7154 MHz	-0.44 dB		
D4	M1	1	-10.8957 MHz	-20.10 dB		
D5	D4	1	19.0289 MHz	-0.00 dB		

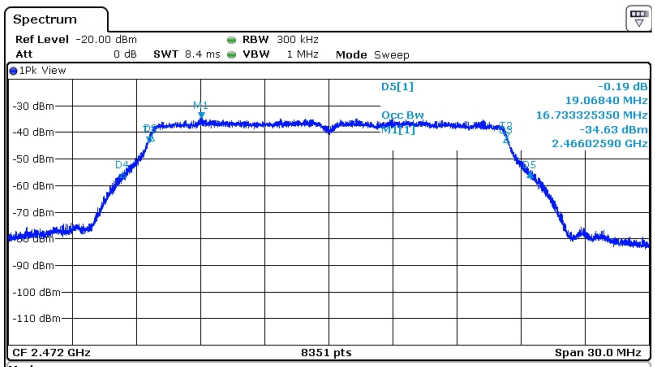

Marker

Type	Ref	Trc	X-value	Y-value	Function	Function Result
M1		1	2.4660259 GHz	-34.63 dBm		
T1		1	2.46359382 GHz	-43.74 dBm	Occ Bw	16.73332535 MHz
T2		1	2.48032715 GHz	-42.32 dBm		
D2	M1	1	-2.3315 MHz	-6.61 dB		
D3	D2	1	16.6184 MHz	-0.32 dB		
D4	M1	1	-3.6822 MHz	-20.19 dB		
D5	D4	1	19.0684 MHz	-0.19 dB		

Figure 8: Intentional Emission Bandwidth.

3.2.3 Effective Isotropic Radiated Power

The EUT's radiated power is computed from field strength measurements made at 3 meters from the EUT. Method AVGSA-1 (trace averaging with the EUT transmitting at full power throughout each sweep) in the FCCs DTS measurement procedures is employed in determining average output power. The results of this testing are summarized in Table 5. Plots showing the measurements made to obtain these values are provided in Figure 9.

Table 5: Radiated Power Results.

Frequency Range	**Det**	**IF Bandwidth**	**Video Bandwidth**	**Test Date:**	10-Dec-14
25 MHz ≤ f ≤ 1 000 MHz	Pk/QPk	120 kHz	300 kHz	**Test Engineer:**	Joseph Brunett
f > 1 000 MHz	Pk/Avg	1 MHz	3 MHz	**EUT:**	CDO150/961D
Equipment Used: HRN15001, RSFSV30001				**Meas. Distance:**	3m

												FCC/IC
Mode	Channel	Freq. MHz	Ant. Used	Ant. Pol.	Pr (Avg)** (dBm)	Ka (dB/m)	Kg (dB)	EIRP (Avg) (dBm)	Pout* (Avg) (dBm)	Calc. Ant Gain (dBi)	EIRP (Avg) Limit (dBm)	Pass (dB)
Cont. Tx.	1	2412.0	Horn LS	H/V	-25.4	21.4	-0.4	8.2	**9.5**	-1.3	30.0	21.8
	2	2432.0	Horn LS	H/V	-25.4	21.5	-0.4	**8.3**	9.3	-1.0	30.0	**21.7**
	4	2472.0	Horn LS	H/V	-25.9	21.7	-0.4	8.0	8.6	**-0.6**	30.0	22.0
Mode	Channel	Freq. MHz	Supply Voltage	Ant. Pol.	Pr ** dBm	Ka dB/m	Kg dB	EIRP (Pk) dBm				
Cont. Tx.	2	2432.0	4.1	H/V	-25.5	21.5	-0.4	8.2				
		2432.0	3.9	H/V	-25.3	21.5	-0.4	8.4				
		2432.0	3.7	H/V	-25.4	21.5	-0.4	8.3				
		2432.0	3.5	H/V	-25.4	21.5	-0.4	8.3				
		2432.0	3.3	H/V	-25.5	21.5	-0.4	8.2				

* Measured conducted from radio port via modified device following FCC's DTS measurement procedures method AVGSA-1.

** Measured radiated at 3 meter distance following FCC's DTS measurement procedures method AVGSA-1.

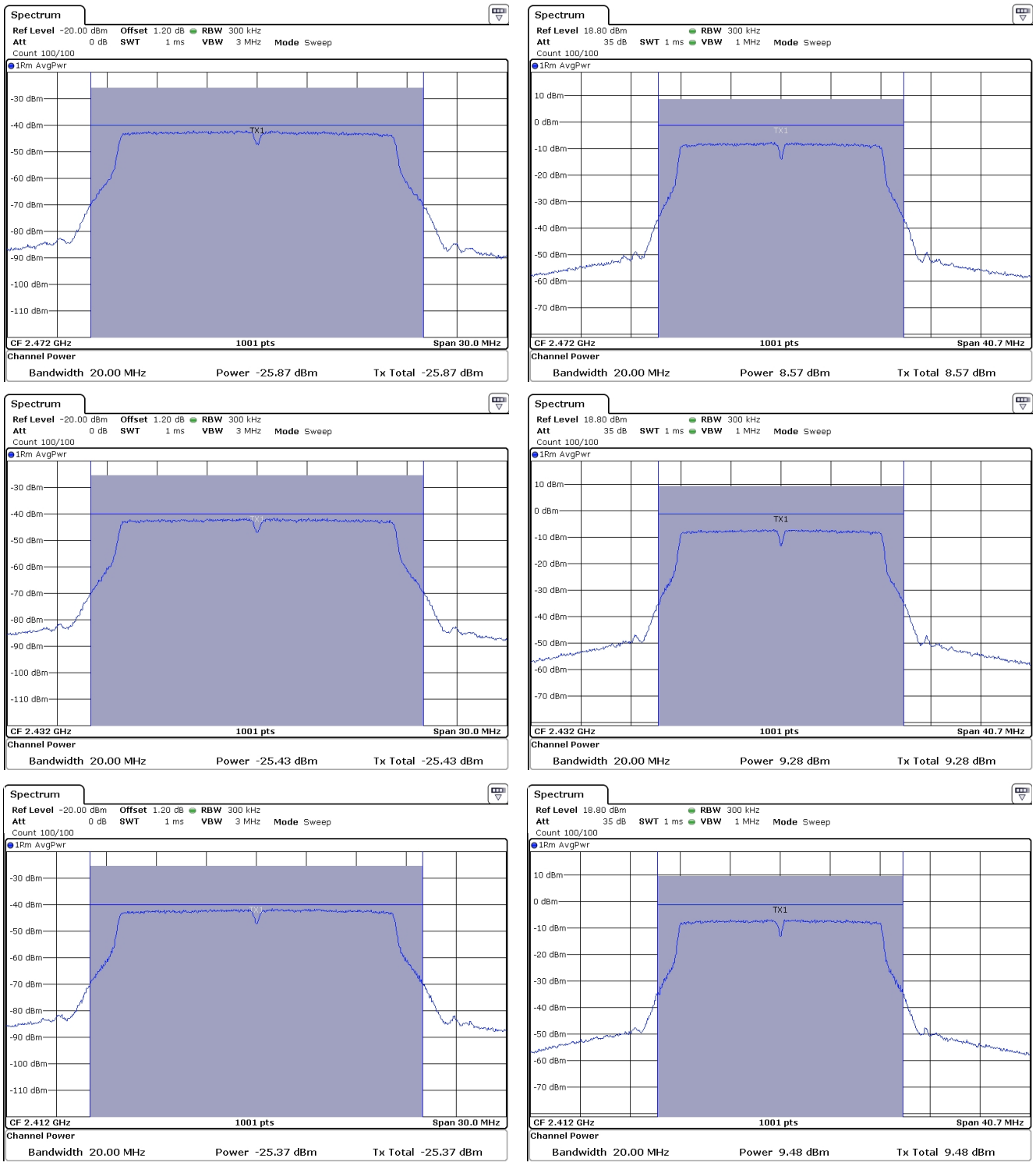

Figure 9: Power Measurement Plots.

3.2.4 Power Spectral Density

For this test, field strength emissions are made at 3 meters with the EUT oriented for maximum emission. The spectrum is first scanned for maximum spectral peaks, the span and receiver bandwidth are then reduced until the power spectral density in field strength is measured in the prescribed receiver bandwidth. A sweep time of 100 seconds is maintained to ensure peak signals are captured in each frequency bin. The results of this testing are summarized in Table 6. Plots showing how these measurements were made are depicted in Figure 10.

Table 6: Power Spectral Density Results.

Frequency Range	**Detector**	**IF Bandwidth**	**Video Bandwidth**	**Test Date:**	10-Dec-14
2400-2483.5	Pk	3 kHz	300 kHz	**Test Engineer:**	Joseph Brunett
				EUT:	CDO150/961D
	Equipment Used: RSFSV30001			**Meas. Distance:**	Conducted

								FCC/IC
Mode	Channel	Frequency (MHz)	Ant. Used	PSDcond (meas)* (dBm/3kHz)	Ant. Gain (dBi)	PSD-EIRP (dBm/3kHz)	PSD Limit (dBm/3kHz)	Pass By (dB)
Continuous Tx.	1	2412.0	Cond.	-23.1	-1.3	-24.40	8.00	32.4
	2	2432.0	Cond.	-23.2	-1.0	-24.20	8.00	32.2
	4	2472.0	Cond.	-24.3	-.6	-24.90	8.00	32.9

* PSD measured conducted out the the EUT antenna port following FCC DTS AVGPSD-1.

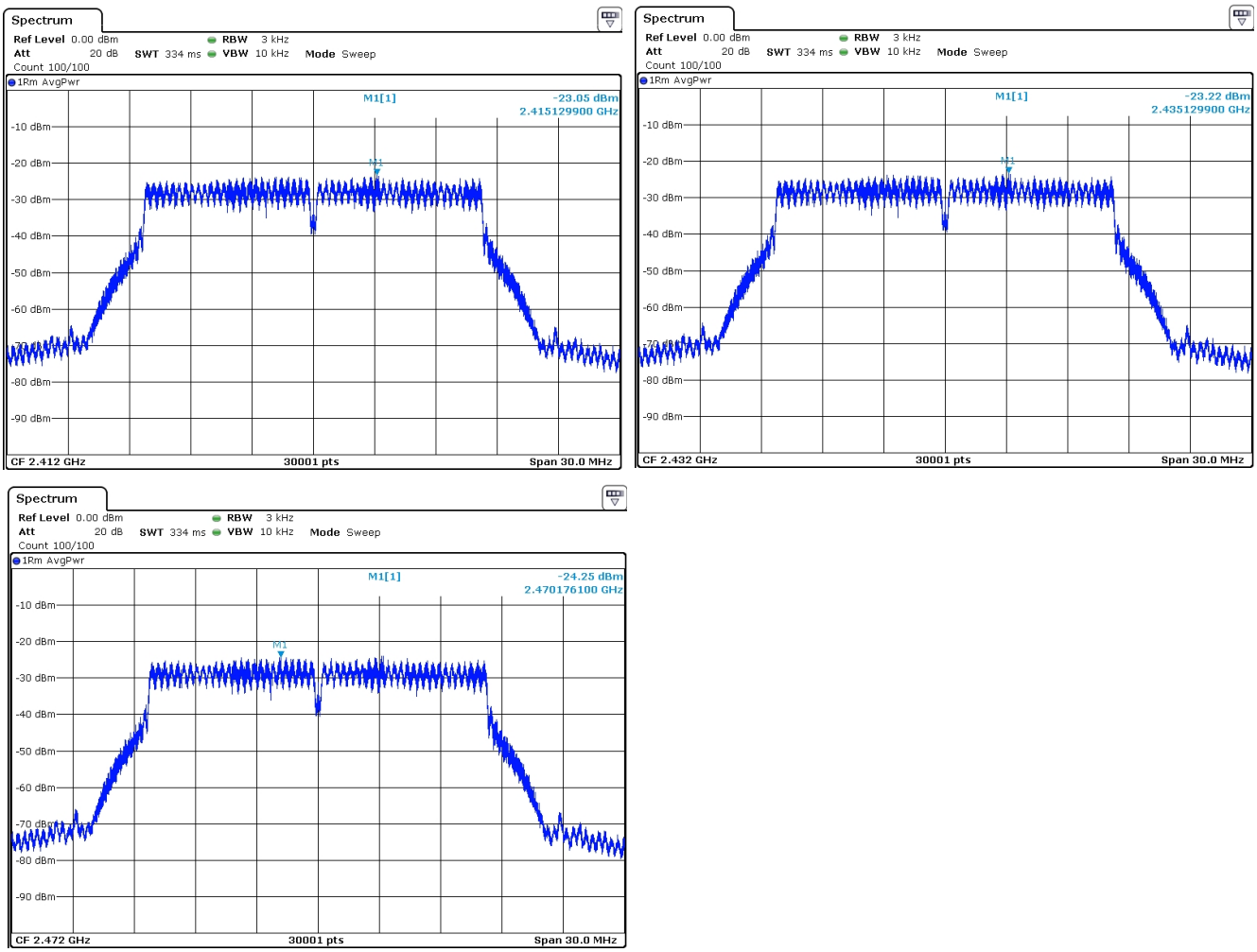

Figure 10: Power Spectral Density Plots.

3.3 Unintentional Emissions

3.3.1 Transmit Chain Spurious Emissions

The results for the measurement of transmit chain spurious emissions at the nominal voltage and temperature are provided in Table 7. Measurements are performed to 10 times the highest fundamental operating frequency.

Table 7: Transmit Chain Spurious Emissions.

Frequency Range	Det	IF Bandwidth	Video Bandwidth		
25 MHz ≤ f ≤ 1 000 MHz	Pk/QPk	120 kHz	300 kHz	**Test Date:**	10-Dec-14
f > 1 000 MHz	Pk/Avg	1 MHz	3 MHz	**Test Engineer:**	Joseph Brunett
				EUT:	CDO150/961D
				Mode:	Continous Tx CH 1,2,4
Equipment Used: HRN15001, HRNC001, HRNXN001, HRXB001, HRNKU001, HRNK001, RSFSV30001				**Meas. Distance:**	3m

													FCC/IC
#	Freq. Start MHz	Freq. Stop MHz	Ant. Used	Ant. Pol.	Pr (Pk) dBm	Pr (Avg)* dBm	Ka dB/m	Kg dB	E3(Pk) dBμV/m	E3(Avg) dBμV/m	E3 Avg Lim dBμV/m	Pass dB	Comments
1	Fundamental Restricted Band Edge (Low Side)												
2	2390.0	2390.0	Horn LS	H/V	-84.5	-92.6	21.3	-0.4	44.2	36.1	54.0	17.9	CH 1, 2412 MHz; max all
3	2390.0	2390.0	Horn LS	H/V	-88.8	-96.7	21.3	-0.4	39.9	32.0	54.0	22.0	CH2, 2432 MHz; max all
4	2390.0	2390.0	Horn LS	H/V	-90.5	-99.5	21.3	-0.4	38.2	29.2	54.0	24.8	CH4, 2472 MHz; max all
5	Fundamental Restricted Band Edge (High Side)												
6	2483.5	2483.5	Horn LS	H/V	-87.3	-96.3	21.8	-0.4	41.9	32.9	54.0	21.1	CH 1, 2412 MHz; max all
7	2483.5	2483.5	Horn LS	H/V	-77.3	-86.8	21.8	-0.4	51.9	42.4	54.0	11.6	CH2, 2432 MHz; max all
8	2483.5	2483.5	Horn LS	H/V	-74.1	-83.3	21.8	-0.4	55.1	45.9	54.0	8.1	CH4, 2472 MHz; max all
9													
10	Harmonic / Spurious Emissions												
11	4000.0	6000.0	Horn C	H/V	-88.2	-97.1	24.9	-0.8	44.5	35.6	54.0	18.4	all channels; max all
12	6000.0	8400.0	Horn XN	H/V	-97.0	-107.6	27.1	-1.2	38.3	27.7	54.0	26.3	all channels; max all; noise
13	8400.0	12500.0	Horn X	H/V	-90.2	-97.2	32.0	-2.0	50.8	43.8	54.0	10.2	all channels; max all; noise
14	12500.0	18000.0	Horn Ku	H/V	-85.9	-95.1	35.4	-2.5	59.0	49.8	54.0	**4.2**	all channels; max all; noise
15	18000.0	25000.0	Horn K	H/V	-89.3	-99.2	33.4	-1.7	52.8	42.9	54.0	11.1	all channels; max all; noise
16													

*QPk detection below 1 GHz, Avg detection at or above 1 GHz with receiver bandwidth as specified at top of table.

** Band Edge Avg. meas. via FCC DTS procedures method 13.3 Integration Method

3.3.2 Relative Transmit Chain Spurious Emissions

The results for the measurement of transmit chain spurious emissions relative to the fundamental in a 100 kHz receiver bandwidth (at the nominal voltage and temperature) are provided in Figure 11 below.

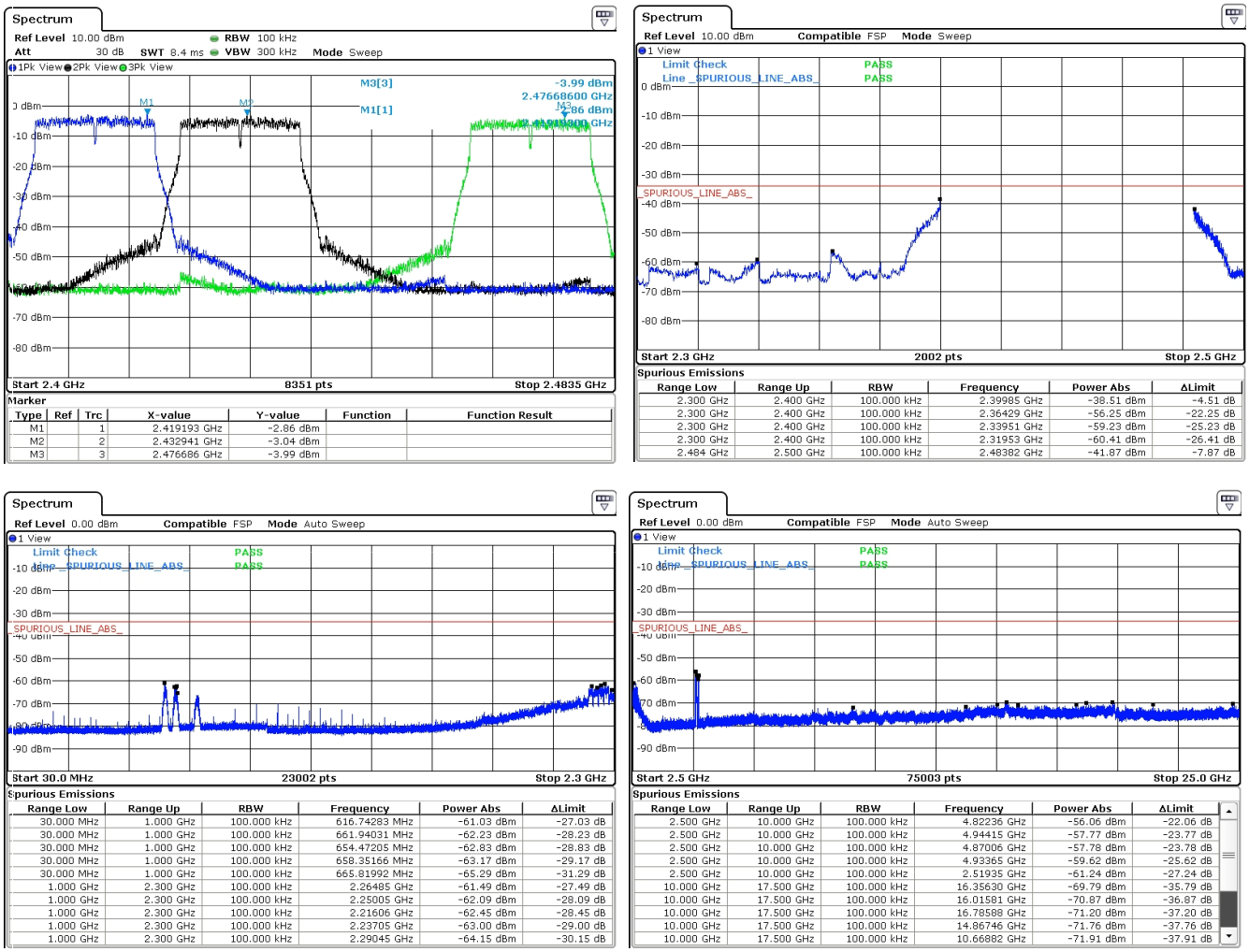

Figure 11: Conducted Transmitter Emissions Measured.

3.3.3 Radiated Receiver Spurious

The results for the measurement of radiated receiver spurious emissions (emissions from the receiver chain, e.g. LO or VCO) at the nominal voltage and temperature are reported in Table 8. Receive chain emissions are measured to 5 times the highest receive chain frequency observed, or 4 GHz, whichever is higher. If no emissions are detected, only those noise floor emissions at the LO/VCO frequency are reported.

Table 8: Receiver Chain Spurious Emissions $\geq$ 30 MHz.

Frequency Range	Det	IF Bandwidth	Video Bandwidth		
25 MHz ≤ f ≤ 1 000 MHz	Pk/QPk	120 kHz	300 kHz	**Test Date:**	15-Dec-14
f > 1 000 MHz	Pk/Avg	1 MHz	3 MHz	**Test Engineer:**	Joseph Brunett
Equipment Used: HRN15001, RSFSV30001				**EUT Mode:**	Receive Only - Standby
				Meas. Distance:	3m

												FCC/IC
#	Freq. MHz	Ant. Used	Ant. Pol.	Pr (Pk) dBm	Pr (QPk/Avg) dBm*	Ka dB/m	Kg dB	E3(Pk) dBμV/m	E3(Avg) dBμV/m	FCC/IC E3lim dBμV/m	CE E3lim dBμV/m	Pass dB	Comments
1	2372.0	Horn LS	H/V	-89.2		21.2	-0.4	39.4		54.0		14.6	max all, noise
2	2392.0	Horn LS	H/V	-88.4		21.3	-0.4	40.3		54.0		13.7	max all, noise
3	2432.0	Horn LS	H/V	-88.2		21.5	-0.4	40.7		54.0		13.3	max all, noise
4	2452.0	Horn LS	H/V	-87.4		21.6	-0.4	41.6		54.0		12.4	max all, noise
5	2472.0	Horn LS	H/V	-89.1		21.7	-0.4	40.0		54.0		14.0	max all, noise
6	2512.0	Horn LS	H/V	-88.0		21.9	-0.4	41.3		54.0		**12.7**	max all, noise
7	NOTE: VCO/LO is 40 MHz offset from Rx Channel. Low, Middle and High Channels tested.												
8													
9													

*QPk detection below 1 GHz, Avg detection at or above 1 GHz with receiver bandwidth as specified at top of table.

3.3.4 Radiated Digital Spurious

The results for the measurement of digital spurious emissions (emissions arising from digital circuitry) at the nominal voltage and temperature are provided in Table 9. Radiation from digital components has been measured to 4 GHz, or to five times the maximum digital component operating frequency, whichever is greater.

Table 9: Radiated Digital Spurious Emissions.

Frequency Range	Det	IF Bandwidth	Video Bandwidth		
25 MHz ≤ f ≤ 1 000 MHz	Pk/QPk	120 kHz	300 kHz	**Test Date:**	9-Dec-14
f > 1 000 MHz	Pk	1 MHz	3 MHz	**Test Engineer:**	Joseph Brunett
f > 1 000 MHz	Avg	1 MHz	10kHz	**EUT:**	CDO150/961D
				EUT Mode:	Active
				Meas. Distance:	3 meters

Digital Spurious Emissions FCC/IC + CE(CISPR)

#	Test Freq. MHz	Antenna Type Used	Antenna Test Pol.	Pr (Pwr Rx.) Pk dBm	Pr (Pwr Rx.) QPk/Avg dBm*	Ka dB/m	Kg dB	E-Field @ 3m Pk dBμV/m	E-Field @ 3m QPk/Avg dBμV/m	FCC/IC Class B E3lim dBμV/m	FCC/IC Class B Pass dB	CE Class B E3lim dBμV/m	CE Class B Pass dB	FCC/IC Class A E3lim dBμV/m	FCC/IC Class A Pass dB	CE Class A E3lim dBμV/m	CE Class A Pass dB	Comments
1	54.0	Bic	H	-53.3	-55.6	8.6	38.2	24.1	21.8	40.0	18.2	40.5	18.7	49.5	27.7	50.5	28.7	
2	54.0	Bic	V	-39.6	-41.6	8.6	38.2	37.8	35.8	40.0	4.2	40.5	4.7	49.5	13.7	50.5	14.7	
3	67.0	Bic	H	-51.2	-52.6	7.7	37.9	25.6	24.2	40.0	15.8	40.5	16.3	49.5	25.3	50.5	26.3	
4	67.0	Bic	V	-35.8	-37.4	7.7	37.9	41.0	39.4	40.0	0.6	40.5	1.1	49.5	10.1	50.5	11.1	
5	81.0	Bic	H	-47.8	-50.6	7.6	37.6	29.2	26.4	40.0	13.6	40.5	14.1	49.5	23.1	50.5	24.1	
6	81.0	Bic	V	-30.8	-32.5	7.6	37.6	46.2	44.5	40.0	-4.5	40.5	-4.0	49.5	**5.0**	50.5	6.0	
7	114.8	Bic	H	-47.4	-49.8	9.5	36.9	32.3	29.9	43.5	13.6	40.5	10.6	54.0	24.1	50.5	20.6	
8	121.6	Bic	H	-45.3	-47.0	10.1	36.8	35.1	33.4	43.5	10.1	40.5	7.1	54.0	20.6	50.5	17.1	
9	128.0	Bic	H	-42.0	-43.4	10.7	36.6	39.0	37.6	43.5	5.9	40.5	2.9	54.0	16.4	50.5	12.9	
10	160.0	Bic	H	-42.9	-45.5	13.1	36.0	41.2	38.6	43.5	4.9	40.5	1.9	54.0	15.4	50.5	11.9	
11	160.0	Bic	V	-42.5	-44.1	13.1	36.0	41.6	40.0	43.5	3.5	40.5	0.5	54.0	14.0	50.5	10.5	
12	192.0	Bic	H	-48.8	-50.7	14.5	35.5	37.2	35.3	43.5	8.2	40.5	5.2	54.0	18.7	50.5	15.2	
13	192.0	Bic	V	-42.9	-45.8	14.5	35.5	43.1	40.2	43.5	3.3	40.5	0.3	54.0	13.8	50.5	10.3	
14	256.0	Log	H	-42.4	-44.4	13.7	34.5	43.8	41.8	46.0	4.2	47.5	5.7	56.9	15.1	57.5	15.7	
15	256.0	Log	V	-49.0	-51.0	13.7	34.5	37.2	35.2	46.0	10.8	47.5	12.3	56.9	21.7	57.5	22.3	
16	288.0	Log	H	-38.7	-38.7	14.5	34.1	48.7	48.7	46.0	-2.7	47.5	-1.2	56.9	8.2	57.5	8.8	
17	288.0	Log	V	-45.7	-45.7	14.5	34.1	41.7	41.7	46.0	4.3	47.5	5.8	56.9	15.2	57.5	15.8	
18	270.0	Log	H	-36.4	-37.7	14.1	34.3	50.4	49.1	46.0	-3.1	47.5	-1.6	56.9	7.8	57.5	8.4	
19	297.0	Log	H	-43.1	-37.7	14.7	33.9	44.6	50.0	46.0	1.4	47.5	2.9	56.9	12.3	57.5	12.9	
20	320.0	Log	H	-40.8	-44.8	15.2	33.6	47.7	43.7	46.0	2.3	47.5	3.8	56.9	13.2	57.5	13.8	
21	323.9	Log	H	-37.1	-42.8	15.3	33.6	51.6	45.9	46.0	0.1	47.5	1.6	56.9	11.0	57.5	11.6	
22	350.0	Log	H	-36.1	-38.3	15.8	33.3	53.4	51.2	46.0	-5.2	47.5	**-3.7**	56.9	5.7	57.5	6.3	
23	357.0	Log	H	-45.1		15.9	33.2	44.6		46.0	1.4	47.5	2.9	56.9	12.3	57.5	12.9	
24	383.9	Log	H	-43.8		16.4	32.9	46.7		46.0	-0.7	47.5	0.8	56.9	10.2	57.5	10.8	
25	480.0	Log	H	-44.4	-45.9	17.8	31.8	48.6	47.1	46.0	-1.1	47.5	0.4	56.9	9.8	57.5	10.4	
26	539.9	Log	H	-47.9	-50.5	18.6	31.2	46.4	43.8	46.0	2.2	47.5	3.7	56.9	13.1	57.5	13.7	
27	672.0	Log	H	-51.5	36.0	20.0	30.0	45.5	133.0	46.0	0.5	47.5	2.0	56.9	11.4	57.5	12.0	
28	728.0	Log	H	-51.6	-58.6	20.5	29.4	46.5	39.5	46.0	6.5	47.5	8.0	56.9	17.4	57.5	18.0	
29																		
30																		
31																		
32																		
33																		
34																		
35																		
36																		
36																		
37																		

*QPk detection below 1 GHz, Avg detection at or above 1 GHz with receiver bandwidth as specified at top of table.

3.3.5 Conducted Emissions Test Results - AC Power Port(s)

The results of emissions from the EUT's AC mains power port(s) are reported in Table 10.

Table 10: AC Mains Power Conducted Emissions Results.

Frequency Range	**Det**	**IF Bandwidth**	**Video Bandwidth**	**Test Date:**	22-Sep-14
150kHz ≤ f ≤ 30 MHz	Pk/QPk/Avg	9 kHz	30 kHz	**Test Engineer:**	Mitch Overbeck
				EUT Mode:	CDO150/961D
Equipment Used: LISNEM001, HP8593E001				**Meas. Distance:**	AC Mains Conducted

AC Mains Power Conducted Emissions														
	Freq.	Line	Vmeas			Class A Qpk		Class A Avg		Class B Qpk		Class B Avg		
			Pk	Qpk	Avg	Vlim*	Margin	Vlim*	Margin	Vlim*	Margin	Vlim*	Margin	
#	MHz	Side	dBuV	dBuV	dBuV	dBuV	dB	dBuV	dB	dBuV	dB	dBuV	dB	Comments
1	0.65	Lo	53.9	49.8	39.7	73.0	23.2	60.0	20.3	56.0	6.2	46.0	6.3	
2	0.60	Lo	52.7	49.7	39.7	73.0	23.3	60.0	20.3	56.0	6.3	46.0	6.3	
3	1.18	Lo	52.9	48.5	38.8	73.0	24.5	60.0	21.2	56.0	7.5	46.0	7.2	
4	0.54	Lo	55.1	50.5	38.7	73.0	22.5	60.0	21.3	56.0	5.5	46.0	7.3	
5	0.90	Lo	55.9	50.4	38.2	73.0	22.6	60.0	21.8	56.0	5.6	46.0	7.8	
6	0.42	Lo	56.9	53.0	39.2	79.0	26.0	66.0	26.8	57.5	4.5	47.4	8.2	
7	0.77	Lo	51.9	49.5	37.2	73.0	23.5	60.0	22.8	56.0	6.5	46.0	8.8	
8	0.18	Lo	67.8	63.2	45.2	79.0	15.8	66.0	20.8	64.5	1.3	54.4	9.2	
9	1.32	Lo	52.1	46.8	36.5	73.0	26.2	60.0	23.5	56.0	9.2	46.0	9.5	
10	0.13	Lo	74.6	70.6	47.5	79.0	**8.4**	66.0	18.5	67.2	-3.4	57.1	9.6	
11	0.86	Lo	52.4	47.9	35.6	73.0	25.1	60.0	24.4	56.0	8.1	46.0	10.4	
12	0.41	Lo	55.0	52.0	35.9	79.0	27.0	66.0	30.1	57.7	5.7	47.6	11.7	
13	0.24	Lo	63.8	57.4	39.3	79.0	21.6	66.0	26.7	62.1	4.7	52.1	12.8	
14	0.35	Lo	56.9	52.1	35.3	79.0	26.9	66.0	30.7	59.0	6.9	48.9	13.6	
15	0.46	Lo	54.7	50.4	32.5	79.0	28.6	66.0	33.5	56.7	6.3	46.6	14.1	
16	0.33	Lo	57.6	53.5	33.6	79.0	25.5	66.0	32.4	59.5	6.0	49.4	15.8	
17	0.32	Lo	60.7	54.2	32.6	79.0	24.8	66.0	33.4	59.7	5.5	49.7	17.1	
18	2.29	Lo	45.6	37.4	28.8	73.0	35.6	60.0	31.2	56.0	18.6	46.0	17.2	
19	2.30	Lo	44.9	37.7	28.5	73.0	35.3	60.0	31.5	56.0	18.3	46.0	17.5	
20	0.26	Lo	62.2	57.1	34.0	79.0	21.9	66.0	32.0	61.4	4.3	51.4	17.4	
21														
22	1.16	Hi	57.4	54.0	42.6	73.0	19.0	60.0	17.4	56.0	2.0	46.0	3.4	
23	1.04	Hi	58.1	55.8	42.0	73.0	17.2	60.0	18.0	56.0	0.2	46.0	4.0	
24	1.15	Hi	57.4	53.7	41.8	73.0	19.3	60.0	18.2	56.0	2.3	46.0	4.2	
25	1.22	Hi	57.3	53.5	41.7	73.0	19.5	60.0	18.3	56.0	2.5	46.0	4.3	
26	1.34	Hi	56.0	53.1	41.2	73.0	19.9	60.0	18.8	56.0	2.9	46.0	4.8	
27	0.70	Hi	56.2	53.4	41.2	73.0	19.6	60.0	18.8	56.0	2.6	46.0	4.8	
28	0.92	Hi	57.8	54.3	41.1	73.0	18.7	60.0	18.9	56.0	1.7	46.0	4.9	
29	0.54	Hi	55.1	52.0	40.7	73.0	21.0	60.0	19.3	56.0	4.0	46.0	5.3	
30	0.76	Hi	56.0	53.9	40.1	73.0	19.1	60.0	19.9	56.0	2.1	46.0	5.9	
31	0.42	Hi	54.9	52.2	40.4	79.0	26.8	66.0	25.6	57.5	5.3	47.4	7.0	
32	0.75	Hi	57.5	53.7	38.2	73.0	19.3	60.0	21.8	56.0	2.3	46.0	7.8	
33	0.57	Hi	56.0	52.9	37.8	73.0	20.1	60.0	22.2	56.0	3.1	46.0	8.2	
34	0.30	Hi	56.4	54.0	40.4	79.0	25.0	66.0	25.6	60.3	6.3	50.2	9.8	
35	1.57	Hi	48.6	47.3	36.0	73.0	25.7	60.0	24.0	56.0	8.7	46.0	10.0	
36	0.29	Hi	59.6	56.3	39.5	79.0	22.7	66.0	26.5	60.5	4.2	50.5	11.0	
37	0.20	Hi	68.5	65.6	41.9	79.0	**13.4**	66.0	24.1	63.6	-2.0	53.6	11.7	
38	0.17	Hi	66.1	63.5	42.1	79.0	15.5	66.0	23.9	65.0	1.5	54.9	12.8	
39	2.21	Hi	47.9	42.9	32.8	73.0	30.1	60.0	27.2	56.0	13.1	46.0	13.2	
40	0.39	Hi	55.1	50.7	34.8	79.0	28.3	66.0	31.2	58.1	7.4	48.0	13.2	
41	0.33	Hi	56.5	52.7	35.9	79.0	26.3	66.0	30.1	59.5	6.8	49.4	13.5	
42	0.20	Hi	63.4	59.1	38.1	79.0	19.9	66.0	27.9	63.6	4.5	53.6	15.5	
40														

**In all cases, VPk ≥ VQpk ≥ VAve. If VPk < Vavg limit, then VQPk limit and Vavg limit are met.*