Intelligent Backhaul Radio

Installation & Operation Guide

Fastback NETWORKS

intelligent wireless transport

2460 N First St., Suite 200, San Jose, CA 95131 U.S.A.
(408) 430-5440 www.fastbacknetworks.com

Doc # 770-00001-13
Sept. 21, 2014

Purpose & Applicability of This Guide

This Guide provides detailed information related to use of the Graphical User Interface ("GUI") and to the Command Line Interface ("CLI") commands and syntax that are implemented in Fastback Network's Intelligent Backhaul Radio ("IBR")*.

This Guide provides information that is specifically applicable to the following:

1. The IBR that transmits in the 5.8 GHz range and is identified as:
   - Model Number**: IBR-2A 3xGE Cu interfaces
   - Product Number***: IBR-1000-83-NA
   - Federal Communications Commission ID: 2AAEH-101
   - Industry Canada ID: 11158A-101
2. The IBR that transmits in the 5.3 GHz range and is identified as:
   - Model Number: IBR-2B 3xGE Cu interfaces
   - Product Number: IBR-1000-38-NA
   - Federal Communications Commission ID: 2AAEH-102
   - Industry Canada ID: 11158-102
3. The features contained in IBR software release 1.5.0

NOTES: Patents: www.fastbacknetworks.com/patents
*** "Model Number" is used by regulatory bodies for regulatory compliance purposes.*
**** "Product Number" is used to identify a unique product and for ordering.*

Special Considerations and Safety Warnings

Prior to installing and operating this equipment, read all instructions and warning notices marked on the equipment or in accompanying documentation.

Do not attempt to apply power to equipment that shows signs of damage, tampering, or mishandling.

Do not open the equipment or attempt to repair or modify it. Doing so will void the warranty and might create a safety hazard and/or cause the equipment to be out of compliance with regulations.

This equipment should be installed, operated, and serviced only by qualified personnel and in a location that is accessible only by authorized service personnel.

Installation and operation of this equipment should be in compliance with applicable national and local codes.

Ensure that this equipment is grounded at all times in accordance with local codes.

Table of Contents

Purpose & Applicability of This Guide 2
Special Considerations and Safety Warnings 2
Table of Contents 3
1. Introducing Intelligent Backhaul Radio ("IBR") 5
1.1 Overview 5
1.2 IBR Models - Transmit & Receive Frequencies 5
1.3 Radio Features 5
1.4 Switch Features 5
1.5 Deployment Options 6
1.6 Physical & Environmental Features 6
2. Getting Started 7
2.1 Physical Inspection 7
2.2 Inventory 7
2.3 External Features 8
2.4 Power Requirements 8
2.5 Technical Assistance 9
3. Communicating with IBR 9
3.1 Serial Console 9
3.2 Graphical User Interface ("GUI" or "Web UI") 10
3.3 Command Line Interface ("CLI") 10
3.4 Access Control – Factory-Set User Names & Passwords 10
3.5 Gigabit Ethernet Ports & Interfaces 11
3.6 External Ethernet Connectors 12
3.7 Power Connector 12
3.8 LEDs 12
4. Preconfiguring IBRs 12
4.1 Power 12
4.2 CLI Privileged Mode 13
4.3 RSL 13
4.4 Management Traffic 13
4.5 Host Name 16
4.6 User Names & Passwords 16
4.7 Password Recovery & Reinstating IBR Default Settings 17
4.8 System Clock 17
4.9 Name Server 18
4.10 NTP Server 18
4.11 SNMP Server 18
4.12 Link ID 18
4.13 Radio Link 18
5. MAC Address Table & Counters 18
5.1 MAC Address Table 18
5.2 Counters 19
6. Installing IBR 20
6.1 Safety Considerations 20
6.2 Installation Checklist 20
6.3 IBR Mounting Bracket 21
6.4 Power & Ethernet Connections 22
6.5 Fabricating an Ethernet Cable 22
6.6 Surge Suppressor Installation 24
6.7 Communication with IBR Via the Serial Port, Telnet, or SSH (Optional) 24

6.8 Link Establishment *24*
6.9 Pointing & Link Optimization *25*
6.10 Path Prediction Tools *26*
7. Features & Functionality 26
7.1 AnyLOS Technology *26*
7.2 Communication Protocols *26*
7.3 Software Management *26*
7.4 SNMP *26*
7.5 Switching & Transport *27*
7.6 Data Handling *27*
7.7 Carrier Ethernet *27*
7.8 Timing & Synchronization *27*
7.9 Network Time Protocol (NTP) *27*
7.10 System Message Logging *28*
7.11 Quality of Service (QoS) & Class of Service (CoS) *28*
7.12 Security *28*
8. Field Test Procedure 28
8.1 Firmware Upgrade *28*
8.2 RFC 2544 Traffic Tests *28*
8.3 Endurance Test *28*
8.4 Traffic Classification Test *28*
Appendix A: Troubleshooting Guide 30
A 1. IBR Reboots During the Boot Process *30*
A 2. IBRs Cannot Establish A Link *30*
A 3. Packet Flood or Storm Condition *32*
A 4. Link Is Established But Not Passing Traffic *33*
A 5. IBR Cannot Be Reached Via the Network *33*
A 6. IBR Is Dropping Frames *34*
A 7. Communicating With IBR Via Command Line Interface (CLI) *35*
A 8. Contacting Fastback Technical Support *36*
Federal Communications Commission (Fcc) Compliance Statement 37
Industry Canada Licence-Exempt RSS Compliance 37
European Union & European Fair Trade Association Regulatory Compliance 38
Declaration of Conformity 38
European Community Declaration of Conformity 38
WEEE Statement 40

1. Introducing Intelligent Backhaul Radio ("IBR")

1.1 Overview

IBR combines a Carrier Ethernet switch and an AnyLOS™ radio which can operate simultaneously in non-, near-, and clear line of sight radio conditions. It is designed for small cell deployment in dense urban environments where line of sight between radios is difficult or impossible to achieve.

IBR is small, passively-cooled, and environmentally protected for use mainly in macro-cellular backhaul, commercial services fiber fill-in, and small cell backhaul applications. It can be mounted on masts, poles, walls, cell towers, or in other such locations and requires little or no alignment when the radios are pointed in the general direction of one another.

NOTE: For safety reasons and regulatory compliance, IBR should be installed in a restricted access location that is accessible only by authorized service personnel.

1.2 IBR Models - Transmit & Receive Frequencies

Two models of IBR transmit and receive in different bands and operate as a pair to form the two ends of a link. IBR may be accessed remotely over the network from telnet or SSH. The **default IP addresses** are:

192.168.128.101 for the radio that transmits in the 5.8 GHz band (IBR101); and

192.168.128.102 for the radio that transmits in the 5.3 GHz band (IBR102).

The default host names are IBR101 and IBR102 respectively and the subnet mask is /16 or 255.255.0.0.

They are referred to as IBR101 and IBR102 throughout this document, and have the following characteristics:

	BW (MHz)	Center Transmit Frequency (MHz)
IBR101		
IBR102		

1.3 Radio Features

IBR uses adaptive rate modulation, proprietary interference avoidance and cancellation techniques, AES encryption, and antenna array signal processing to deliver reliable and secure high speed data transmission over links where line-of-sight between radios is difficult or impossible to achieve. The table below shows IBR performance in a typical installation.

IBR Performance[1]

Data Rate	Scalable to 500 Mbps
Average Latency	≤ 500 µsec
Operating Range	Up to 500m NLOS[2] and 2Km LOS[3]
EIRP	≤ 30 dBm

1.4 Switch Features

IBR provides the following Carrier Ethernet 2.0 features:

- Layer 2 transport
  - VLAN (up to 4096)
  - Bridge mode (pass through)
- Management

[1] Performance might vary depending on environmental conditions
[2] Non-line-of-sight
[3] Line-of-sight

  - CLI
  - Telnet
  - SSH
  - Serial console
  - SNMPv2 MIB
  - Interface-MIB
  - MIB II
  - Enterprise MIB
- Packet-based timing – 1588v2 transparent clock w/submicrosecond latency
- QinQ (IEEE 802.1ad)
- QoS
  - Eight queues
  - 802.1p classification
  - Strict scheduling
  - Weighted Deficit Round Robin (WDRR) Scheduling
  - PIR shaping
- 256 bit AES encryption
- Physical link and network layer redundancy for maximum service uptime
- Service protection and reliability

1.5 Deployment Options

IBR is designed to be deployed in pairs creating a point-to-point link, as illustrated in the diagram below. In referring to the two radios, IBR nearest to the fiber connection is called the "aggregation IBR" and the one nearest to the cell site is the "remote IBR".

- IBR can be connected to an edge switch.
- IBRs can be connected to one another in a multi-hop configuration.
- IBR can provide backhaul for a direct connection to a small cell site.

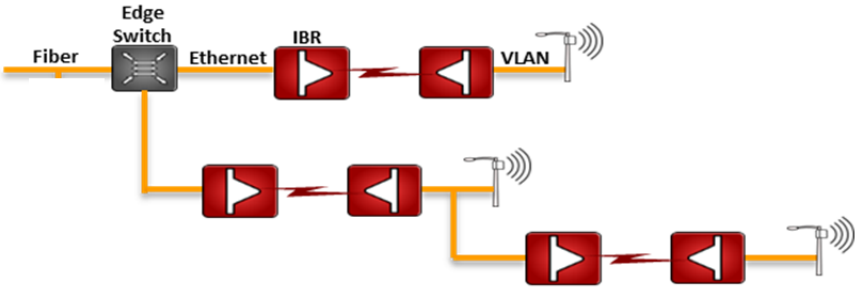

1.6 Physical & Environmental Features

IBR:

- Is passively cooled and can operate continuously at full power and duty cycle under maximum solar load at ambient temperatures from -40° C to +60° C.
- Can be stored safely at temperatures in the range from -55° C to +85° C.
- Has an IP664 environmental rating.
- Weighs approximately 5 kg with and has the approximate dimensions shown in the illustration below.

[4] Ingress Protection Rating

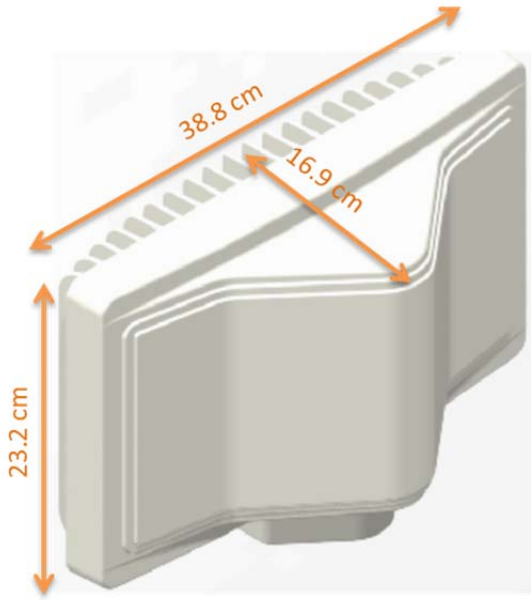

Return to Table of Contents

2. Getting Started

2.1 Physical Inspection

Prior to opening the shipping crate, inspect it visually for evidence that it has been opened or mishandled. After opening the crate, carefully inspect the contents for completeness or evidence of damage or tampering.

In the event the shipping crate is damaged or the contents are damaged or incomplete, notify Fastback Networks by telephone, fax, or email. The shipping crate, dividers, and packing materials should be retained for use in the event that equipment must be returned to Fastback Networks.

After removing IBR from its packing crate, record the serial number and product number (e.g., 75JP or 57JP), both of which will be needed in case it is necessary to seek assistance from Fastback Network's Customer Support Group.

DO NOT OPEN IBR FOR ANY REASON. DOING SO WILL VOID THE WARRANTY AND MIGHT CREATE A SAFETY HAZARD AND/OR CAUSE THE EQUIPMENT TO BE OUT OF COMPLIANCE WITH REGULATIONS.

DO NOT ATTEMPT TO APPLY POWER TO AN IBR THAT SHOWS SIGNS OF DAMAGE, TAMPERING, OR MISHANDLING.

2.2 Inventory

The following components are required for successful installation of a link:

a. One IBR101 and one IBR102, each of which includes the following:
   - Three weatherproof RJ-45 cable-end connectors for CAT5E & CAT6 cables*;
   - A weatherproof cap for the four-pin serial connector that is attached to IBR when the IBR serial connector is not in use*.
   - Two weatherproof caps for RJ-45 connectors that are attached to IBR when the IBR RJ-45 connectors are not in use*.
   - A two-meter serial cable with a DB-9 connector on one end and a four-pin connector on the other end;

- Six crimp-on ends for RJ-45 connectors & instructions
- An information sheet for accessing regulatory documents and manuals on line;
- A quick reference guide;
- A warranty registration card;

  **Note: For proper operation of IBR, the weatherproof integrity of all cables and connectors should be maintained and weatherproof caps should be firmly installed on unused connectors at all times.*

b. A mounting bracket for each IBR that is suitable for that radio's location. Mounting brackets that are available from Fastback Networks are discussed in the section titled Installing IBR in this Guide.

c. A PoE+ injector capable of supplying at least thirty-five (35) watts.

d. A grounding lug as described in the section titled Installing IBR in this Guide.

e. Appropriate mounting hardware for the PoE injector.

2.3 External Features

The illustration below identifies external features of IBR. The small cap at the end of the radome (facing upward in the illustration) houses the DFS (dynamic frequency selection) antenna.

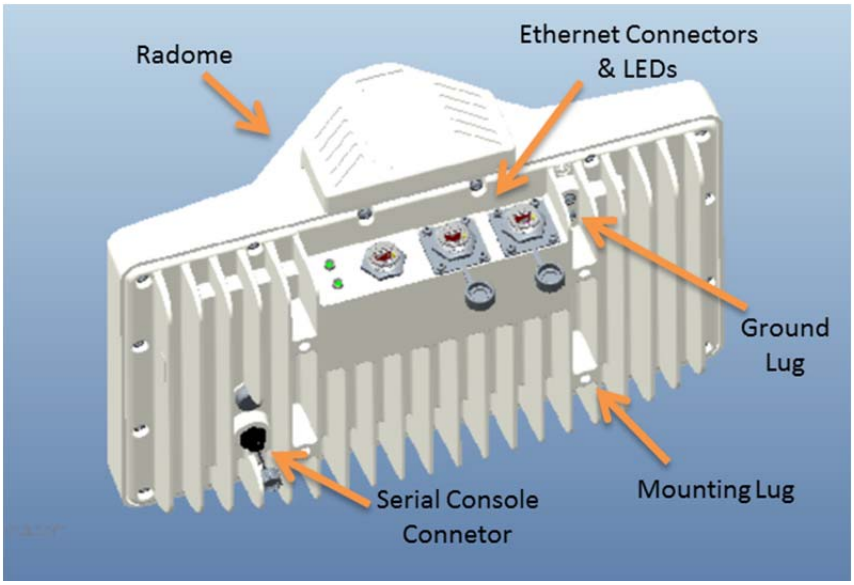

The side where the mounting lugs and serial port are located is referred to as the "back", since it is the side that will be against a wall or mast when IBR is mounted.

The side that has the three Ethernet connectors and two LEDs is referred to as the "bottom". Even though the connectors are weatherproof, IBR should be mounted with the connectors facing downward for maximum environmental protection.

2.4 Power Requirements

IBR must be powered via PoE+ through the RJ-45 connector that is nearest the LEDs (port 0). Applying PoE+ through any of the other Ethernet connectors will cause no harm, but will not power IBR.

IBR requires thirty (30) watts. Based on an estimated loss of five (5) watts in a one hundred meter run of Ethernet cable, the power injector should be capable of delivering at least thirty-five (35) watts at 60° C.

IBR does not have a capability to provide PoE to other devices on the network.

2.5 Technical Assistance

In the event there is a problem with IBR or other equipment provided by Fastback Networks (e.g., it arrives damaged or incomplete, or appears to not work properly), the operator should contact Fastback Networks' service center via telephone or email and be prepared to provide:

- Product type and serial number
- Product service history (e.g., when was it received, how long has it been in service, other relevant information)
- Description of the problem
- Customer contact information

Fastback Networks' Customer Service can be reached by any of the following:

- Telephone: (408) 430-5440 Select service option (2) between 0800–1700 PT on business days
- Email: support@fastbacknetworks.com
- Web: http://support.fastbacknetworks.com

Return to Table of Contents

3. Communicating with IBR

IBR has no external or internal keypads, switches, dials, knobs, or other physical controls. Therefore, an operator will require a smart terminal, computer, workstation, or other such device to communicate with IBR using command line interface and accessing IBR via any of the Ethernet ports using Telnet or SSH or via the serial console port.

3.1 Serial Console

IBR has a four-pin connector that provides a serial interface for connection to a local operator terminal. This interface can be used by an operator to communicate with and control the IBR during preconfiguration and troubleshooting or at other times when a local operator needs to communicate with IBR other than over an Ethernet link.

The mating cable that is provided with IBR has a DB9 connector on the other end. The illustrations below show the pinouts of the two connectors and the cable wiring scheme.

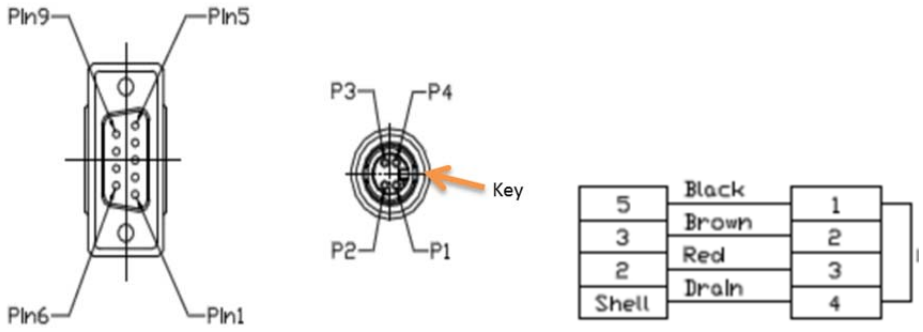

This interface can be used by an operator only to control, configure, and troubleshoot IBR, but not for general network connectivity or data transmission. Pin-outs of the four-pin serial connector are shown in the table below.

PIN #	Purpose
1	Ground
2	Transmit
3	Receive
4	Not used

The following settings are recommended when communicating with IBR via the serial interface:

- 115,200 bps
- 8 data bits
- 1 stop bit
- No parity
- No flow control
- 25 lines and 80 columns window size

NOTE: If a serial device is disconnected and then reconnected, CLI might be left in a "bad command" state and not respond to legitimate commands. This condition can be cleared by entering the following sequence: <cr> <cr> <Ctrl-C>.

3.2 Graphical User Interface ("GUI" or "Web UI")

IBR's internal HTTP browser-based GUI provides an easy alternate way to monitor and control IBR. A detailed discussion of the GUI can be found in the *CLI Guide*.

3.3 Command Line Interface ("CLI")

When an operator logs onto IBR, CLI will be launched in User Mode (i.e., startup mode), which provides minimal functionality.

- CLI is supported on the serial interface and via Telnet or SSH connections through the Ethernet interface.
- CLI uses a mix of IOS syntax.
- Access to the full functionality mode (i.e., "Privileged" mode) can be controlled by password.

The commands shown below are the only commands available in User mode.

User Mode Commands

Command	Description
IBR102 >	
!	Comments
enable	Enter Privileged Mode
exit	Exit from CLI
ping	Send messages to network hosts
telnet	IP address or host name of a remote system
traceroute	Determine route & transit time to a remote host
ip	IPv4
ipv6	IPv6

Detailed information can be found in the *CLI Guide*.

3.4 Access Control – Factory-Set User Names & Passwords

IBR can be configured to require a valid user ID and password for access. Two levels of access can be established: minimum functionality and full functionality. Detailed instructions for controlling access to IBR are contained in the *CLI Guide*.

When CLI is launched and the "user name" dialog box appears, the user must enter a valid user name and password. Factory-set **user names** are ***fbn*** and ***admin*** (either can be used) and the factory-set **password**

(for both user names) **is *fastback***. The same factory-set password will allow a user to enter the Privileged Mode (see the *CLI Guide* for detailed information).

When a user with privileged access changes either of the passwords for the factory-set user names, both factory-set user accounts will be assigned the new password.

After login, CLI will be in the User Mode, which offers a limited set of commands. The CLI command prompt in User Mode is the symbol **>** followed by a space. When the command prompt is displayed, it will be preceded by the host name if one has been assigned. Throughout this manual and the *CLI Guide*, the host name *IBR102* will be used. With this host name, the User Mode prompt will appear as shown below:

IBR102 >

The host name can be changed or omitted by a Privileged user. Antennas

The radome on top of IBR houses transmit and receive antennas which face outward through the flat sides of the radome. The direction in which the antennas are pointed can be changed only by changing the orientation of the IBR itself.

IBR is not designed to be used with external antennas.

3.5 Gigabit Ethernet Ports & Interfaces

IBR includes a 4-port Ethernet switch. Three Gigabit Ethernet ports are exposed externally, and one is connected internally to the radio. Beginning with the port nearest the LEDs as seen in the illustration below, the external Gigabit Ethernet ports are numbered 0, 1, and 2 (i.e., ge0, ge1, ge2).

IBR

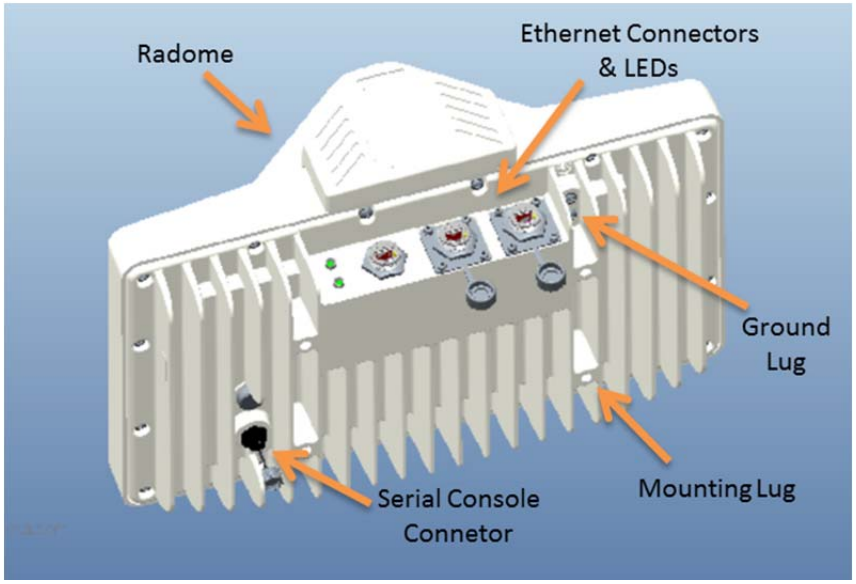

The Gigabit Ethernet port that is connected to the radio (not externally available) is identified as Gigabit Ethernet 3 (ge3). Radio parameters are configured through the radio 0 interface, while switching parameters that apply both to the physical Gigabit Ethernet ports and the radio port, such as VLAN, QoS, and CoS, are configured through the Gigabit Ethernet interface.

In this *Guide* and in the *CLI Guide*, *port* is used in reference to the physical Ethernet external connections, and *interface* is used in reference to the virtual interface to which an IP address has been assigned. Ethernet interfaces, including loopback interfaces, can be created, as discussed in the CLI Guide, and each port can be assigned to one or more interfaces. Ethernet interfaces, including loopback interfaces, are associated with VLANs and can be created and configured as discussed in the *CLI Guide* in the section titled VLANs.

3.6 External Ethernet Connectors

IBR has three RJ-45 connectors located on the bottom of the unit, as shown in the illustration in the preceding section. Beginning with the port nearest the LEDs, the Gigabit Ethernet ports are numbered 0, 1, and 2 (ge0, ge1, ge2).

All three Ethernet connectors can be used for traffic and IBR management data, but only the one nearest the LEDs (ge0) can power IBR via PoE+.

The RJ-45 connectors will accept shielded and bonded RJ-45 type mating connectors with a weatherproof seal. It is essential that only weatherproof connectors be connected to IBR.

3.7 Power Connector

Power must be connected to ge0 as shown in the graphic below. Connecting power to ge1 or ge2 will not harm IBR, but will not power it.

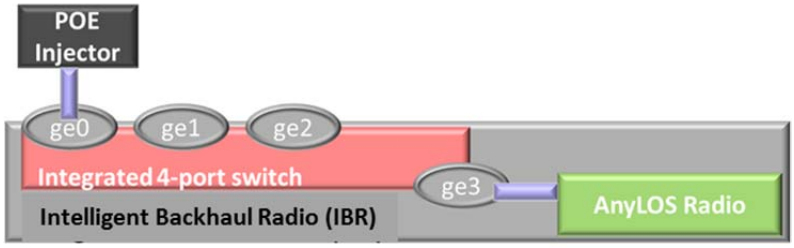

3.8 LEDs

Two weatherproof LEDs that are mounted adjacent to ge0 provide a visual means for an operator to determine the status of IBR. Both LEDs can be deactivated via the CLI. See the *CLI Guide* for detailed information. The LEDs can be seen in the IBR image. The LED nearest to the cooling fins is the radio LED and the LED nearest to the radome is the system LED.

When the LEDs are active (the default condition):

- The upper LED (when the LEDs are on the left from the viewer's perspective) is a system indicator and will provide the following information:
  - Off: System has no power.
  - Amber: Bootloader activated.
  - Green: Fastback Operating System loaded.
- The lower LED is the radio indicator and will provide the following information:
  - Off: Radio not initialized.
  - Amber: Radio initialized.
  - Green: Radio initialized and a link established.

Return to Table of Contents

4. Preconfiguring IBRs

The following procedure is for preconfiguring a pair of IBRs prior to installation. Consult the *CLI Guide* as necessary for detailed information.

4.1 Power

CAUTION:

- When power is applied, the **radios automatically will begin transmitting** within sixty (60) seconds. To avoid the possibility of damaging an IBR by overdriving the front end of the receiver, prior to

connecting a power source, position the two IBRs so that they are tilted away from each other, facing downward, and separated by at least one meter.

- IBR does not have a power on/off switch, either in hardware or software. When power is applied to the unit, IBR will be in a "power on" condition and the system LED beside the ge0 port connector will be illuminated.

Apply power to each IBR using a PoE+ source connected to Gigabit Ethernet interface 0. Although PoE+ sources can be applied harmlessly to any port, only ge0 can be used to power IBR.

4.2 CLI Privileged Mode

Enter Privileged mode by entering the *enable* command:

IBR102 > *enable*

The factory-set password for entering Privileged mode is ***fastback***. The Privileged Mode command prompt, with IBR102 as host name will be:

IBR102 #

The following CLI commands are available in Privileged mode.

Privileged Mode Commands

Command	Description
IBR102 #	
!	Comments
clear	Reset functions
alarms	Clear alarm history
config	Reset to factory defaults
counters	Clear counters on one or all interfaces
configure terminal	Enter Global Config mode to manage device parameters
copy	Copy a file (e.g., running-config)
ethernet	Ethernet subcommands
exit	Return to User Mode
ping [string]	Send messages to network hosts [hostname or IP address]
reload	Halt & perform a cold restart
show	Show running system info (see CLI Guide for a complete list of show cmds)
telnet	IP address or hostname of a remote system
traceroute	Print the route packets trace to network host
ip	IPv4
ipv6	*IPv6*
[string]	Hostname or IP address to trace the route
upgrade	Upgrade commands
http	Upgrade http (enter A.B.C.D [/mask] or any http server IP address)
sftp	Upgrade sftp (enter A.B.C.D [/mask] or any sftp server IP address)
tftp	Upgrade tftp (enter A.B.C.D [/mask] or any tftp server IP address)

For a detailed discussion of CLI commands, refer to the *CLI Guide*.

4.3 RSL

Check the RSL on each IBR using the following CLI command in the Privileged mode:

IBR102 # *show interface radio 0 status*

RSL should be -36dBm or less. If RSL is greater than -36 dBm (e.g., -30dBm) on either IBR, the received signal level is too high and greater separation of the IBRs is recommended to avoid receiver saturation.

4.4 Management Traffic

IBR interfaces should be configured in such a way as to separate internal management traffic from user data traffic (i.e., prevent management traffic from being sent over the network). The following sequence of

commands illustrates a way to accomplish this. VLAN2, VLAN823, and the IP addresses shown are used only as examples. (See the CLI Guide for detailed information relating to the VLAN interfaces.)

4.4.1 *Configure VLAN Interfaces.*

Prompt	***Command***
IBR102 (config)#	*interface vlan 1*
IBR102 (config-vlan-1)#	*ip address 192.168.128.101 255.255.255.0*
IBR102 (config-vlan-1)#	*exit*
IBR102 (config)#	*interface vlan 2*
IBR102 (config-vlan-2)#	*no shutdown*
IBR102 (config-vlan-2)#	*ip address 10.22.12.201 255.255.0.0*
IBR102 (config-vlan-2)#	*exit*
IBR102 (config) #	*interface vlan 823*
IBR102 (config-vlan-823) #	*ip address 10.1.1.158 255.255.0.0*
IBR102 (config-vlan-823) #	*exit*
IBR102 (config) #	

Note: When the management port has been reassigned, the Telnet connection will be lost and the operator will be required to Telnet to the new management port address. See the CLI Guide for more information relating to the VLAN interfaces.

4.4.2 *Remove VLAN 1 from ge1, g2, and ge3.*

Prompt	***Command***
IBR102 (config)#	*interface gigabitethernet 1*
IBR102 (config-if-ge1)#	*no switchport trunk native vlan 1*
IBR102 (config-if-ge1)#	*exit*
IBR102 (config)#	*interface gigabitethernet 2*
IBR102 (config-if-ge2)#	*no switchport trunk native vlan 1*
IBR102 (config-if-ge2)#	*exit*
IBR102 (config) #	*interface gigabitethernet 3*
IBR102 (config-if-ge3)#	*no switchport trunk native vlan 1*
IBR102 (config-if-ge3)#	*exit*
IBR102 (config) #	*interface vlan 823*

4.4.3 *Add VLAN 2 to the GigabitEthernet Interfaces (use Trunk Native to allow both untagged and VLAN2 tagged traffic).*

Prompt	***Command***
IBR102 (config)#	*interface gigabitethernet 1*
IBR102 (config-if-ge1)#	*switchport trunk native vlan 2*
IBR102 (config-if-ge1)#	*exit*
IBR102 (config)#	*interface gigabitethernet 2*
IBR102 (config-if-ge2)#	*switchport trunk native vlan 2*
IBR102 (config-if-ge2)#	*exit*
IBR102 (config) #	*interface gigabitethernet 3*
IBR102 (config-if-ge3)#	*switchport trunk native vlan 2*
IBR102 (config-if-ge3)#	*exit*
IBR102 (config) #	*interface vlan 823*

4.4.4 *Add VLAN 823 to GigabitEthernet 3 (use Trunk Allowed to allow only VLAN823 tagged traffic).*

Prompt	*Command*
IBR102 (config) #	*interface gigabitethernet 3*
IBR102 (config-if-ge3)#	*switchport trunk allowed vlan 823*
IBR102 (config-if-ge3)#	*exit*

4.4.5 *Verify VLAN settings.*

Prompt	*Command*			
IBR102 #	*show vlan brief*			
VLAN	Name	Status	Native	Allowed
---	---	---	---	---
1	VLAN1	active	ge0	
2	VLAN2	active	ge1 ge2 ge3	ge1 ge2 ge3
823	VLAN823	active	ge3	
IBR102 #				

4.4.6 *Confirm that the interfaces were correctly configured.*

Sample Output of the *show ip interfaces* Command

Prompt	*Command*
IBR102 #	*show ip interfaces*

```
1: lo: <LOOPBACK,UP,LOWER_UP> mtu 16436 qdisc noqueue
   link/loopback 00:00:00:00:00:00 brd 00:00:00:00:00:00
   inet 127.0.0.1/8 scope host lo
2: eth0: <BROADCAST,MULTICAST,UP,LOWER_UP> mtu 1500 qdisc pfifo_fast qlen 1000
   link/ether 18:48:d8:00:00:49 brd ff:ff:ff:ff:ff:ff
3: danipc: <BROADCAST,MULTICAST,UP,LOWER_UP> mtu 1500 qdisc pfifo_fast qlen 1000
   link/ether 00:24:86:00:00:00 brd ff:ff:ff:ff:ff:ff
4: eth0.1@eth0: <BROADCAST,MULTICAST,UP,LOWER_UP> mtu 1500 qdisc noqueue
   link/ether 18:48:d8:00:00:49 brd ff:ff:ff:ff:ff:ff
   inet 192.168.128.158/24 brd 192.168.128.255 scope global eth0.1
5: eth0.2@eth0: <BROADCAST,MULTICAST,UP,LOWER_UP> mtu 1500 qdisc noqueue
   link/ether 18:48:d8:00:00:49 brd ff:ff:ff:ff:ff:ff
   inet 10.22.12.201/16 brd 10.22.255.255 scope global eth0.2
6: eth0.823@eth0: <BROADCAST,MULTICAST,UP,LOWER_UP> mtu 1500 qdisc noqueue
   link/ether 18:48:d8:00:00:49 brd ff:ff:ff:ff:ff:ff
   inet 10.1.1.158/16 brd 10.1.255.255 scope global eth0.823
IBR102 #
```

Following the first three interfaces in the output, there will be an additional interface for each VLAN. The name of an interface will be *eth0.nn* where *nn* is the VLAN number to which the IP address is assigned. Note that even though the interface is shown as *eth0*, the IP address can be reached only through interfaces to which that VLAN has been assigned.

4.4.7 *Review the new configuration.*

The configuration created in this section creates three distinct interfaces for use on IBR.

a. eth0.1 is the management interface on VLAN1 (the default VLAN on IBR). VLAN1 has been assigned to GigabitEthernet port ge0 and given the IP address 192.168.128.101/16.

   This interface is isolated from the other interfaces and can be used to access the IBR and manage the switch without allowing management traffic to traverse the RF link. Because VLAN1 is associated only with ge0 and not ge3, VLAN1 traffic will not transverse the link.

b. eth0.2 is the data interface on VLAN 2, which has been assigned to GigabitEthernet ports ge1, ge2, and ge3.

   Traffic on VLAN2 can be sent across the RF link and out onto the network. It allows all untagged traffic and traffic tagged with VLAN ID 2 to be sent to the network.

GigabitEthernet ports 1 and 2 are physical ports allowing connections to the provider network.

GigabitEthernet 3 is dedicated to the IBR RF link and creates a wireless bridge between two network segments.

c. eth0.823 is an isolated debug interface on VLAN 823.

VLAN823 will allow traffic only to be sent from one IBR to the other across the wireless link and requires that the sender be logged onto one of the IBRs.

One use of this interface is to allow a user to send ping packets to the opposite IBR to verify link integrity. This VLAN has no exposure to a physical network interface so traffic on this VLAN is isolated from the network.

Another important use of this configuration is to manage the link partner from the local IBR.

4.4.8 *Save the New Configuration*.

Use the following commands to save the new settings to the startup configuration file.

IBR102 # *copy running-config startup-config*

4.5 Host Name

Change the host name (optional) using the following command in Global Config mode.

IBR102 (config) # *hostname [newname]*

4.6 User Names & Passwords

IBR can be configured to require valid user names and passwords for access to CLI User Mode, CLI Privileged Mode, and the GUI. Each user name and password will be independent of the others.

Passwords are stored permanently in IBR and are not part of the startup-config or running-config files. Passwords will be displayed in encrypted form in the *show running-conf*ig output.

Passwords are strings of at least six and not more than sixteen characters and can include any letter, any numeral, and any of the following symbols: ! @ $ %

4.6.1 *CLI User Mode* - IBR can be configured to recognize individual user names, each with its own password. The command to configure User Mode user names and passwords is:

IBR102 (config) # *username [user_id] password [newpassword]*

If the password of an existing user is being changed, user_id will be the user name (or ID) of the existing user and newpassword will be the newly assigned password.

If a new user is being created, user_id will be the new user name and newpassword the assigned password for that user.

The command to remove an existing user name is:

IBR102 (config) # *no username [user_id]*

where user_id is the name of the user that is being removed.

The factory-set user name is *fbn* and the password is *fastback*. The factory-set user name (*fbn*) cannot be changed or deleted, but the password for *fbn* can be changed using either of the following commands:

IBR102 (config) # *username fbn password [newpassword]* or

IBR102 (config) # *enable password level 1 [newpassword]*

where *newpassword* is the newly assigned password.

4.6.2 *CLI Privileged Mode* – Privileged Mode can be entered only from User Mode and can be protected with a single password for all users. The requirement to use a password to enter Privileged Mode can be enabled or disabled from the Privileged Mode as follows:

IBR102 (config) # *enable password {level (1-15)} [newpassword]*

where *level* must either be the number 1 or the number 15 and *newpassword* is the newly assigned password.

- When level = 1, the password for the user named *fbn* will be changed.
- When level = 15, the password to enter Privileged Mode will be affected.
- When no level option is entered, Privileged Mode will be affected.

The requirement for a user to enter a password to move from User Mode to Privileged Mode can be disabled using the following command; however, **this is not a recommended configuration** because it can create security problems:

IBR102 (config) # *no enable password*

The following are examples of commands for creating, changing, or disabling passwords.

Setting Passwords

Command	**Description**
IBR102 (config) #	
enable password level 1 fastbackuser	Set PW as *fastbackuser* for the user named *fbn*
enable password level 15 fastb@ckuser	Set the PW for all users to enter Privilege Mode as *fastb@ckuser*
enable password fast$$$user	Set the PW for all users to enter Privilege Mode as *fast$$$user*
no enable password level 1	Remove the requirement for *fbn* to use a PW to enter User Mode
no enable password level 15	Remove the requirement for all users to use a PW to enter Privileged Mode
no enable password	Remove the requirement for all users to use a PW to enter Privileged Mode

4.6.3 *Web Graphical User Interface (GUI)* – User names and passwords for the GUI are managed independently from CLI user names and passwords. For additional information, see the GUI section of the CLI Guide.

4.7 Password Recovery & Reinstating IBR Default Settings

In the event that users cannot gain access to IBR because passwords have been forgotten, the following procedure can be used to **reset all IBR settings to their default values**, thereby allowing a user to regain access to IBR. This procedure will boot IBR into a Linux root shell single-user mode where the user can change the Privileged Mode password.

- Initiate a system reboot and, within two (2) seconds, press *Ctrl C* to interrupt the reboot process. Enter the following command when the uMON> prompt is displayed[5]:

  uMON> *run flash linuxsingle*
- The system will take several minutes to reboot. When the Linux prompt is displayed, enter the command *password root* and then respond to the succeeding prompts to change the Privileged Mode password and reboot the system by entering the command *reboot*.
- When IBR reboots to CLI User Mode, use the default user name and password to log onto the system. Use the new Privilege Mode password to enter Privilege Mode.
- Then follow the standard procedure to change the User Mode user name and password.

Note: To interrupt an ongoing reboot, interrupt power to IBR.

4.8 System Clock

The command to set the IBR system clock is executed in Global Config mode and has the following form.

[5] This works only with a serial console connection.

IBR102 (config) # *clock set [hh:mm:ss] [YYYY-MM-DD]*

where all of the arguments are integers.

4.9 Name Server

The following command can be used to configure the Name server.

IBR102 (config)# *ip name-server [ip-address}*

4.10 NTP Server

The following command can be used to configure the NTP server.

IBR102 *(config)# ntp server [ip-address}*

4.11 SNMP Server

Commands for configuring SNMP are shown in the table below. For detailed information, see the *CLI Guide*.

Configuring SNMP

Command	Description
IBR102 (config) # *snmp-server*	Configure SNMP
community	SNMP community configuration
contact	Set the system contact
enable	Enable SNMP notification types (traps)
group	SNMP group configuration
host	SNMP trap host configuration
location	Set the system location
trap-env	Set SNMP trap environment (standard or x.733)
trap-thresholds	Set SNMP trap threshold values
view	SNMP view configuration

4.12 Link ID

The command to set Link ID has the following syntax:

IBR102 (config) # *link-id [linkname]*

where *linkname* is an alphanumeric string from one to thirty-two characters in length that can contain any of the following symbols: ! @ # $ % - _

Using Link ID Command

Prompt	*Command*	Remarks
IBR102 (config) #	*interface radio 0*	Config radio interface "0"
IBR102 (config-if-rad0) #	*link-id 58$a2*	Sets link ID to "58$a2"
IBR102 (config-if-rad0) #	*exit*	Return to Global Config
IBR102 (config) #		

4.13 Radio Link

IBRs will automatically establish a link using the best frequencies to optimize data throughput.

Return to Table of Contents

5. MAC Address Table & Counters

5.1 MAC Address Table

The MAC Address table, sometimes referred to as the L2 (or Layer 2) table, associates MAC addresses with their respective VLAN's and ports.

IBR automatically records the MAC address of a received packet, the port on which it was received, and whether the packet has a VLAN designation. When an incoming packet arrives at IBR, the correct port and VLAN for delivery of the packet is determined by comparing the MAC address of the packet with the corresponding entry in L2. If the MAC address is not in the L2 table, IBR will send the packet out to all ports except the one on which it was received, and then record the port and VLAN of the device that responds to the packet.

When a MAC address in the L2 table has not been used within a preset time (the "aging time"), the MAC address entry is automatically deleted from the table. The default aging time is three hundred (300) seconds. Aging time is the only property of the L2 table functionality that can be changed. The L2 table can contain up to sixty-four thousand entries so that, with a reasonable aging time, there is little chance of an overflow condition.

Using the CLI "show" command, an operator can display the contents of the L2 table.

5.2 Counters

Counters are implemented as two-dimensional arrays that associate traffic metrics with the corresponding IBR ports (interfaces). Counters are activated by default and cannot be disabled; however, the contents of counters can be reset to zero or displayed by operator command. The counters in IBR are listed below organized the way they would be displayed using the *show* command.

IBR102 # *show interface counters*	Shows a brief view, not including errors
IBR102 # *show interface counters all*	Shows all except TxQueue
IBR102 # *show interface counters detail*	Shows the following counters
InBytes	Bytes received at a port
InUcastPkts	Unicast packets received at a port
InMcastPkts	Multicast packets received at a port
InBcastPkts	Broadcast packets received at a port
OutBytes	Bytes sent from a port
OutUcastPkts	Unicast packets sent from a port
OutMcastPkts	Multicast packets sent from a port
OutBcastPkts	Broadcast packets sent from a port
RxPause	Pause requests received
TxPause	Pause requests sent
IBR102 # *show interface counters errors*	Shows error counters
CrcAlign-Err	Frames without an even # of octets or with CRC errors
Collisions	Collisions before successful transmission
Symbol-Err	Symbol errors
Undersize	Frames rcvd that are < 64 bytes
Oversize	Frames rcvd that are > 1514 bytes
Fragments	Oversized packets sent as fragments
Jabbers	Frames longer than 1518 octets
FCS-Err	Frames corrupted during transmission
Deferred-Xmit	Times xmsn delayed
Single-Col	Times only one collision occurred before successful xmsn
Multi-Col	Times multiple collisions occurred before successful xmsn
Late-Col	Collisions detected after > 512 bits sent
Excess-Col	Frames not sent due to excess # of retries
IBR102 # *show interface counters txqueue*	Shows TxQueue counters
Octets	TX queue octets

Packets	TX queue packets

MCS counters can be displayed using the following command:

IBR102 # *show interfaces radio 0 status*

Counters can be cleared using the following commands:

IBR102 # *clear counters mcs*	clears mcs counters
IBR102 # *clear counters radio*	clears radio counters
IBR102 # *clear counters switch*	clears counters on all switch interfaces
IBR102 # *clear counters gigabitEthernet [arg]*	arg can be 0, 1, 2, or 3

Return to Table of Contents

6. Installing IBR

6.1 Safety Considerations

- Ensure that grounding is in accordance with local codes. IBR should be grounded using the ground lug connector on the back of IBR with a lug such as Panduit Two-Hole Standard Barrel Copper Lug, Panduit part #LCD6-14A-L (shown below). Note that since the grounding lug mounts between the fins, any lug greater than 0.48 inches in width will not fit.

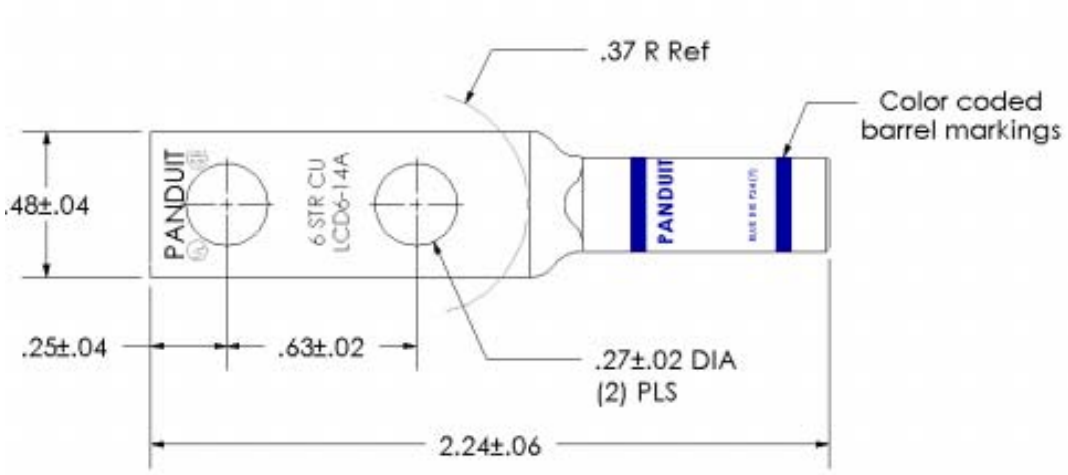

- Use overhead work methods and/or equipment that are appropriate for the location; e.g., climbing equipment, ladder, man lift, etc.
- Note the locations of other equipment, power lines, vehicle traffic, and other potential safety hazards at the installation site.

6.2 Installation Checklist

- A pretested and preconfigured IBR. Note: A link will require one each of a 5.5 GHz IBR and a 5.7 GHz IBR.
- IBR mounting brackets.
- A PoE+ source capable of supplying at least thirty-five (35) watts total on two pairs (pins 4&5 and 7&8) or on all four pairs.
- A surge suppressor that has been validated to function properly with IBR, such as Transector Model T-419899.
- Materials for grounding IBR:
  - Grounding IBR requires terminating the two-hole ground lug, which will accommodate two each 12-24x1/2" or M6 ground taps. The IBR chassis has two pre-tapped holes for this lug.

  - Ground terminations should be coated with a no-oxide compound such as a dielectric grease to protect the ground connections against oxidation.
  - Ground should be terminated with #6 AWG solid ground wire to a local Telco grounding bus.
  - The surge suppressor should be grounded in accordance with its manufacturer's specifications.
- Hand tools and materials as appropriate for the mounting locations that will be used:
  - Pole mount: Banding strap or hose clamp, maximum ¾" strap width of appropriate length for the pole diameter. Note: When mounted on a pole, FBN's articulating mount requires that the pole have a minimum diameter of two inches (5.08 cm).
  - Wall mount: 8mm or 5/16" diameter bolt appropriate for the mounting surface.
  - Torque wrench to tighten all connections to 10 ft-lbs (138 kgf-cm).
  - 2 x 13mm open-ended wrench or sockets for the M8 mounting bolts.
  - 5mm Allen wrench for the socket button-head cap screws to attach the mount to the IBR.
- Ethernet connections:
  - 17mm open-ended wrench to tighten the weatherized Ethernet boot. See the section on Ethernet connectors for torque specifications.
  - RJ45 Ethernet termination tools.
  - Ethernet cables. The IBR has an integrated switch and can accept up to 3 individual Ethernet connections, though only one is absolutely required to pass data.
- Serial connection (required for initial configuration).
- USB-to-DB9 converter. Required if the PC used for configuration does not have a DB9 connector. Most PCs don't have a DB9 connector, so this usually will be required.
- A safe and suitable means of lifting the equipment and installer at the installation site. (NOTE: The mounting bracket for IBR has holes that can be used to suspend IBR from a utility belt or otherwise as an aid in lifting IBR.)
- Shielded Ethernet cable.
- A laptop for configuring IBR.

6.3 IBR Mounting Bracket

IBR must be mounted on a suitable bracket that will hold IBR securely under all environmental conditions. The base of IBR has four mounting posts for mounting bolts set in a square pattern. Operators have the option to use a mounting bracket purchased from Fastback Networks or to create custom mounting solutions.

Fastback offers a bracket that can be mounted either on a wall or a pole having a minimum diameter of two inches (5.08 cm). Instructions for installing this bracket are shown below.

6.3.1 *Mounting Location* - Choosing the best possible mounting location for IBR is important for safety, security, and link performance.

- Install IBR in a location where access is restricted to authorized service personnel.
- Select a location that is within one hundred meters of a PoE+ source.
- Avoid locations that might present hazards to installation or maintenance crews.

6.3.2 *Fastback Networks' Articulating Bracket* - Fastback Networks offers an articulating mount that can be mounted on walls or masts and adjusted up to ± 45 degrees in elevation and azimuth in 15 degree increments. The Articulating Mount has a plate that attaches to IBR and a part that attaches to the wall or mast. An articulating knuckle provides freedom of movement for positioning and pointing IBR. The diagram below is a guide for assembling the articulating mount and attaching it to IBR.

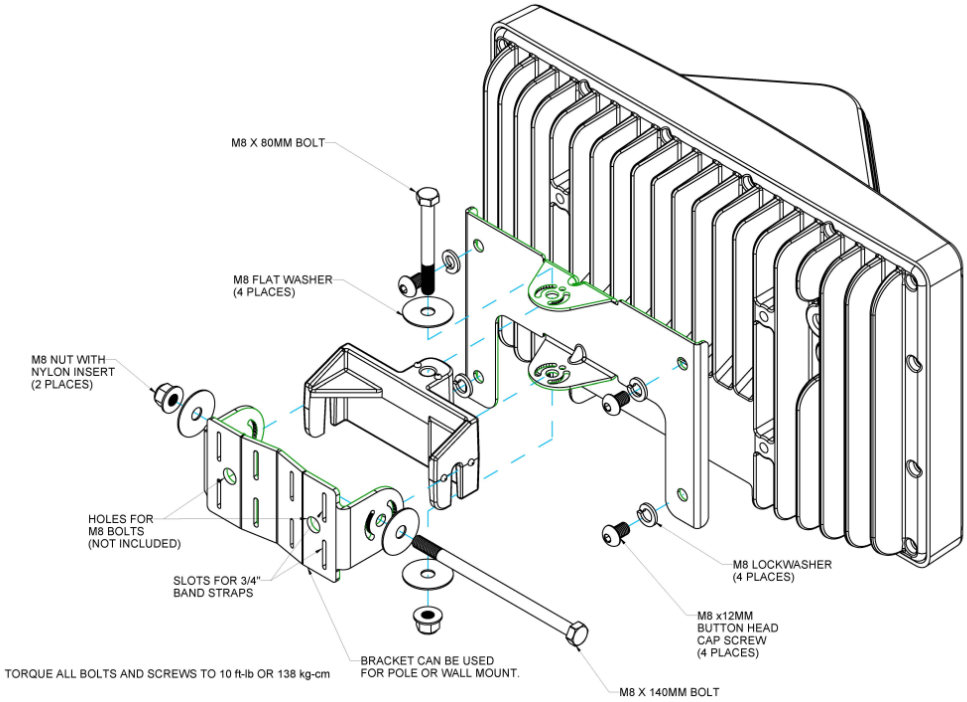

6.4 Power & Ethernet Connections

When IBR has been securely mounted, connect a PoE+ source to port ge0.

Include a secured drip loop for all Ethernet connections to IBR. The loop will provide some strain relief to the RJ-45 connection and prevent water from flowing along the cable to the connector.

The power indicator LED will turn green when power is applied. If the PoE+ source is also connected to an Ethernet source, data will flow through IBR's Ethernet port ge0.

If the power indicator LED does not illuminate when the power connection is made, consider the following:

- Is the RJ-45 connector securely inserted into both the PoE+ source and IBR?
- Is power applied to the PoE+ source? Check the indicator lights on the PoE+ source if available.
- Are the cables of the proper type (CAT5E or CAT6)?
- Are the cables in good working order? (Cables should be certified using a Byte Brothers, Fluke, or similar certifier.)

6.5 Fabricating an Ethernet Cable

The RJ-45 Ethernet connectors on IBR will mate with the GT225360-00 connector from GT Contact Co. LTD. An exploded view of the connector is shown below.

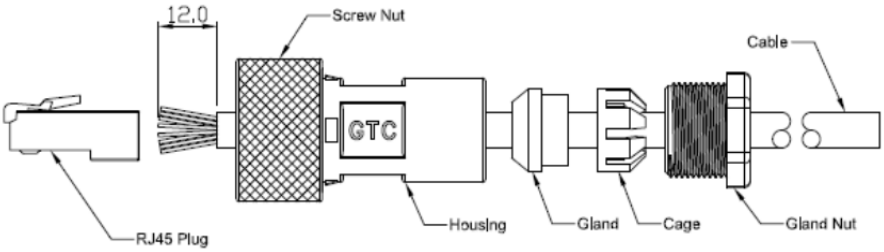

The connector will work with CAT5E and CAT6 cables and other cables having an outer diameter between 5.0 and 6.0 mm. NOTE: Use only weatherproof, shielded cable.

To install the GT225360-00 connector and RF-45 plug on a shielded cable:

- Strip the cable jacket 12.0 mm.
- Thread the cable through the connector components in the order shown in the diagram above.
- Install the RJ-45 plug.
  - Untwist the individual strands.
  - Insert the cables into the RJ-45 plug in the order shown below.

    1. White/orange
    2. Orange
    3. White/green
    4. Blue
    5. White/blue
    6. Green
    7. White/brown
    8. Brown
  - Wrap the ground wire around the cable jacket underneath the back of the RJ-45 plug.
  - Crimp the plug using a crimping tool.
- Assemble the GT225360-00 connector, tightening the gland nut to within 0.6 – 0.7 ft-lb (9.0 – 10.0 kgf-cm).

Connectors may be obtained from Fastback or directly from the manufacturer:

Model: GT225360-00
Supplier: GT Contact Co. LTD.

The images below illustrate assembly of the RF-45 plug.

1.

2. 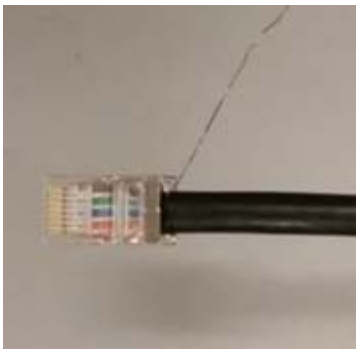

3. 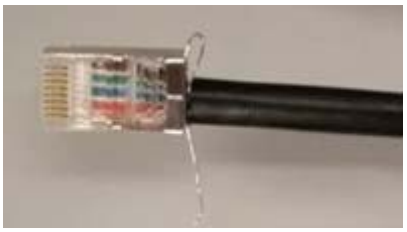

4.

5.

6.6 Surge Suppressor Installation

Install a surge suppressor between the PoE+ injector and IBR as near as possible to the PoE+ injector.

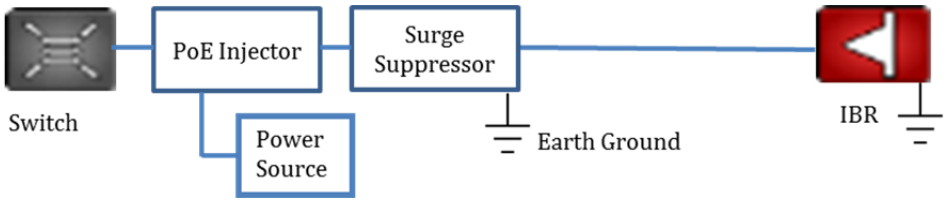

The surge suppressor should be installed ahead of the cable ingress to the enclosure or structure housing the switch in order to maximize protection to the switch. The surge suppressor should be connected to a true earth ground with materials that meet the manufacturer's specifications.

NOTE: The total length of cable between the switch and IBR must not exceed one hundred meters (100m).

6.7 Communication with IBR Via the Serial Port, Telnet, or SSH (Optional)

A local operator can configure IBR by connecting the Fastback-supplied serial cable to a PC with a DB-9 RS-232 connection. If such a connection is not available, a USB-to-serial converter may be used. (See the section titled Serial Console.)

The operator may also telnet or SSH to access the CLI. The IBR default IP address is 192.168.128.101 or 192.168.128.102 for IBR-1000-57-JP and IBR-1000-75-JP, respectively. Connect a PC via Ethernet cable to the PoE+ injector. IBR Port 1 and Port 2 are disabled by default. Only Port 0 is accessible via the connection on the PoE+ supply. Ensure the PC has an IP address in the range of 192.168.128.<0-254>. Immediately after configuring the IBR IP address as indicated below, change the IP address on the PC to match the subnet configured on the IBR.

Once the operator has access to the CLI, set the same link-ID on both ends of the link to ensure the link doesn't accidentally communicate with other Fastback links. Setting an IP address allows remote IBR access. The following are the commands to set the link-id and the IP address:

Prompt	**Command**
IBR102 login:	*admin*
Password:	*(factory-set password is fastback)*
IBR102>	*enable*
Password:	*(factory-set password is fastback)*
IBR102#	*configure terminal*
IBR102(config)#	*interface radio 0*
IBR102(config-if-rad0)#	*link-id <your link-id>*
IBR102(config)#	*interface vlan 1*
IBR102(config-vlan-1)#	*ip address <IP addr> <Netmask>*
IBR102(config-vlan-1)#	*ip default-gateway <GW addr>*
IBR102(config)# *exit*	
IBR102#	*copy running-config startup-config*
IBR102#	

NOTE: When the serial port is not in use, a weatherproof protective cover should be installed over the serial connector on IBR.

6.8 Link Establishment

IBR will automatically select the best combination of channel frequencies and bandwidth for a link.

- Wait for radios to finish booting and establishing a link.
- Use the CLI command shown below to verify that a link has been established.

IBR102 # *show interfaces radio 0 status*

If a link is not automatically established within ten minutes, then consider the following troubleshooting suggestions:

- Check to ensure that the partner IBR on the link is operational.
- Change the direction in which the IBR is pointed.
- Change the IBR's elevation.
- Determine if the link is too long for the environment.

6.9 Pointing & Link Optimization

IBR's transmit and receive antennas each have a one hundred and twenty degree, 3 dB beam width centered on the ridge at the top of the radome. Therefore, aligning or pointing an IBR, as discussed below, means orienting IBR so that the ridge on the radome is facing the desired direction.

6.9.1 *Line-of-Sight and Near Line-of-Sight Links*.

Horizontal Alignment - Orient each IBR so that its radome is pointed toward the other end of the link. Because IBR has a relatively wide (120-degree) 3-dB beam width, a few degrees of misalignment is not likely to have an effect on link performance.

Vertical Alignment – Because IBR has only a fifteen degree 3-dB beam width in the vertical direction, greater care should be taken in setting the elevation angle so that each IBR is pointing as nearly as possible toward the other end of the link.

6.9.2 *Non-Line-of-Sight Links*.

Horizontal Alignment – The process for finding the optimum position for each end of the link depends on whether it is possible to establish a link by aiming the IBRs at each other, and if there is the possibility of reflection from a building. The following is a suggested procedure to use if the IBRs do not synchronize after being aimed towards each other and it is possible to benefit from reflection off a building:

- Start with each IBR in a best-guess orientation toward the other end of the link.
  - Keeping the near IBR's position fixed, rotate the distant IBR hundred and twenty degrees in azimuth., and allow one minute for the link to synchronize.
  - Rotate the distant IBR another one hundred and twenty degrees, and allow another minute for the link to synchronize.
  - Repeat the process a third time.
- Rotate the distant IBR another one hundred and twenty degrees. At this point, it will be in its original position.
- Rotate the near IBR one hundred and twenty degrees. Now repeat the steps in (a) above, rotating the distant IBR through three hundred and sixty degrees in one hundred and twenty degree increments.

When using steps of one hundred and twenty degrees as indicated above, there will be a total of nine possible combinations of positions for the two IBRs. If the radios are rotated only ninety degrees each step, there will be a total of sixteen combinations, however, the resulting alignment might be more optimal.

In a situation where the IBRs synchronize when pointed toward each other, and it is not possible to get a reflection off a building, a more empirical approach might produce a faster result. When a link has been established, rotate one IBR ninety degrees. If the SNR improves, rotate it another ninety degrees, and continue in this way until SNR begins to fall, then move back to the previous position. If SNR does not improve, return the IBR to its original position. Repeat at the other end of the link.

If a link cannot be established, try all sixteen aiming combinations, spending one minute at each combination to give the link time to synchronize. Do this by locking the near end at 0 degrees azimuth, and then aiming the far end of the link at 0, 90, 180, and 360 degrees, spending sixty seconds at each position. Next, move the near end to 90 degrees and repeat at 0, 90, 180, and 360 degrees at the far end. Continue until a link has been established or all sixteen combinations have been tried.

6.10 Path Prediction Tools

Path Prediction Tools are useful for non-line-of-site, near-line-of-site, and line-of-site links. Fastback does not recommend one path prediction tool over another; however, Fastback is committed to working with vendors of path prediction products to maximize the accuracy of predicted paths for IBR. Fastback has worked with the following vendors to maximize accuracy:

- Siradel
- InfoVista Ellipse
- CTS Pathloss

Return to Table of Contents

7. Features & Functionality

7.1 AnyLOS Technology

Fastback's proprietary AnyLOS technology enables operators to use IBR in difficult RF environments without worrying about RF tuning. IBR will automatically adjust the following parameters to maximize throughput:

- Channel bandwidth - either 10, 19, or 38MHz.
- Center frequency.
- Antenna combination - IBR has eight (8) internal antennas and will automatically select the best four for the link being established.
- Modulation Coding Scheme (MCS) – MCS can be any value from 1–10.
- Transmitter output power - IBR will adjust the transmitter output power automatically to avoid exceeding emissions requirements. IBR takes output power into account when estimating the bandwidth available on any given frequency. The frequency vs. output power relationship is shown in the CLI Guide.

The operator cannot manually configure these radio parameters, but can view the settings using CLI, SNMP, or the GUI as follows:

- CLI command: IBR102 # *show interfaces radio 0 status*
- GUI: Monitor, Radio, Status
- SNMP: FBN-RADIO-MIB

7.2 Communication Protocols

IBR can be managed by an operator using:

- CLI: SSH, Telnet, Serial Console
- SNMP

7.3 Software Management

- Software upgrades to IBR can be made by an operator.
- Boot loader recovery can be accomplished by an operator via CLI.
- IBR has the ability to recover on its own from a failed software upgrade.
- Add-on licenses to increase the available throughput of IBR can be downloaded using the GUI. For additional information, see the CLI Guide.

7.4 SNMP

IBR supports SNMP[6] agents using protocols v1 and v2c.

[6] Simple Network Management Protocol

IBR supports SNMP *get* statements for SNMPv2-MIB, IF-MIB, and FBN-RADIO-MIB. Detailed information for configuring SNMP is contained in the *CLI Guide.*

7.5 Switching & Transport

IBR supports 802.1Q (VLAN).

7.6 Data Handling

IBR supports the following OSI[7] Layer 2 standards:

- IEEE 802.3ab (Gigabit Ethernet);
- IEEE 802.3as (frame expansion);
- IEEE 802.1Q (VLANs).

In addition, IBR supports port mirroring to monitor port traffic.

7.7 Carrier Ethernet

IBR conforms to the following MEF[8] specifications:

- MEF 9 – Abstract Test Suite for Ethernet Services at the UNI
- MEF 14 – Abstract Test Suite for Traffic Management Phase 1
- MEF 19 – Abstract Test Suite for UNI Type 1

7.8 Timing & Synchronization

IBR's system clock starts when IBR is powered up and maintains time and date based on Universal Time Coordinated (UTC), also known as Greenwich Mean Time (GMT). The system clock can be set over the network via NTP.

Detailed instructions for configuring IBR timing and for displaying system time and date are contained in the *CLI Guide*.

7.9 Network Time Protocol (NTP)

NTP runs over User Datagram Protocol (UDP), which runs over IP. It is very efficient and typically requires no more than one NTP packet per minute to synchronize IBR's system clock to within one millisecond of the NTP server's clock.

When IBR is configured to receive NTP packets from another network device, the relationship between IBR and that device is called an "association" and it is a server relationship, meaning that IBR will synchronize to the other device (the "server") and the other device will not synchronize to IBR.

By default, NTP is disabled on IBR, no NTP associations are defined, and the NTP daemon is not running. Procedures for enabling and configuring NTP are contained in the *CLI Guide*.

When IBR is running NTP, IBR can be associated with more than one NTP server. Normally, IBR will synchronize to the associated NTP server that has the lowest stratum number; that is the lowest number of hops between the server and its clock source. A stratum 1 time server has a radio or atomic clock directly attached, a stratum 2 time server receives its time through NTP from a stratum 1 time server, etc.

IBR will avoid synchronizing to a server whose time might not have been synchronized or to one whose time is significantly different than the time from other associated servers, even if its stratum is lower.

When NTP is enabled on IBR, NTP time will take precedence over time provided by any other source or method.

[7] Open Systems Interconnection
[8] Metro Ethernet Forum

7.10 System Message Logging

IBR sends the output of system messages and certain Privileged commands to a logging process that can be configured to distribute such messages to a logging file, remote syslog server, or operator's console. Detailed instructions for configuring message logging are contained in the *CLI Guide*.

7.11 Quality of Service (QoS) & Class of Service (CoS)

IBR supports QoS packet prioritization in compliance with IEEE 802.p. By default, QoS is disabled and must be configured and enabled by an operator using the commands and procedures described in this section.

IBR's CLI has commands that allow an operator to create and configure Traffic Classes and Traffic Policies that are associated with specified IBR interfaces. The CLI Guide contains detailed information for configuring QoS/CoS features.

7.12 Security

Security features of IBR include:

- AES encryption on over-the-air links;
- Access control lists;
- Multicast and broadcast storm control;
- Port protection and blocking

Return to Table of Contents

8. Field Test Procedure

The following procedure can be run to test a link after successful installation of IBRs and link establishment, and at other times as necessary.

8.1 Firmware Upgrade

If it is necessary to upgrade IBR's firmware, this can be accomplished using CLI or GUI. See the CLI Guide for detailed instructions.

8.2 RFC 2544 Traffic Tests

- Reboot both IBRs to ensure they are in full automatic mode.
- Ensure MCS is at 10/10 in both directions.
- Connect an RFC 2544 tester and run the RFC 2544 test.
- Note the results, including latency.

When the channel bandwidth is set to 38 MHz, the expected outcome is 320 Mbps in both directions with a packet drop rate less than 0.05%.

8.3 Endurance Test

Establish traffic in both directions at 80% capacity and run continuously for seven (7) days.

The expected outcome is that there will be no reboots and total frame losses will be less than 5.0E-4.

8.4 Traffic Classification Test

- Configure an Ethernet tester for two streams, as follows:
  - Stream 1: CoS=7; BW=50 Mbps
  - Stream 2: CoS=6, BW=300 Mbps

- Observe that there are a negligible number of drops on Stream 1.

The expected outcome is that all higher priority traffic will be served ahead of lower priority traffic.

Return to Table of Contents

Appendix A: Troubleshooting Guide

NOTE: These procedures have been developed by Fastback Networks to assist a field engineer in troubleshooting an IBR that does not appear to be working properly. These procedures are not intended to replace or supersede a company's standard procedures for operating and troubleshooting network devices.

This Troubleshooting Guide is organized by symptoms that an operator might observe that suggest that IBR is not operating properly.

A 1. IBR Reboots During the Boot Process

If IBR is repeatedly rebooting during the boot process and displaying the following message:

Message: "Uncompressing Linux… done, booting the kernel".

Try the following: Replace the PoE+ injector and try booting the IBR again. It might be that the PoE+ power source is not providing sufficient power to IBR. IBR requires at least 35 watts.

A 2. IBRs Cannot Establish A Link

Both IBRs on the link appear to be working properly, but cannot establish a link.

2.1. Turn Transmitters ON

Turn both transmitters ON using the following procedure:

a. Check the status of the link with the following CLI command (where *IBR101* is shown as the host name):

IBR101 # *show interface radio 0 status*

b. The status report that is displayed should state that IBR is UP and the Transmitter is ON.

Status: UP, 0d 2h 44m 52s, Transmitter is ON

c. If the Transmitter is OFF, turn it on with the following CLI commands:

IBR101 # *configure terminal*

IBR101 (config)# *interfaces radio 0*

IBR101 (config-rad-0)# *tx on*

d. Verify that the transmitter is ON:

IBR101 (config-rad-0)# *do show interface radio 0 status*

e. If the transmitter still is not ON, reboot the IBR:

IBR101 (config-rad-0)# *do reload*

f. When the unit is back up repeat the sequence above to turn ON the transmitter. If the transmitter still in not ON, escalate the problem to the next higher support level.

2.2. Check IBR Compatibility

When both transmitters are confirmed to be ON, verify that their respective transmit and receive frequencies mirrored; that is, that the receive frequency of each IBR is the same as the transmit frequency of the other IBR. The following are sample radio status outputs:

5.8 IBR Frequency and Bandwidth:
TX: 5800 MHz RX: 5300 MHz

TX BW: 35 MHz RX BW: 35 MHz

5.3 IBR Frequency and Bandwidth:
TX: 5300 MHz RX: 5800 MHz
TX BW: 35 MHz RX BW: 35 MHz

NOTES: These values might be changing as long as RRC is running.
The bandwidths do not need to match.

From the report, confirm that the two IBRs are compatible. In the example above, the link has one IBR that transmits in the 5.8 GHz band receives in the 5.3 GHz band, and one IBR that transmits in the 5.3 GHz band and receives in the 5.8 GHz band. Two identical radios **will not** communicate with one another.

2.3. Reset the Link

Reset the link with a soft reset. (If practical, do this on both ends of the link.)

a. Check the status of the link with the following CLI commands:

IBR101 # *show interface radio 0 status*

b. If the Status indicates the Transmitter is ON but the Status is DOWN, do the following:

IBR101 # *configure terminal*

IBR101 (config) # *interfaces radio 0*

IBR101 (config-rad-0) # *rrc soft-reset*

This will reset the link and radio, forcing a resync.

c. After 3 to 5 minutes check the radio status again.

IBR101 (config-rad-0) # *exit*

IBR101 (config) # *exit*

IBR101 # *show interface radio 0 status*

2.4. Reboot the IBRs

a. If a Soft-Reset does not establish a link then save any configuration changes and reboot the IBRs.

IBR101 # *copy running-config startup-config*

IBR101 # *reload*

b. After 3 to 5 minutes check the radio status again.

IBR101 # *show interface radio 0 status*

2.5. Check EIRP, RSL, & SNR

If the Status indicates the Link Status still is DOWN, check EIRP, RSL, and SNR. Values shown below are samples only:

EIRP: (should be > 15 dBm)
S0: 27.0 dBm S1: 27.0 dBm Total: 30.0 dBm

RSL: (should be > - 84 dBm; remember that these are negative numbers)
1: - 68.5 dBm 2: - 69.0 dBm 3: - 68.0 dBm 4: - 68.5 dBm

SNR: (short-term SNR should be > 3 dB)
Short-term SNR: S0: 27 dB S1: 27 dB
Long-term SNR: S0: 27 dB S1: 27 dB

If any of these values is outside the required operating range, it might be necessary to reposition (i.e., rotate, elevate, or move) one or both IBRs, or to swap ends of the link.

2.6. Reposition IBR

It might be necessary to perform one or more of the following procedures for either or both IBRs. Which repositioning strategy should be tried first will be a decision the field engineer will need to make based on observations at the mounting locations.

In all cases, be mindful of cable lengths and tie-downs, and power connections.

CAUTION: WHEN POWER IS APPLIED TO IBR, IBR AUTOMATICALLY WILL BEGIN TRANSMITTING. DO NOT TRY TO REPOSITION IBR WHEN POWER IS CONNECTED.

2.7. Rotate IBR

IBR can be rotated to point more closely in the direction of the other IBR or toward some object that might provide reflection of the signals. The objective is to improve received signals at both ends of the link.

1) Loosen the mounting bracket.
2) Rotate the IBR to the desired alignment position.
3) Retighten the mounting bracket.
4) Check the radio status to verify signal level improvement.

   IBR101 # *show interface radio 0 status*

5) Repeat until the signal level improves and a link is established.

2.8. Elevate IBR

If IBR is mounted on a pole or mast, it might be possible to move it up without removing IBR from its mounting bracket. If IBR is mounted on a wall, it will be necessary to remove IBR from the bracket and move the wall-mount portion of the bracket to a higher location.

Elevating IBR only a foot or two can make a significant improvement in reception.

2.9. Change Location

Often a more suitable location near the current location can be selected to reduce interference from physical (non-radiating) objects, and/or from sources of RF radiations (e.g., other radios) that are operating in the area. A new location on the same rooftop or even on the same mounting asset often can improve reception signal levels.

2.10. Reposition Each IBR to the Other End of the Link

Because the two IBRs receive in different frequency bands, swapping ends of the link can improve link performance when one of the radios is operating near another radio that is transmitting near to the IBR's receive band. This is also often the easiest solution since the existing mounts and connections can be utilized and only the IBRs need to be moved.

Return to Table of Contents

A 3. Packet Flood or Storm Condition

If an IBR pair with a default configuration establishes a wireless link and the connecting Ethernet interfaces are connected to the same layer 2 network, a loop will be formed and a broadcast storm will occur. When this happens, the network interfaces will become inaccessible, and the IBR CLI will become slow to respond. All other devices on the collision domain will be inaccessible.

By default, all IBR Ethernet ports are assigned natively to VLAN1. To avoid creating a loop, configure a trunk native interface on gigabit Ethernet 3 as shown in the following example:

IBR101 (config) # *interface vlan 2*

IBR101 (config-vlan2) # *no shutdown*

IBR101 (config-vlan2) # *exit*

IBR101 (config) # *interface gigabitEthernet 3*

IBR101 (config-if-ge3)# *no switchport trunk native vlan 1*

IBR101 (config-if-ge3) # *switchport trunk native vlan 2*

IBR101 (config-if-ge3) # *do copy running-config startup-config*

It is necessary to perform this setup on only one side of the link, unless there is untagged traffic on the link, in which case it should be performed on both sides of the link.

Network loops also can be avoided by creating a separate management interface on each IBR. See the *IBR Administration & Command Line Interface Guide* for information about creating a management interface.

Return to Table of Contents

A 4. Link Is Established But Not Passing Traffic

Confirm that a link has been established by (i) pinging the opposite end, (ii) checking the interface counters, and/or (iii) viewing the radio link status using the following command:

IBR101 # *show interface radio 0 status*

If a link has been established, but will not pass traffic, do the following:

a. Confirm that IBR is configured to pass all VLAN traffic, regardless of VLAN, by using the bridge command as shown below.

   IBR101 (config) # *bridge linklocalframes gigabitethernet 1*

   Do this on both sides of the link using the connected data port on VLAN2 which, in this case, is ge1.

b. Check syslog for messages that indicate that the link is going up and down.

   IBR101 # *show logging active*

   NOTE: Use *Ctrl-C* to stop the display from continuing to scroll.

c. Confirm that MTU is set correctly on both IBRs.

   IBR101 (config) # *mtu 9712*

   NOTE*:* When MTU is set to 9712, it will be 9712 between the wired switch ports; however, the over-the-air MTU is limited to 2599.

d. Check history logs for radio conditions prior to the time when the link would not pass traffic.

   IBR101 # *show interface radio 0 history mcs*

   IBR101 # *show interface radio 0 history bler*

   If history shows that MCS dropped to 1 and BLER increased before the link stopped passing traffic, the cause might be interference.

Return to Table of Contents

A 5. IBR Cannot Be Reached Via the Network

Follow these steps if IBR cannot be reached via the network.

a. Establish communications with IBR via the serial interface (See the section on communicating with IBR via CLI).

b. Confirm that an Ethernet interface is enabled and connected to the network:

IBR101 # *show interfaces*

c. If the interface is connected, but not enabled, execute the following commands:

IBR101 (config) # *interface gigabitethernet 2*

where 2 is used as an example (could be 0, 1, or 2).

IBR101 (config-if-ge2) # *no shutdown*

IBR101 (config-if-ge2) # *exit*

IBR101 (config) # *exit*

IBR101 # *show ip interfaces*

The following is a sample output.

```
GigabitEthernet ge0 is up, line protocol is up
   Hardware is Gigabit Ethernet Port
   MTU 2000, BW 1G
   FD, 1G, autonegotiate Yes, medium type is Copper
   input flow-control is off, output flow-control is off
   Mdix status is: Auto
GigabitEthernet ge1 is down, line protocol is down
   Hardware is Gigabit Ethernet Port
   MTU 2000, BW Auto-speed
   Auto-duplex, Auto-speed, autonegotiate Yes, medium type is Copper
   input flow-control is off, output flow-control is off
   Mdix status is: Auto
GigabitEthernet ge2 is disabled, line protocol is disabled
   Hardware is Gigabit Ethernet Port
   MTU 2000, BW Auto-speed
   Auto-duplex, Auto-speed, autonegotiate Yes, medium type is Copper
   input flow-control is off, output flow-control is off
   Mdix status is: Auto
```

In the output above:

- *up* means the interface is enabled and connected;
- *down* means the interface is enabled, but not connected to another device; and
- *disabled* means the interface might not be connected.

d. If the Ethernet interface is connected and enabled, check that the default gateway is configured and responds to pings.

e. Verify any VLAN settings on both IBR and the connecting device.

f. If an Ethernet link is unexpectedly down:

- Check the Ethernet cable with a suitable cable certifier (e.g., Fluke DTX 1800, or Byte Brothers RWC 1000K).
- Check that speed and duplex settings on IBR match those on the switch port.

Return to Table of Contents

A 6. IBR Is Dropping Frames

Payload frames may be dropped by the switch (in IBR) due to a full queue or by the radio due to errors. Frames dropped over the air are measured at the receiver. IBR reports switch and radio drops in switch counters and radio counters respectively that can be viewed using CLI, SNMP and GUI as discussed below.

a. Payload dropped by the switch.

CLI:

IBR101 # *show interfaces counters drops*

SNMP:

IF-MIB ifInDiscards and ifInErrors

InErrors show the packets discarded because they fail CRC check. InDiscards shows the packets that were dropped because the output queue was full.

b. Payload dropped over the air.

Use CLI to show payload packet error rate and counters:

IBR101 # *show interfaces radio 0 status*

IBR101 # *show interfaces radio 0 counters*

Using SNMP, payload packet error can be seen under FBN-RADIO-MIB ibrRxPktDropRate

Using the Web UI, payload packet error rate is shown on the Monitor/Dashboard screen.

c. Frames dropped by the switch.

The switch will drop frames when the transmit queue fills. There is one transmit queue for each COS level. Transmit queues will fill whenever the offered load exceeds either the IBR-imposed throughput limit or the over-the-air capacity. The IBR-imposed throughput limit might be configured via a policy map. Policy map configurations can be displayed with the following command:

IBR101 # *show running-config*

To determine if the offered load is close to the throughput use on of the following:

CLI:

IBR101 # *show interfaces radio 0 status*

Compare "Payload" to RX MCS S0 + RX MCS S1.

Using Web UI, view the Monitor/Radio/Report screen to view:

MCS RX Theoretical & RX Actual Throughput

MCS TX Theoretical & TX Actual Throughput

Using SNMP, FBN-RADIO-MIB*:*

ibrRxTputRate and *ibrTxTputRate* will show the payload throughput.

ibrRxTpS0+ ibrRxTpS1 and *ibrTxTpS0+ ibrTxTpS1* will show carrying capacity.

Return to Table of Contents

A 7. Communicating With IBR Via Command Line Interface (CLI)

CLI can be used to troubleshoot and configure IBR. The following are the steps for logging onto IBR. If IBR has previously been configured, the field engineer will need to know the valid user name and password to use.

a. To communicate with IBR, log onto IBR via one of the following options:

- Serial Console w/settings

  - XON/XOFF is disabled
  - Bitrate = 115200bps
  - No Parity
  - 8 bits
  - 1 stop bit
- SSH
- Telnet

Successful connection will return the Login prompt shown below.

IBR login:

b. Log onto IBR using a valid user ID and password. IBR is shipped with the following default credentials:

user names: ***fbn*** and ***admin***	either can be used
password: ***fastback***	valid for both user names

Entering a valid user name and password will place the operator in CLI User Mode and the following prompt will be displayed (IBR101 is shown as the default host name):

IBR101 >

c. Enter CLI Privileged mode using the following command:

IBR101 > *enable*

The same password that was used to log onto IBR can be used (e.g., **fastback** for factory default).

The Privileged Mode prompt will be displayed:

IBR101 #

All CLI resources are available in Privileged Mode. For detailed information, see the *IBR Administration and Command Line Interface Guide*.

Return to Table of Contents

A 8. Contacting Fastback Technical Support

Fastback Networks Product Documentation Downloads:
https://fastbacknetworks.zendesk.com/hc/en-us/categories/200075157-Documentation

Fastback Networks Support Website:
http://www.fastbacknetworks.com/support/

For help with a specific product issue:

http://www.fastbacknetworks.com/support/faq

Contact Fastback Networks Technical Support:
email: support@fastbacknetworks.com telephone (408) 430-5440 option 2

Return to Table of Contents

Federal Communications Commission (Fcc) Compliance Statement

The equipment that is the subject of this Guide has been tested and found to comply with the limits for a Class B digital device pursuant to Part 15 of the FCC Rules. These limits are designed to provide reasonable protection against harmful interference when the equipment is properly installed and operated in accordance with instructions contained in this manual. In addition, this equipment complies with FCC radiation exposure limits for operation in an uncontrolled environment.

The equipment should not be operated if it becomes out of compliance with FCC Rules. In order to ensure continued compliance with FCC Rules, the equipment:

- Should be installed in a restricted area that is accessible only by authorized service personnel.
- Should not be operated within thirty centimeters (30 cm) of personnel.
- Should not be operated if it is or becomes damaged.
- Should be connected to other devices by shielded cables of the correct types.
- Should not be repaired or modified except by Fastback Networks.

This device complies with part 15 of **FCC rules**. Operation is subject to the following two conditions: (1) This device may not cause harmful interference, and (2) This device must accept any interference received, including interference that may cause undesired operation.

Industry Canada Licence-Exempt RSS Compliance

This device complies with **Industry Canada** licence-exempt RSS standard(s). Operation is subject to the following two conditions: (1) this device may not cause interference, and (2) this device must accept any interference, including interference that may cause undesired operation of the device.

Le présent appareil est conforme aux CNR d'Industrie Canada applicables aux appareils radio exempts de licence. L'exploitation est autorisée aux deux conditions suivantes : (1) l'appareil ne doit pas produire de brouillage, et (2) l'utilisateur de l'appareil doit accepter tout brouillage radioélectrique subi, même si le brouillage est susceptible d'en compromettre le fonctionnement.

High-power radars are allocated as primary users (i.e. priority users) of the bands 5250-5350 MHz and these radars could cause interference and/or damage to LE-LAN devices.

Failure to comply with these instructions, or changes or modifications to this device that are not expressly approved by the manufacturer, could void the operator's authorization to operate the equipment.

European Union & European Fair Trade Association Regulatory Compliance

IBR-2A and IBR-2B may be operated in the countries that comprise the member countries of the European Union and the European Fair Trade Association. Those countries, listed below, are referred to as The European Community throughout this document:

Austria, Belgium, Bulgaria, Cyprus, Czech Republic, Denmark, Estonia, Finland, France, Germany, Greece, Hungary, Iceland, Ireland, Italy, Latvia, Lichtenstein, Lithuania, Luxembourg, Malta, Netherlands, Norway, Poland, Portugal, Romania, Slovakia, Slovenia, Spain, Sweden, Switzerland, United Kingdom.

Declaration of Conformity

CE Marking by this symbol indicates compliance with the Essential Requirements of the R&TTE Directive of the European Union (1999/5/EC).

Warning!
This is a Class B product. In a domestic environment, this product may cause radio interference, in which case, the user may be required to take appropriate measures.

Achtung!
Dieses ist ein Gerät der Funkstörgrenzwertklasse B. In Wohnbereichen können bei Betrieb dieses Gerätes Rundfunkstörungen auftreten, in welchen Fällen der Benutzer für entsprechende Gegenmaßnahmen verantwortlich ist.

Attention!
Ceci est un produit de Classe B. Dans un environnement domestique, ce produit risque de créer des interférences radioélectriques, il appartiendra alors à l'utilisateur de prendre les mesures spécifiques appropriées.

European Community Declaration of Conformity

A copy of the signed Declaration of Conformity can be downloaded from the following web site:
http://fbnet.co/IBR2A_IBR2B_DoC_May_2014.pdf

Bulgaria	български С това, FASTBACK NETWORKS обявява, че този модел на радио на IBR-2A & IBR-2B, е със съгласие с съществените изисквания и други важни условия на директива 1999/5 на европейски съюз
Czech Republic	Èesky FASTBACK NETWORKS tímto prohlašuje, že tento IBR-2A & IBR-2B, je ve shodì se základními požadavky a dalšími pøíslušnými ustanoveními smìrnice 1999/5/ES.
Denmark	Dansk Undertegnede FASTBACK NETWORKS erklærer herved, at følgende udstyr IBR-2A & IBR-2B, overholder de væsentlige krav og øvrige relevante krav i direktiv 1999/5/EF.
English	English Hereby, FASTBACK NETWORKS declares that this IBR-2A & IBR-2B, is in compliance with the essential requirements and other relevant provisions of Directive 1999/5/EC.
Estonia	Eesti Käesolevaga kinnitab FASTBACK NETWORKS seadme IBR-2A & IBR-2B, vastavust direktiivi 1999/5/EÜ põhinõuetele ja nimetatud direktiivist tulenevatele teistele asjakohastele sätetele.
Finland	Suomi FASTBACK NETWORKS vakuuttaa täten että IBR-2A & IBR-2B, tyyppinen laite on

	direktiivin 1999/5/EY oleellisten vaatimusten ja sitä koskevien direktiivin muiden ehtojen mukainen.
France	Français
	Par la présente FASTBACK NETWORKS déclare que l'appareil IBR-2A & IBR-2B, est conforme aux exigencies essentielles et aux autres dispositions pertinentes de la directive 1999/5/CE.
German	Deutsch
	Hiermit erklärt FASTBACK NETWORKS, dass sich das Gerät IBR-2A & IBR-2B, in Übereinstimmung mit den grundlegenden Anforderungen und den übrigen einschlägigen Bestimmungen der Richtlinie 1999/5/EG befindet.
Greece	Ελληνική
	ΜΕ ΤΗΝ ΠΑΡΟΥΣΑ FASTBACK NETWORKS ΗΛ.ΝΕΙ ΟΤΙ IBR-2A & IBR-2B, ΣΥΜΜΟΡΦ.ΝΕΤΑΙ ΠΡΟΣ ΤΙΣ ΟΥΣΙ..ΕΙΣ ΑΠΑΙΤΗΣΕΙΣ ΚΑΙ ΤΙΣ ΛΟΙΠΕΣ ΣΧΕΤΙΚΕΣ .ΙΑΤΑΞΕΙΣ ΤΗΣ Ο.ΗΓΙΑΣ 1999/5/ΕΚ.
Hungary	Magyar
	Alulírott, FASTBACK NETWORKS nyilatkozom, hogy a IBR-2A & IBR-2B, megfelel a vonatkozó alapvetõ követelményeknek és az 1999/5/EC irányelv egyéb elõírásainak.
Italy	Italiano
	Con la presente FASTBACK NETWORKS dichiara che questo IBR-2A & IBR-2B, è conforme ai requisiti essenziali ed alle alter disposizioni pertinenti stabilite dalla direttiva 1999/5/CE.
Latvia	Latviski
	Ar šo FASTBACK NETWORKS deklarç, ka IBR-2A & IBR-2B, atbilst Direktîvas 1999/5/EK bûtiskajâm prasîbâm un citiem ar to saistîtajiem noteikumiem.
Lithuania	Lietuviø
	Šiuo FASTBACK NETWORKS deklaruoja, kad šis IBR-2A & IBR-2B, atitinka esminius reikalavimus ir kitas 1999/5/EB Direktyvos nuostatas.
Malta	Malti
	Hawnhekk, FASTBACK NETWORKS, jiddikjara li dan IBR-2A & IBR-2B, jikkonforma maltiijiet essenzjali u ma provvedimenti orajn relevanti li hemm fid-Dirrettiva 1999/5/EC.
Netherlands	Netherlands
	Hierbij verklaart FASTBACK NETWORKS dat het toestel IBR-2A & IBR-2B, in overeenstemming is met de essentiële eisen en de andere relevante bepalingen van richtlijn 1999/5/EG.
Poland	Polski
	Niniejszym FASTBACK NETWORKS ooewiadcza, ¿e IBR-2A & IBR-2B, jest zgodny z zasadniczymi wymogami oraz pozosta^{3}ymi stosownymi postanowieniami Dyrektywy 1999/5/EC.
Portugal	Português
	FASTBACK NETWORKS declara que este IBR-2A & IBR-2B, está conforme com os requisitos essenciais e outras disposições da Directiva 1999/5/CE.
Romania	Român
	Astfel, FASTBACK NETWORKS declarã acel acest IBR-2A & IBR-2B, este în conformitate cu cerinþele necesare ºi proviziile alte semnificative de Directive 1999 5 EC.
Slovakia	Slovensky
	FASTBACK NETWORKS týmto vyhlasuje, že IBR-2A & IBR-2B spåòa základné požiadavky a všetky príslušné ustanovenia Smernice 1999/5/ES.
Slovenia	Slovensko
	FASTBACK NETWORKS izjavlja, da je ta IBR-2A & IBR-2B, v skladu z bistvenimi zahtevami in ostalimi relevantnimi doloèili directive 1999/5/ES.

Spain	Español Por medio de la presente FASTBACK NETWORKS declara que el IBR-2A & IBR-2B, cumple con los requisitos esenciales y cualesquiera otras disposiciones aplicables o exigibles de la Directiva 1999/5/CE.
Sweden	Svenska Härmed intygar FASTBACK NETWORKS att denna IBR-2A & IBR-2B, står I överensstämmelse med de väsentliga egenskapskrav och övriga relevanta bestämmelser som framgår av direktiv 1999/5/EG.

WEEE Statement

This symbol on the product or its packaging indicates that this product must not be disposed of with your other household waste. Instead, it is your responsibility to dispose of your waste equipment by handing it over to a designated collection point for the recycling of waste electrical and electronic equipment. The separate collection and recycling of your waste equipment at the time of disposal will help conserve natural resources and ensure that it is recycled in a manner that protects human health and the environment. For more information about where you can drop off your waste for recycling, please contact your local authority, or where you purchased your product.

Reference: The Waste Electrical and Electronic Equipment Directive (WEEE Directive 2012/19/EU)

Return to Table of Contents