EG95 Hardware Design

Contents

About the Document **2**
Contents **5**
Table Index **7**
Figure Index **9**

1 Introduction **11**
1.1. Safety Information 12

2 Product Concept **13**
2.1. General Description 13
2.2. Key Features 14
2.3. Functional Diagram 17
2.4. Evaluation Board 18

3 Application Interfaces **19**
3.1. General Description 19
3.2. Pin Assignment 20
3.3. Pin Description 21
3.4. Operating Modes 28
3.5. Power Saving 29
3.5.1. Sleep Mode 29
3.5.1.1. UART Application 29
3.5.1.2. USB Application with USB Remote Wakeup Function 30
3.5.1.3. USB Application with USB Suspend/Resume and RI Function 30
3.5.1.4. USB Application without USB Suspend Function 31
3.5.2. Airplane Mode 32
3.6. Power Supply 32
3.6.1. Power Supply Pins 32
3.6.2. Decrease Voltage Drop 33
3.6.3. Reference Design for Power Supply 34
3.6.4. Monitor the Power Supply 35
3.7. Power-on/off Scenarios 35
3.7.1. Turn on Module Using the PWRKEY 35
3.7.2. Turn off Module 37
3.7.2.1. Turn off Module Using the PWRKEY Pin 37
3.7.2.2. Turn off Module Using AT Command 37
3.8. Reset the Module 38
3.9. (U)SIM Interfaces 39
3.10. USB Interface 42
3.11. UART Interfaces 43
3.12. PCM and I2C Interfaces 46
3.13. SPI Interface 48
3.14. Network Status Indication 49

3.15. STATUS....50
3.16. ADC Interface....51
3.17. Behaviors of RI....51
3.18. USB_BOOT Interface....52

4 GNSS Receiver....54
4.1. General Description....54
4.2. GNSS Performance....54
4.3. Layout Guidelines....55

5 Antenna Interfaces....56
5.1. Main/Rx-diversity Antenna Interfaces....56
5.1.1. Pin Definition....56
5.1.2. Operating Frequency....56
5.1.3. Reference Design of RF Antenna Interface....57
5.1.4. Reference Design of RF Layout....58
5.2. GNSS Antenna Interface....60
5.3. Antenna Installation....61
5.3.1. Antenna Requirement....61
5.3.2. Recommended RF Connector for Antenna Installation....62

6 Electrical, Reliability and Radio Characteristics....64
6.1. Absolute Maximum Ratings....64
6.2. Power Supply Ratings....64
6.3. Operation and Storage Temperatures....65
6.4. Current Consumption....66
6.5. RF Output Power....72
6.6. RF Receiving Sensitivity....73
6.7. Electrostatic Discharge....75
6.8. Thermal Consideration....76

7 Mechanical Dimensions....78
7.1. Mechanical Dimensions of the Module....78
7.2. Recommended Footprint....80
7.3. Top and Bottom Views of the Module....81

8 Storage, Manufacturing and Packaging....82
8.1. Storage....82
8.2. Manufacturing and Soldering....83
8.3. Packaging....84

1 Introduction

This document defines the EG95 module and describes its air interface and hardware interface which are connected with customers' applications.

This document can help customers quickly understand module interface specifications, electrical and mechanical details, as well as other related information of EG95 module. Associated with application note and user guide, customers can use EG95 module to design and set up mobile applications easily.

1.1. Safety Information

The following safety precautions must be observed during all phases of operation, such as usage, service or repair of any cellular terminal or mobile incorporating EG95 module. Manufacturers of the cellular terminal should send the following safety information to users and operating personnel, and incorporate these guidelines into all manuals supplied with the product. If not so, We assumes no liability for customers' failure to comply with these precautions.

	Full attention must be given to driving at all times in order to reduce the risk of an accident. Using a mobile while driving (even with a handsfree kit) causes distraction and can lead to an accident. Please comply with laws and regulations restricting the use of wireless devices while driving.
	Switch off the cellular terminal or mobile before boarding an aircraft. The operation of wireless appliances in an aircraft is forbidden to prevent interference with communication systems. If the device offers an Airplane Mode, then it should be enabled prior to boarding an aircraft. Please consult the airline staff for more restrictions on the use of wireless devices on boarding the aircraft.
	Wireless devices may cause interference on sensitive medical equipment, so please be aware of the restrictions on the use of wireless devices when in hospitals, clinics or other healthcare facilities.
	Cellular terminals or mobiles operating over radio signals and cellular network cannot be guaranteed to connect in all possible conditions (for example, with unpaid bills or with an invalid (U)SIM card). When emergent help is needed in such conditions, please remember using emergency call. In order to make or receive a call, the cellular terminal or mobile must be switched on in a service area with adequate cellular signal strength.
	The cellular terminal or mobile contains a transmitter and receiver. When it is ON, it receives and transmits radio frequency signals. RF interference can occur if it is used close to TV set, radio, computer or other electric equipment.
	In locations with potentially explosive atmospheres, obey all posted signs to turn off wireless devices such as your phone or other cellular terminals. Areas with potentially explosive atmospheres include fuelling areas, below decks on boats, fuel or chemical transfer or storage facilities, areas where the air contains chemicals or particles such as grain, dust or metal powders, etc.

2 Product Concept

2.1. General Description

EG95 module is an embedded 4G wireless communication module with receive diversity. It supports LTE-FDD/WCDMA/GSM wireless communication, and provides data connectivity on LTE-FDD, DC-HSDPA, HSPA+, HSDPA, HSUPA, WCDMA, EDGE and GPRS networks. It can also provide voice functionality [1)] to meet customers' specific application demands. EG95 contains 4 variants: EG95-E, EG95-NA, EG95-EX [2)] and EG95-NAX [2)]. The following table shows the frequency bands of EG95 series module.

Table 1: Frequency Bands of EG95 Series Module

Module	LTE Bands (with Rx-diversity)	WCDMA (with Rx-diversity)	GSM	GNSS [2)]
EG95-E	FDD: B1/B3/B7/B8/B20/B28A	B1/B8	900/1800MHz	Not supported
EG95-NA	FDD: B2/B4/B5/B12/B13	B2/B4/B5	Not supported	GPS, GLONASS, BeiDou/Compass, Galileo, QZSS
EG95-EX [2)]	FDD: B1/B3/B7/B8/B20/B28	B1/B8	900/1800MHz	GPS, GLONASS, BeiDou/Compass, Galileo, QZSS
EG95-NAX [2)]	FDD: B2/B4/B5/B12/B13/B25/B26	B2/B4/B5	Not supported	GPS, GLONASS, BeiDou/Compass, Galileo, QZSS

NOTES

1. [1)] EG95 contains **Telematics** version and **Data-only** version. **Telematics** version supports voice and data functions, while **Data-only** version only supports data function.
2. [2)] EG95-EX and EG95-NAX are based on ThreadX modules.
3. [3)] GNSS function is optional.

With a compact profile of 29.0mm × 25.0mm × 2.3mm, EG95 can meet almost all requirements for M2M applications such as automotive, smart metering, tracking system, security, router, wireless POS, mobile computing device, PDA phone, tablet PC, etc.

EG95 is an SMD type module which can be embedded into applications through its 106 LGA pads.

EG95 is integrated with internet service protocols like TCP, UDP and PPP. Extended AT commands have been developed for customers to use these internet service protocols easily.

2.2. Key Features

The following table describes the detailed features of EG95 module.

Table 2: Key Features of EG95 Module

Feature	Details
Power Supply	Supply voltage: 3.3V~4.3V Typical supply voltage: 3.8V
Transmitting Power	Class 4 (33dBm±2dB) for EGSM900 Class 1 (30dBm±2dB) for DCS1800 Class E2 (27dBm±3dB) for EGSM900 8-PSK Class E2 (26dBm±3dB) for DCS1800 8-PSK Class 3 (24dBm+1/-3dB) for WCDMA bands Class 3 (23dBm±2dB) for LTE-FDD bands
LTE Features	Support up to non-CA Cat 4 FDD Support 1.4/3/5/10/15/20MHz RF bandwidth Support MIMO in DL direction FDD: Max 150Mbps (DL)/Max 50Mbps (UL)
UMTS Features	Support 3GPP R8 DC-HSDPA, HSPA+, HSDPA, HSUPA and WCDMA Support QPSK, 16-QAM and 64-QAM modulation DC-HSDPA: Max 42Mbps (DL) HSUPA: Max 5.76Mbps (UL) WCDMA: Max 384Kbps (DL)/ Max 384Kbps (UL)
GSM Features	**R99:** CSD: 9.6kbps **GPRS:** Support GPRS multi-slot class 33 (33 by default) Coding scheme: CS-1, CS-2, CS-3 and CS-4 Max 107Kbps (DL), Max 85.6Kbps (UL) **EDGE:**

	Support EDGE multi-slot class 33 (33 by default) Support GMSK and 8-PSK for different MCS (Modulation and Coding Scheme) Downlink coding schemes: CS 1-4 and MCS 1-9 Uplink coding schemes: CS 1-4 and MCS 1-9 Max 296Kbps (DL)/Max 236.8Kbps (UL)
Internet Protocol Features	Support TCP/UDP/PPP/FTP/FTPS/HTTP/HTTPS/NTP/PING/QMI/NITZ/MMS/SMTP/SSL/MQTT/FILE/CMUX*/SMTPS* protocols Support PAP (Password Authentication Protocol) and CHAP (Challenge Handshake Authentication Protocol) protocols which are usually used for PPP connections
SMS	Text and PDU modes Point-to-point MO and MT SMS cell broadcast SMS storage: ME by default
(U)SIM Interfaces	Support 1.8V and 3.0V (U)SIM cards
Audio Features	Support one digital audio interface: PCM interface GSM: HR/FR/EFR/AMR/AMR-WB WCDMA: AMR/AMR-WB LTE: AMR/AMR-WB Support echo cancellation and noise suppression
PCM Interface	Used for audio function with external codec Support 16-bit linear data format Support long frame synchronization and short frame synchronization Support master and slave mode, but must be the master in long frame synchronization
USB Interface	Compliant with USB 2.0 specification (slave only); the data transfer rate can reach up to 480Mbps Used for AT command communication, data transmission, GNSS NMEA sentences output, software debugging, firmware upgrade and voice over USB Support USB serial drivers for: Windows 7/8/8.1/10, Linux 2.6/3.x/4.1~4.15, Android 4.x/5.x/6.x/7.x/8.x/9.x, etc.
UART Interface	**Main UART:** Used for AT command communication and data transmission Baud rates reach up to 921600bps, 115200bps by default Support RTS and CTS hardware flow control **Debug UART:** Used for Linux console and log output 115200bps baud rate
SPI Interface [2)]	Provides a duplex, synchronous and serial communication link with the peripheral devices. Dedicated to one-to-one connection, without chip selection.

	1.8V operation voltage with clock rates up to 50MHz.
Rx-diversity	Support LTE/WCDMA Rx-diversity
GNSS Features	Gen8C Lite of Qualcomm Protocol: NMEA 0183
AT Commands	Compliant with 3GPP TS 27.007, 27.005 and enhanced AT commands
Network Indication	NETLIGHT pin for network activity status indication
Antenna Interfaces	Including main antenna interface (ANT_MAIN), Rx-diversity antenna (ANT_DIV) interface and GNSS antenna interface (ANT_GNSS)[1)]
Physical Characteristics	Size: (29.0±0.15)mm × (25.0±0.15)mm × (2.3±0.2)mm Package: LGA Weight: approx. 3.8g
Temperature Range	Operation temperature range: -35°C ~ +75°C [3)] Extended temperature range: -40°C ~ +85°C [4)] Storage temperature range: -40°C ~ +90°C
Firmware Upgrade	USB interface or DFOTA
RoHS	All hardware components are fully compliant with EU RoHS directive

NOTES

1. [1)] GNSS antenna interface is only supported on EG95-NA/-EX/-NAX.
2. [2)] SPI interface is not supported on ThreadX modules.
3. [3)] Within operation temperature range, the module is 3GPP compliant.
4. [4)] Within extended temperature range, the module remains the ability to establish and maintain a voice, SMS, data transmission, emergency call* (emergency call is not supported on ThreadX module), etc. There is no unrecoverable malfunction. There are also no effects on radio spectrum and no harm to radio network. Only one or more parameters like P_{out} might reduce in their value and exceed the specified tolerances. When the temperature returns to normal operation temperature levels, the module will meet 3GPP specifications again.
5. "*" means under development.

2.3. Functional Diagram

The following figure shows a block diagram of EG95 and illustrates the major functional parts.

- Power management
- Baseband
- DDR+NAND flash
- Radio frequency
- Peripheral interfaces

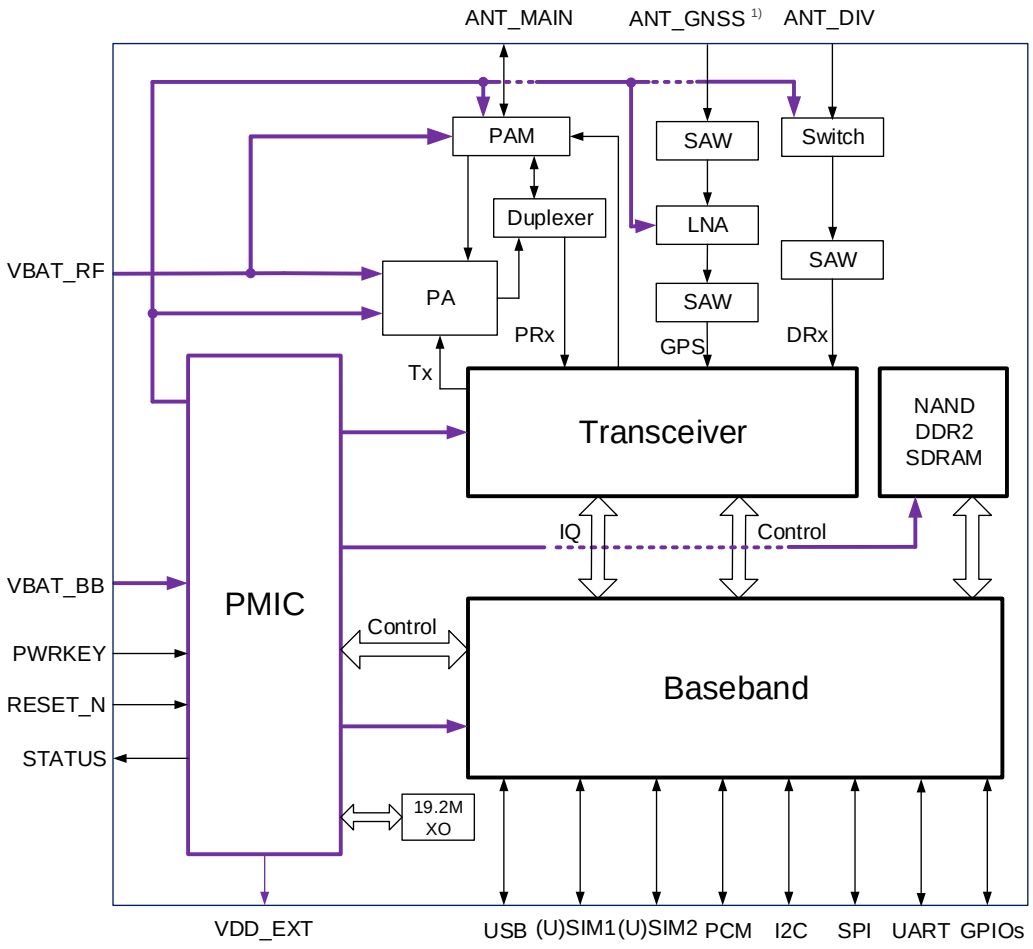

Figure 1: Functional Diagram

NOTE

1) GNSS antenna interface is only supported on EG95-NA/-EX/-NAX.

2.4. Evaluation Board

we provides a complete set of evaluation tools to facilitate the use and testing of EG95 module. The evaluation tool kit includes the evaluation board (UMTS&LTE EVB), USB data cable, earphone, antenna and other peripherals. For more details, please refer to ***document [7]***.

3 Application Interfaces

3.1. General Description

EG95 is equipped with 62-pin 1.1mm pitch SMT pads and 44-pin ground/reserved pads that can be connected to customers' cellular application platforms. Sub-interfaces included in these pads are described in detail in the following chapters:

- Power supply
- (U)SIM interfaces
- USB interface
- UART interfaces
- PCM and I2C interfaces
- SPI interface [1)]
- Status indication
- USB_BOOT interface

NOTE

[1)] SPI interface is not supported on ThreadX modules.

3.2. Pin Assignment

The following figure shows the pin assignment of EG95 module.

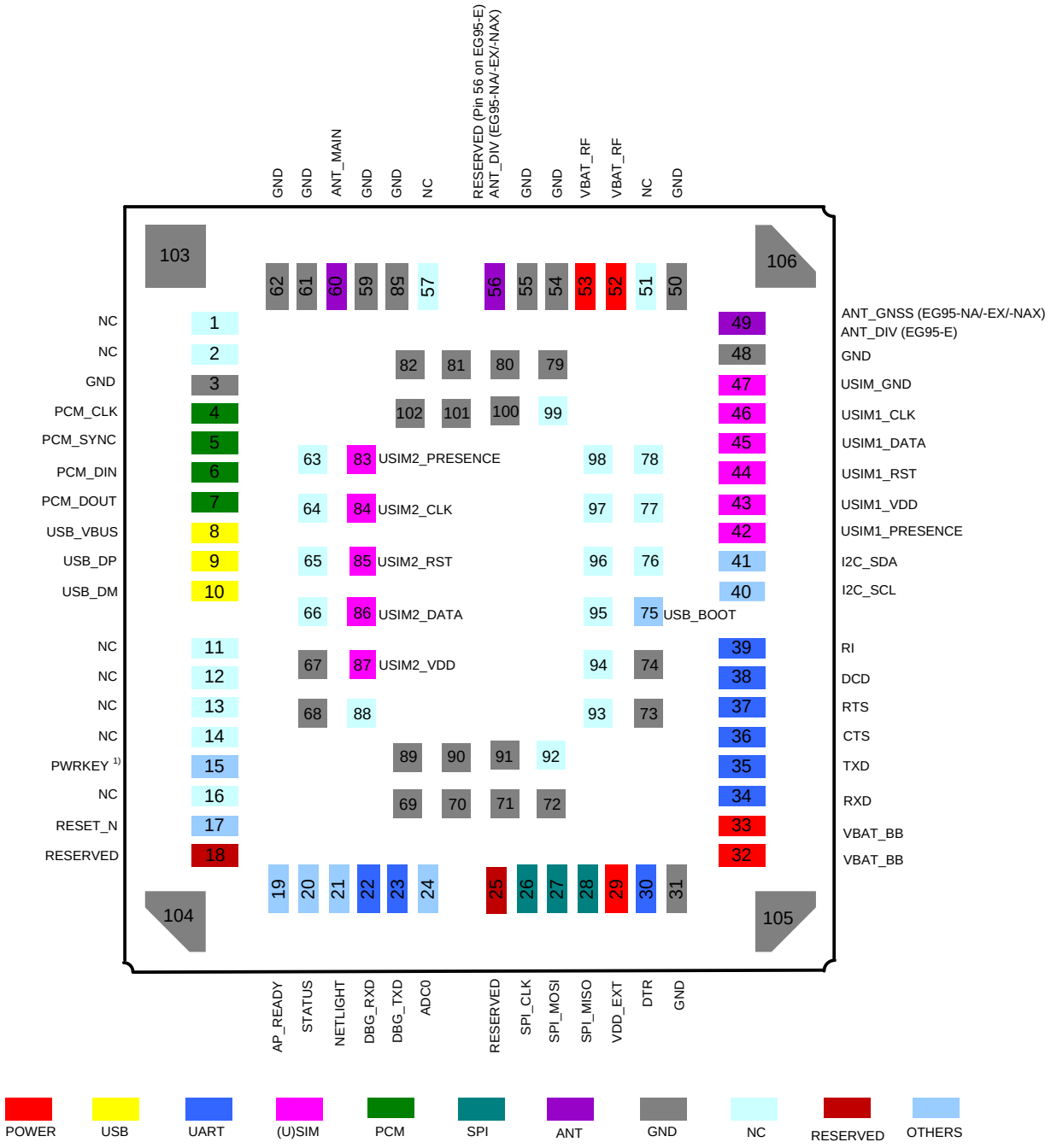

Figure 2: Pin Assignment (Top View)

NOTES

1. [1)] PWRKEY output voltage is 0.8V because of the diode drop in the Qualcomm chipset.
2. Keep all RESERVED pins and unused pins unconnected.
3. GND pads should be connected to ground in the design.
4. Please note that the definition of pin 49 and 56 are different among EG95-E and EG95-NA/-EX/-NAX. For more details, please refer to ***Table 4***.

3.3. Pin Description

The following tables show the pin definition and description of EG95.

Table 3: IO Parameters Definition

Type	Description
AI	Analog Input
AO	Analog Output
DI	Digital Input
DO	Digital Output
IO	Bidirectional
OD	Open Drain
PI	Power Input
PO	Power Output

Table 4: Pin Description

Power Supply					
Pin Name	**Pin No.**	**I/O**	**Description**	**DC Characteristics**	**Comment**
VBAT_BB	32, 33	PI	Power supply for module's baseband part	Vmax=4.3V Vmin=3.3V Vnorm=3.8V	It must be provided with sufficient current up to 0.8A.
VBAT_RF	52, 53	PI	Power supply for	Vmax=4.3V	It must be provided with

			module's RF part	Vmin=3.3V Vnorm=3.8V	sufficient current up to 1.8A in a burst transmission.
VDD_EXT	29	PO	Provide 1.8V for external circuit	Vnorm=1.8V $I_O$max=50mA	Power supply for external GPIO's pull up circuits. If unused, keep it open.
GND	3, 31, 48, 50, 54, 55, 58, 59, 61, 62, 67~74, 79~82, 89~91, 100~106		Ground		
Power-on/off					
Pin Name	**Pin No.**	**I/O**	**Description**	**DC Characteristics**	**Comment**
PWRKEY	15	DI	Turn on/off the module	V_H=0.8V	The output voltage is 0.8V because of the diode drop in the Qualcomm chipset.
RESET_N	17	DI	Reset signal of the module	V_{IH}max=2.1V V_{IH}min=1.3V V_{IL}max=0.5V	Pull-up to 1.8V internally. Active low. If unused, keep it open.
Status Indication					
Pin Name	**Pin No.**	**I/O**	**Description**	**DC Characteristics**	**Comment**
STATUS	20	DO	Indicate the module's operation status	V_{OH}min=1.35V V_{OL}max=0.45V	1.8V power domain. If unused, keep it open.
NETLIGHT	21	DO	Indicate the module's network activity status	V_{OH}min=1.35V V_{OL}max=0.45V	1.8V power domain. If unused, keep it open.
USB Interface					
Pin Name	**Pin No.**	**I/O**	**Description**	**DC Characteristics**	**Comment**
USB_VBUS	8	PI	USB connection detection	Vmax=5.25V Vmin=3.0V Vnorm=5.0V	Typical: 5.0V If unused, keep it open.

USB_DP	9	IO	USB differential data bus (+)	Compliant with USB 2.0 standard specification.	Require differential impedance of 90Ω.
USB_DM	10	IO	USB differential data bus (-)	Compliant with USB 2.0 standard specification.	Require differential impedance of 90Ω.
(U)SIM Interfaces					
Pin Name	**Pin No.**	**I/O**	**Description**	**DC Characteristics**	**Comment**
USIM_GND	47		Specified ground for (U)SIM card		Connect to ground of (U)SIM card connector.
USIM1_VDD	43	PO	Power supply for (U)SIM card	**For 1.8V (U)SIM:** Vmax=1.9V Vmin=1.7V **For 3.0V (U)SIM:** Vmax=3.05V Vmin=2.7V $I_O$max=50mA	Either 1.8V or 3.0V is supported by the module automatically.
USIM1_DATA	45	IO	Data signal of (U)SIM card	**For 1.8V (U)SIM:** V_{IL}max=0.6V V_{IH}min=1.2V V_{OL}max=0.45V V_{OH}min=1.35V **For 3.0V (U)SIM:** V_{IL}max=1.0V V_{IH}min=1.95V V_{OL}max=0.45V V_{OH}min=2.55V	
USIM1_CLK	46	DO	Clock signal of (U)SIM card	**For 1.8V (U)SIM:** V_{OL}max=0.45V V_{OH}min=1.35V **For 3.0V (U)SIM:** V_{OL}max=0.45V V_{OH}min=2.55V	

USIM1_RST	44	DO	Reset signal of (U)SIM card	**For 1.8V (U)SIM:** V_{OL}max=0.45V V_{OH}min=1.35V **For 3.0V (U)SIM:** V_{OL}max=0.45V V_{OH}min=2.55V	
USIM1_ PRESENCE	42	DI	(U)SIM card insertion detection	V_{IL}min=-0.3V V_{IL}max=0.6V V_{IH}min=1.2V V_{IH}max=2.0V	1.8V power domain. If unused, keep it open.
USIM2_VDD	87	PO	Power supply for (U)SIM card	**For 1.8V (U)SIM:** Vmax=1.9V Vmin=1.7V **For 3.0V (U)SIM:** Vmax=3.05V Vmin=2.7V $I_O$max=50mA	Either 1.8V or 3.0V is supported by the module automatically.
USIM2_DATA	86	IO	Data signal of (U)SIM card	**For 1.8V (U)SIM:** V_{IL}max=0.6V V_{IH}min=1.2V V_{OL}max=0.45V V_{OH}min=1.35V **For 3.0V (U)SIM:** V_{IL}max=1.0V V_{IH}min=1.95V V_{OL}max=0.45V V_{OH}min=2.55V	
USIM2_CLK	84	DO	Clock signal of (U)SIM card	**For 1.8V (U)SIM:** V_{OL}max=0.45V V_{OH}min=1.35V **For 3.0V (U)SIM:** V_{OL}max=0.45V V_{OH}min=2.55V	
USIM2_RST	85	DO	Reset signal of (U)SIM card	**For 1.8V (U)SIM:** V_{OL}max=0.45V V_{OH}min=1.35V **For 3.0V (U)SIM:** V_{OL}max=0.45V V_{OH}min=2.55V	

USIM2_ PRESENCE	83	DI	(U)SIM card insertion detection	V_{IL}min=-0.3V V_{IL}max=0.6V V_{IH}min=1.2V V_{IH}max=2.0V	1.8V power domain. If unused, keep it open.
Main UART Interface					
Pin Name	**Pin No.**	**I/O**	**Description**	**DC Characteristics**	**Comment**
RI	39	DO	Ring indicator	V_{OL}max=0.45V V_{OH}min=1.35V	1.8V power domain. If unused, keep it open.
DCD	38	DO	Data carrier detection	V_{OL}max=0.45V V_{OH}min=1.35V	1.8V power domain. If unused, keep it open.
CTS	36	DO	Clear to send	V_{OL}max=0.45V V_{OH}min=1.35V	1.8V power domain. If unused, keep it open.
RTS	37	DI	Request to send	V_{IL}min=-0.3V V_{IL}max=0.6V V_{IH}min=1.2V V_{IH}max=2.0V	1.8V power domain. If unused, keep it open.
DTR	30	DI	Data terminal ready. Sleep mode control.	V_{IL}min=-0.3V V_{IL}max=0.6V V_{IH}min=1.2V V_{IH}max=2.0V	1.8V power domain. Pull-up by default. Low level wakes up the module. If unused, keep it open.
TXD	35	DO	Transmit data	V_{OL}max=0.45V V_{OH}min=1.35V	1.8V power domain. If unused, keep it open.
RXD	34	DI	Receive data	V_{IL}min=-0.3V V_{IL}max=0.6V V_{IH}min=1.2V V_{IH}max=2.0V	1.8V power domain. If unused, keep it open.
Debug UART Interface					
Pin Name	**Pin No.**	**I/O**	**Description**	**DC Characteristics**	**Comment**
DBG_TXD	23	DO	Transmit data	V_{OL}max=0.45V V_{OH}min=1.35V	1.8V power domain. If unused, keep it open.
DBG_RXD	22	DI	Receive data	V_{IL}min=-0.3V V_{IL}max=0.6V V_{IH}min=1.2V	1.8V power domain. If unused, keep it open.

				V_{IH}max=2.0V	
PCM Interface					
Pin Name	**Pin No.**	**I/O**	**Description**	**DC Characteristics**	**Comment**
PCM_DIN	6	DI	PCM data input	V_{IL}min=-0.3V V_{IL}max=0.6V V_{IH}min=1.2V V_{IH}max=2.0V	1.8V power domain. If unused, keep it open.
PCM_DOUT	7	DO	PCM data output	V_{OL}max=0.45V V_{OH}min=1.35V	1.8V power domain. If unused, keep it open.
PCM_SYNC	5	IO	PCM data frame synchronization signal	V_{OL}max=0.45V V_{OH}min=1.35V V_{IL}min=-0.3V V_{IL}max=0.6V V_{IH}min=1.2V V_{IH}max=2.0V	1.8V power domain. In master mode, it is an output signal. In slave mode, it is an input signal. If unused, keep it open.
PCM_CLK	4	IO	PCM clock	V_{OL}max=0.45V V_{OH}min=1.35V V_{IL}min=-0.3V V_{IL}max=0.6V V_{IH}min=1.2V V_{IH}max=2.0V	1.8V power domain. In master mode, it is an output signal. In slave mode, it is an input signal. If unused, keep it open.
I2C Interface					
Pin Name	**Pin No.**	**I/O**	**Description**	**DC Characteristics**	**Comment**
I2C_SCL	40	OD	I2C serial clock. Used for external codec		An external pull-up resistor is required. 1.8V only. If unused, keep it open.
I2C_SDA	41	OD	I2C serial data. Used for external codec		An external pull-up resistor is required. 1.8V only. If unused, keep it open.
ADC Interface					
Pin Name	**Pin No.**	**I/O**	**Description**	**DC Characteristics**	**Comment**

ADC0	24	AI	General purpose analog to digital converter	Voltage range: 0.3V to VBAT_BB	If unused, keep it open.
SPI Interface [1)]					
Pin Name	**Pin No.**	**I/O**	**Description**	**DC Characteristics**	**Comment**
SPI_CLK	26	DO	Clock signal of SPI interface	V_{OL}max=0.45V V_{OH}min=1.35V	1.8V power domain. If unused, keep it open.
SPI_MOSI	27	DO	Master output slave input of SPI interface	V_{OL}max=0.45V V_{OH}min=1.35V	1.8V power domain. If unused, keep it open.
SPI_MISO	28	DI	Master input slave output of SPI interface	V_{IL}min=-0.3V V_{IL}max=0.6V V_{IH}min=1.2V V_{IH}max=2.0V	1.8V power domain. If unused, keep it open.
RF Interfaces					
Pin Name	**Pin No.**	**I/O**	**Description**	**DC Characteristics**	**Comment**
ANT_GNSS	49 (EG95-NA/-EX/-NAX)	AI	GNSS antenna pad		50Ω impedance. If unused, keep it open. The pin is defined as ANT_DIV on EG95-E.
ANT_DIV	49 (EG95-E) 56 (EG95-NA/-EX/-NAX)	AI	Receive diversity antenna pad		50Ω impedance. If unused, keep it open. Pin 56 is reserved on EG95-E.
ANT_MAIN	60	IO	Main antenna pad		50Ω impedance.
Other Pins					
Pin Name	**Pin No.**	**I/O**	**Description**	**DC Characteristics**	**Comment**
AP_READY	19	DI	Application processor sleep state detection	V_{IL}min=-0.3V V_{IL}max=0.6V V_{IH}min=1.2V V_{IH}max=2.0V	1.8V power domain. If unused, keep it open.

USB_BOOT	75	DI	Force the module to enter emergency download mode	V_{IL}min=-0.3V V_{IL}max=0.6V V_{IH}min=1.2V V_{IH}max=2.0V	1.8V power domain. It is recommended to reserve the test points.
RESERVED Pins					
Pin Name	**Pin No.**	**I/O**	**Description**	**DC Characteristics**	**Comment**
NC	1,2, 11~14, 16, 51, 57, 63~66, 76~78, 88, 92~99		NC		Keep these pins unconnected.
RESERVED	18, 25, 56		Reserved		Keep these pins unconnected. Pin 56 is only reserved on EG95-E.

NOTES

1. [1)] SPI interface is not supported on ThreadX modules.
2. Keep all RESERVED pins and unused pins unconnected.

3.4. Operating Modes

The table below briefly summarizes the various operating modes referred in the following chapters.

Table 5: Overview of Operating Modes

Mode	Details	
Normal Operation	Idle	Software is active. The module has registered on network, and it is ready to send and receive data.
	Talk/Data	Network connection is ongoing. In this mode, the power consumption is decided by network setting and data transfer rate.
Minimum Functionality Mode	**AT+CFUN** command can set the module to a minimum functionality mode without removing the power supply. In this case, both RF function and (U)SIM card will be invalid.	
Airplane Mode	**AT+CFUN** command or W_DISABLE# pin can set the module to enter airplane mode. In this case, RF function will be invalid.	

Sleep Mode	In this mode, the current consumption of the module will be reduced to the minimal level. During this mode, the module can still receive paging message, SMS, voice call and TCP/UDP data from the network normally.
Power Down Mode	In this mode, the power management unit shuts down the power supply. Software is not active. The serial interface is not accessible. Operating voltage (connected to VBAT_RF and VBAT_BB) remains applied.

3.5. Power Saving

3.5.1. Sleep Mode

EG95 is able to reduce its current consumption to a minimum value during the sleep mode. The following sub-chapters describe the power saving procedures of EG95 module.

3.5.1.1. UART Application

If the host communicates with the module via UART interface, the following preconditions can let the module enter sleep mode.

- Execute **AT+QSCLK=1** command to enable sleep mode.
- Drive DTR to high level.

The following figure shows the connection between the module and the host.

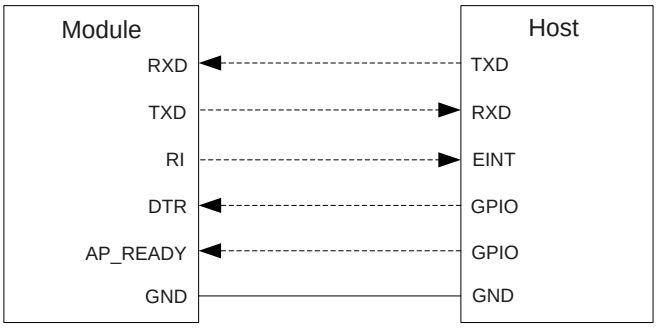

Figure 3: Sleep Mode Application via UART

Driving the host DTR to low level will wake up the module.

- When EG95 has a URC to report, RI signal will wake up the host. Please refer to ***Chapter 3.17*** for details about RI behavior.
- AP_READY will detect the sleep state of host (can be configured to high level or low level detection). Please refer to **AT+QCFG="apready"** for details.

3.5.1.2. USB Application with USB Remote Wakeup Function

If the host supports USB suspend/resume and remote wakeup functions, the following three preconditions must be met to let the module enter sleep mode.

- Execute **AT+QSCLK=1** command to enable sleep mode.
- Ensure the DTR is held at high level or keep it open.
- The host's USB bus, which is connected with the module's USB interface, enters suspend state.

The following figure shows the connection between the module and the host.

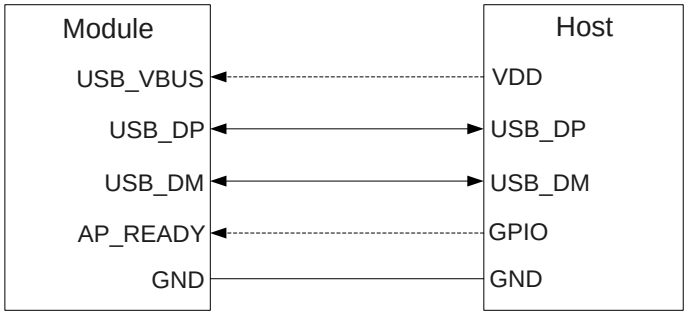

Figure 4: Sleep Mode Application with USB Remote Wakeup

- Sending data to EG95 through USB will wake up the module.
- When EG95 has a URC to report, the module will send remote wakeup signals via USB bus so as to wake up the host.

3.5.1.3. USB Application with USB Suspend/Resume and RI Function

If the host supports USB suspend/resume, but does not support remote wake-up function, the RI signal is needed to wake up the host.

There are three preconditions to let the module enter sleep mode.

- Execute **AT+QSCLK=1** command to enable sleep mode.
- Ensure the DTR is held at high level or keep it open.
- The host's USB bus, which is connected with the module's USB interface, enters suspended state.

The following figure shows the connection between the module and the host.

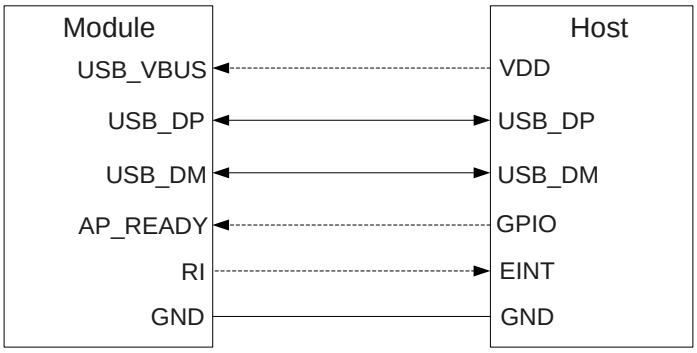

Figure 5: Sleep Mode Application with RI

- Sending data to EG95 through USB will wake up the module.
- When module has a URC to report, RI signal will wake up the host.

3.5.1.4. USB Application without USB Suspend Function

If the host does not support USB suspend function, USB_VBUS should be disconnected with an external control circuit to let the module enter sleep mode.

- Execute **AT+QSCLK=1** command to enable the sleep mode.
- Ensure the DTR is held at high level or keep it open.
- Disconnect USB_VBUS.

The following figure shows the connection between the module and the host.

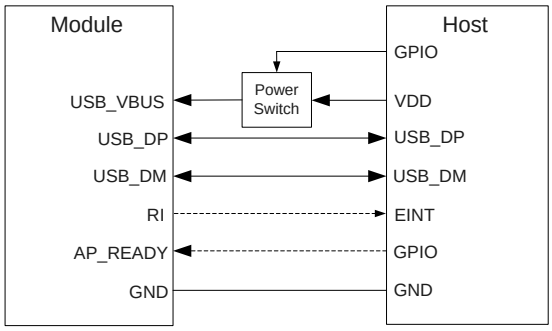

Figure 6: Sleep Mode Application without Suspend Function

Switching on the power switch to supply power to USB_VBUS will wake up the module.

NOTE

Please pay attention to the level match shown in dotted line between the module and the host. Please refer to ***document [1]*** for more details about EG95 power management application.

3.5.2. Airplane Mode

When the module enters airplane mode, the RF function does not work, and all AT commands correlative with RF function will be inaccessible. This mode can be set via the following ways.

Hardware:

The W_DISABLE# pin is pulled up by default. Driving it to low level will let the module enter airplane mode.

Software:

AT+CFUN command provides the choice of the functionality level through setting **<fun>** as 0, 1 or 4.

- **AT+CFUN=0:** Minimum functionality mode. Both (U)SIM and RF functions are disabled.
- **AT+CFUN=1:** Full functionality mode (by default).
- **AT+CFUN=4:** Airplane mode. RF function is disabled.

NOTES

1. Airplane mode control via W_DISABLE# is disabled in firmware by default. It can be enabled by **AT+QCFG="airplanecontrol"** command and this command is under development.
2. The execution of **AT+CFUN** command will not affect GNSS function.

3.6. Power Supply

3.6.1. Power Supply Pins

EG95 provides four VBAT pins for connection with an external power supply. There are two separate voltage domains for VBAT.

- Two VBAT_RF pins for module's RF part.
- Two VBAT_BB pins for module's baseband part.

The following table shows the details of VBAT pins and ground pins.

Table 6: Pin Definition of VBAT and GND

Pin Name	Pin No.	Description	Min.	Typ.	Max.	Unit
VBAT_RF	52, 53	Power supply for module's RF part.	3.3	3.8	4.3	V
VBAT_BB	32, 33	Power supply for module's baseband part.	3.3	3.8	4.3	V
GND	3, 31, 48, 50, 54, 55, 58, 59, 61, 62, 67~74, 79~82, 89~91, 100~106	Ground	-	0	-	V

3.6.2. Decrease Voltage Drop

The power supply range of the module is from 3.3V to 4.3V. Please make sure that the input voltage will never drop below 3.3V. The following figure shows the voltage drop during burst transmission in 2G network. The voltage drop will be less in 3G and 4G networks.

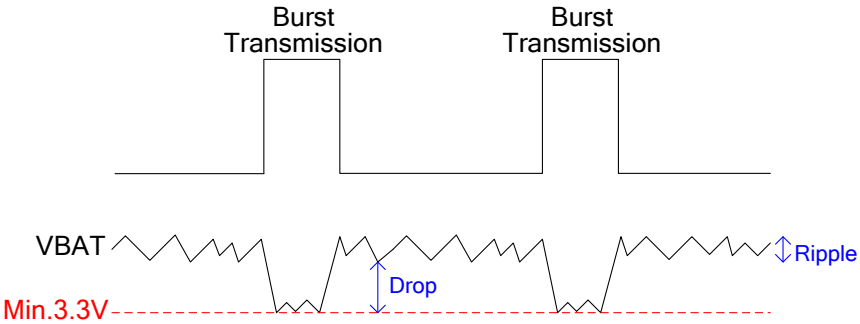

Figure 7: Power Supply Limits during Burst Transmission

To decrease voltage drop, a bypass capacitor of about 100μF with low ESR (ESR=0.7Ω) should be used, and a multi-layer ceramic chip (MLCC) capacitor array should also be reserved due to its ultra-low ESR. It is recommended to use three ceramic capacitors (100nF, 33pF, 10pF) for composing the MLCC array, and place these capacitors close to VBAT_BB/VBAT_RF pins. The main power supply from an external application has to be a single voltage source and can be expanded to two sub paths with star structure. The width of VBAT_BB trace should be no less than 1mm, and the width of VBAT_RF trace should be no less than 2mm. In principle, the longer the VBAT trace is, the wider it will be.

In addition, in order to avoid the damage caused by electric surge and ESD, it is suggested that a TVS diode with low reverse stand-off voltage V_{RWM}, low clamping voltage V_C and high reverse peak pulse current I_{PP} should be used. The following figure shows the star structure of the power supply.

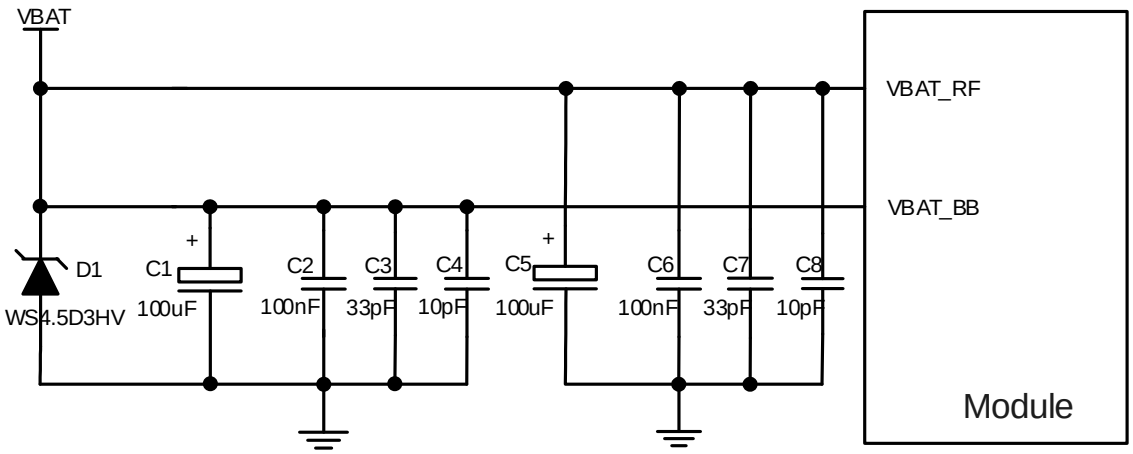

Figure 8: Star Structure of Power Supply

3.6.3. Reference Design for Power Supply

Power design for the module is very important, as the performance of the module largely depends on the power source. The power supply should be able to provide sufficient current up to 2A at least. If the voltage drop between the input and output is not too high, it is suggested that an LDO should be used to supply power for the module. If there is a big voltage difference between the input source and the desired output (VBAT), a buck converter is preferred to be used as the power supply.

The following figure shows a reference design for +5V input power source. The typical output of the power supply is about 3.8V and the maximum load current is 3.0A.

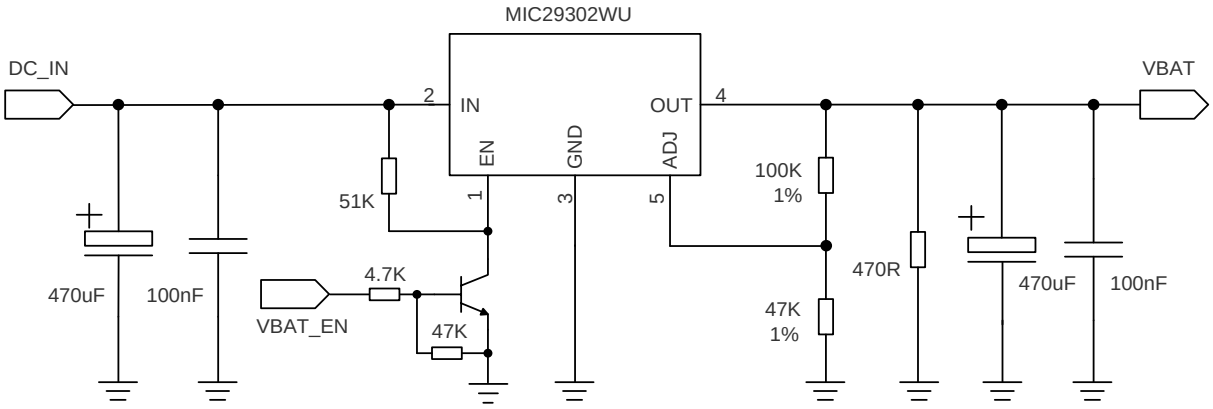

Figure 9: Reference Circuit of Power Supply

3.6.4. Monitor the Power Supply

AT+CBC command can be used to monitor the VBAT_BB voltage value. For more details, please refer to ***document [2]***.

3.7. Power-on/off Scenarios

3.7.1. Turn on Module Using the PWRKEY

The following table shows the pin definition of PWRKEY.

Table 7: Pin Definition of PWRKEY

Pin Name	Pin No.	Description	DC Characteristics	Comment
PWRKEY	15	Turn on/off the module	V_H=0.8V	The output voltage is 0.8V because of the diode drop in the Qualcomm chipset.

When EG95 is in power down mode, it can be turned on to normal mode by driving the PWRKEY pin to a low level for at least 500ms. It is recommended to use an open drain/collector driver to control the PWRKEY. After STATUS pin outputting a high level, PWRKEY pin can be released. A simple reference circuit is illustrated in the following figure.

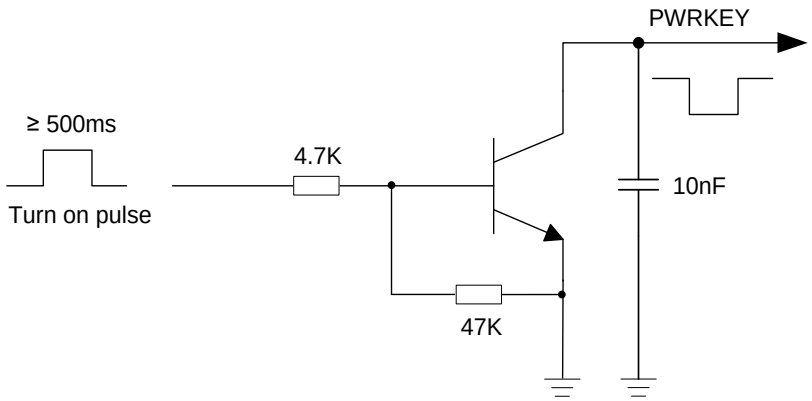

Figure 10: Turn on the Module Using Driving Circuit

Another way to control the PWRKEY is using a button directly. When pressing the key, electrostatic strike may generate from the finger. Therefore, a TVS component is indispensable to be placed nearby the button for ESD protection. A reference circuit is shown in the following figure.

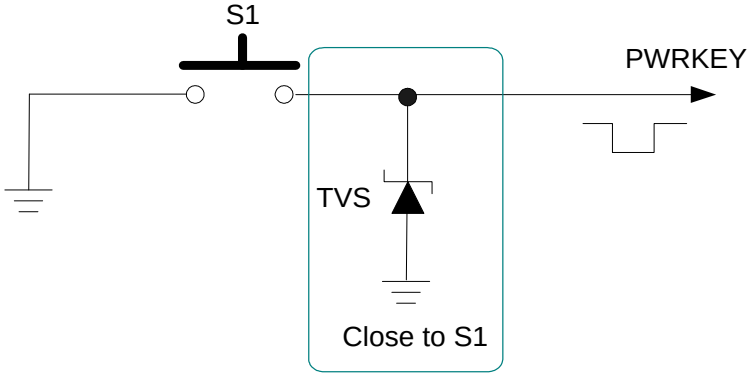

Figure 11: Turn on the Module Using Button

The power-on scenario is illustrated in the following figure.

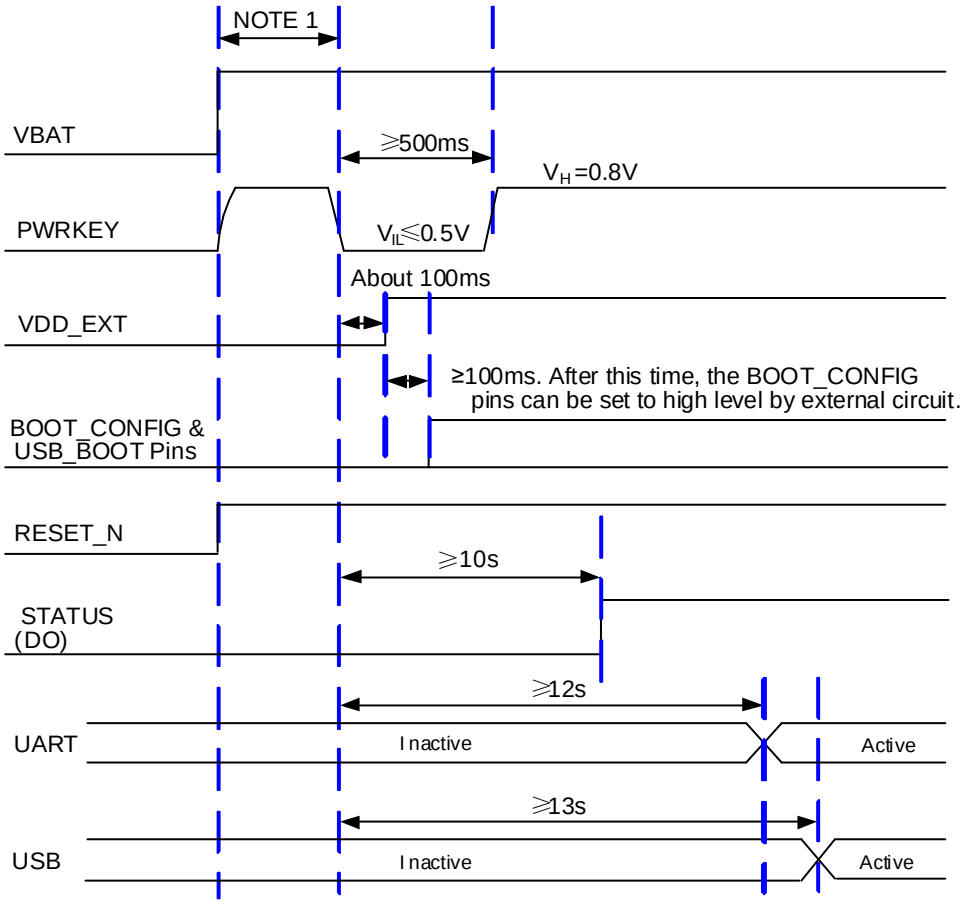

Figure 12: Timing of Turning on Module

NOTES

1. Please make sure that VBAT is stable before pulling down PWRKEY pin. The time between them is no less than 30ms.
2. PWRKEY can be pulled down directly to GND with a recommended 10KΩ resistor if module needs to be powered on automatically and shutdown is not needed.

3.7.2. Turn off Module

Either of the following methods can be used to turn off the module:

- Normal power-off procedure: Turn off the module using the PWRKEY pin.
- Normal power-off procedure: Turn off the module using **AT+QPOWD** command.

3.7.2.1. Turn off Module Using the PWRKEY Pin

Driving the PWRKEY pin to a low level voltage for at least 650ms, the module will execute power-off procedure after the PWRKEY is released. The power-off scenario is illustrated in the following figure.

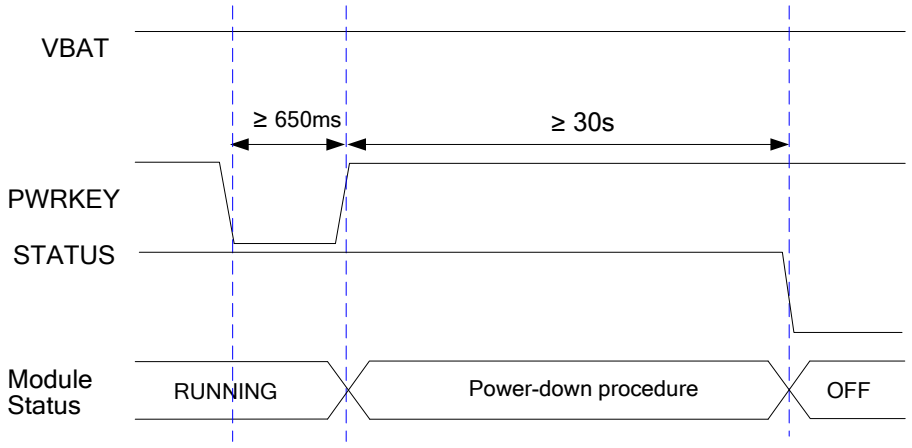

Figure 13: Timing of Turning off Module

3.7.2.2. Turn off Module Using AT Command

It is also a safe way to use **AT+QPOWD** command to turn off the module, which is similar to turning off the module via PWRKEY pin.

Please refer to ***document [2]*** for details about the **AT+QPOWD** command.

NOTES

1. In order to avoid damaging internal flash, please do not switch off the power supply when the module works normally. Only after the module is shut down by PWRKEY or AT command, the power supply can be cut off.
2. When turning off module with AT command, please keep PWRKEY at high level after the execution of power-off command. Otherwise the module will be turned on again after successful turn-off.

3.8. Reset the Module

The RESET_N pin can be used to reset the module. The module can be reset by driving RESET_N to a low level voltage for 150ms ~ 460ms.

Table 8: Pin Definition of RESET_N

Pin Name	Pin No.	Description	DC Characteristics	Comment
RESET_N	17	Reset the module	V_{IH}max=2.1V V_{IH}min=1.3V V_{IL}max=0.5V	

The recommended circuit is similar to the PWRKEY control circuit. An open drain/collector driver or button can be used to control the RESET_N.

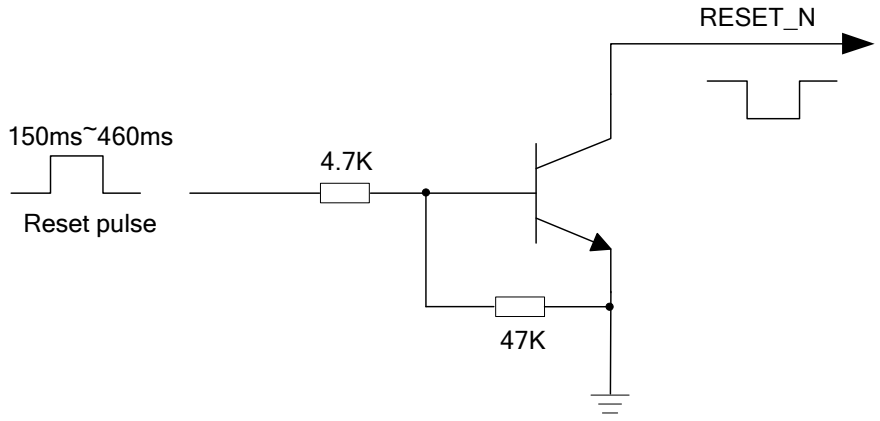

Figure 14: Reference Circuit of RESET_N by Using Driving Circuit

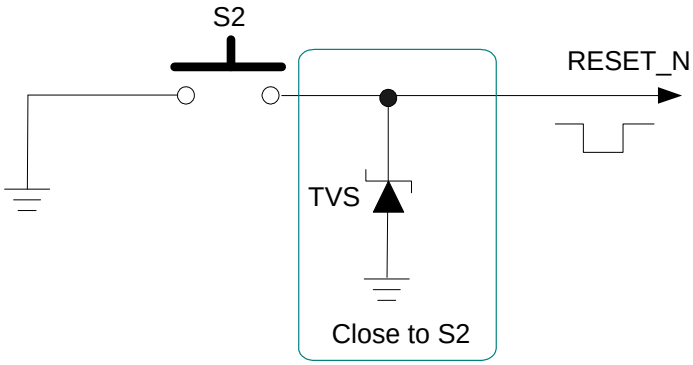

Figure 15: Reference Circuit of RESET_N by Using Button

The reset scenario is illustrated in the following figure.

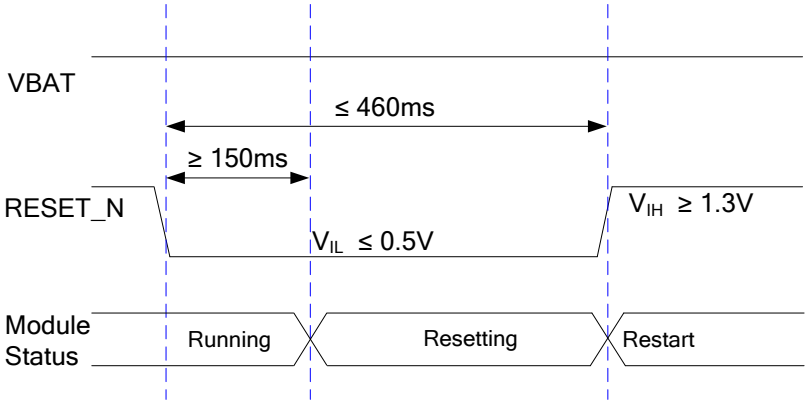

Figure 16: Timing of Resetting Module

NOTES

1. Use RESET_N only when turning off the module by **AT+QPOWD** command and PWRKEY pin failed.
2. Ensure that there is no large capacitance on PWRKEY and RESET_N pins.

3.9. (U)SIM Interfaces

EG95 provides two (U)SIM interfaces, and only one (U)SIM card can work at a time. The (U)SIM 1 and (U)SIM 2 cards can be switched by **AT+QDSIM** command. For more details, please refer to ***document [2]***.

The (U)SIM interfaces circuitry meet ETSI and IMT-2000 requirements. Both 1.8V and 3.0V (U)SIM cards are supported.

Table 9: Pin Definition of (U)SIM Interfaces

Pin Name	Pin No.	I/O	Description	Comment
USIM1_VDD	43	PO	Power supply for (U)SIM1 card	Either 1.8V or 3.0V is supported by the module automatically.
USIM1_DATA	45	IO	Data signal of (U)SIM1 card	
USIM1_CLK	46	DO	Clock signal of (U)SIM1 card	
USIM1_RST	44	DO	Reset signal of (U)SIM1 card	
USIM1_ PRESENCE	42	DI	(U)SIM1 card insertion detection	
USIM_GND	47		Specified ground for (U)SIM card	
USIM2_VDD	87	PO	Power supply for (U)SIM2 card	Either 1.8V or 3.0V is supported by the module automatically.
USIM2_DATA	86	IO	Data signal of (U)SIM2 card	
USIM2_CLK	84	DO	Clock signal of (U)SIM2 card	
USIM2_RST	85	DO	Reset signal of (U)SIM2 card	
USIM2_ PRESENCE	83	DI	(U)SIM2 card insertion detection	

EG95 supports (U)SIM card hot-plug via USIM_PRESENCE (USIM1_PRESENCE/USIM2_PRESENCE) pin. The function supports low level and high level detection, and is disabled by default. Please refer to ***document [2]*** about **AT+QSIMDET** command for details.

The following figure shows a reference design for (U)SIM interface with an 8-pin (U)SIM card connector.

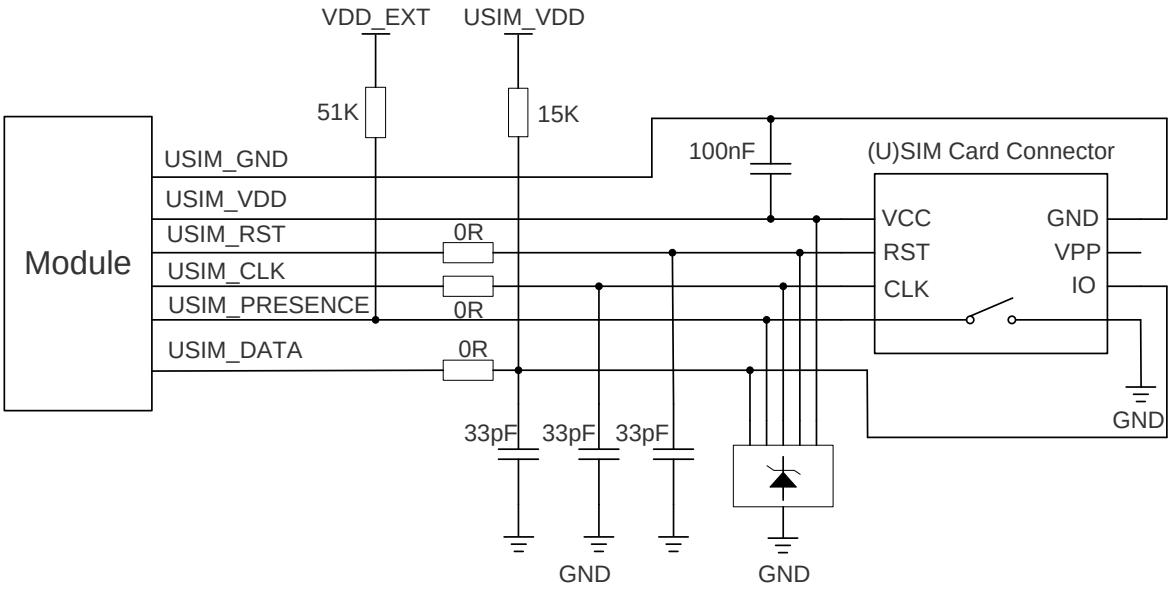

Figure 17: Reference Circuit of (U)SIM Interface with an 8-pin (U)SIM Card Connector

If (U)SIM card detection function is not needed, please keep USIM_PRESENCE unconnected. A reference circuit of (U)SIM interface with a 6-pin (U)SIM card connector is illustrated in the following figure.

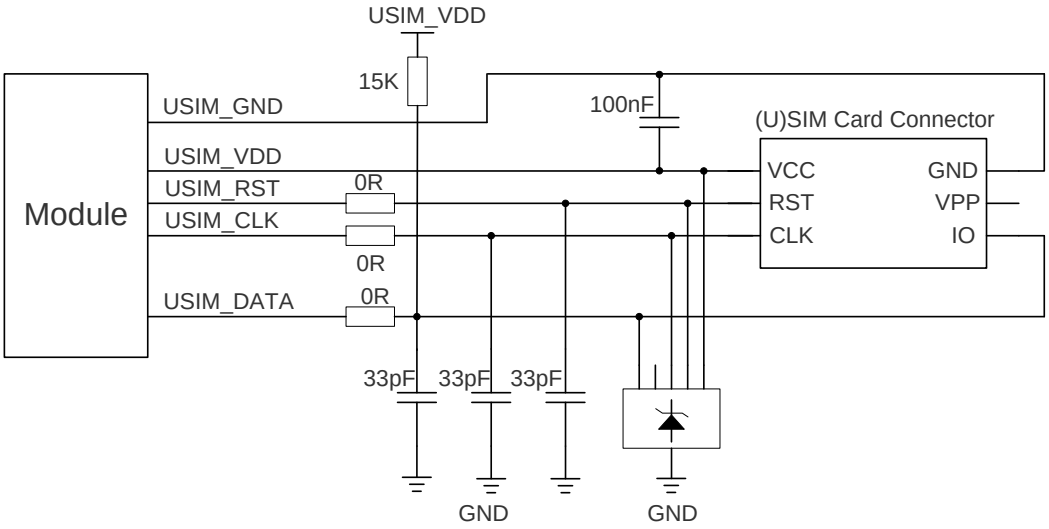

Figure 18: Reference Circuit of (U)SIM Interface with a 6-pin (U)SIM Card Connector

In order to enhance the reliability and availability of the (U)SIM cards in customers' applications, please follow the criteria below in the (U)SIM circuit design:

- Keep placement of (U)SIM card connector to the module as close as possible. Keep the trace length as less than 200mm as possible.
- Keep (U)SIM card signals away from RF and VBAT traces.

- Make sure the bypass capacitor between USIM_VDD and USIM_GND less than 1uF, and place it as close to (U)SIM card connector as possible. If the ground is complete on customers' PCB, USIM_GND can be connected to PCB ground directly.
- To avoid cross-talk between USIM_DATA and USIM_CLK, keep them away from each other and shield them with surrounded ground.
- In order to offer good ESD protection, it is recommended to add a TVS diode array whose parasitic capacitance should not be more than 15pF. The 0Ω resistors should be added in series between the module and the (U)SIM card to facilitate debugging. The 33pF capacitors are used for filtering interference of EGSM900. Please note that the (U)SIM peripheral circuit should be close to the (U)SIM card connector.
- The pull-up resistor on USIM_DATA line can improve anti-jamming capability when long layout trace and sensitive occasion are applied, and should be placed close to the (U)SIM card connector.

3.10. USB Interface

EG95 contains one integrated Universal Serial Bus (USB) interface which complies with the USB 2.0 specification and supports high-speed (480Mbps) and full-speed (12Mbps) modes. The USB interface acts as slave only, and is used for AT command communication, data transmission, GNSS NMEA sentences output, software debugging, firmware upgrade and voice over USB. The following table shows the pin definition of USB interface.

Table 10: Pin Definition of USB Interface

Pin Name	Pin No.	I/O	Description	Comment
USB_DP	9	IO	USB differential data bus (+)	Require differential impedance of 90Ω.
USB_DM	10	IO	USB differential data bus (-)	Require differential impedance of 90Ω.
USB_VBUS	8	PI	USB connection detection	Typical: 5.0V
GND	3		Ground	

For more details about USB 2.0 specifications, please visit http://www.usb.org/home.

The USB interface is recommended to be reserved for firmware upgrade in customers' design. The following figure shows a reference circuit of USB interface.

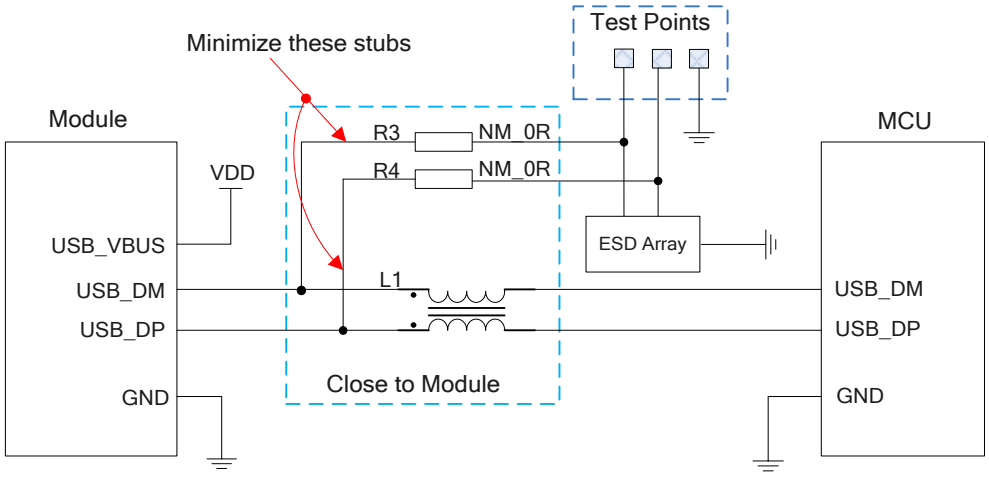

Figure 19: Reference Circuit of USB Interface

A common mode choke L1 is recommended to be added in series between the module and customer's MCU in order to suppress EMI spurious transmission. Meanwhile, the 0Ω resistors (R3 and R4) should be added in series between the module and the test points so as to facilitate debugging, and the resistors are not mounted by default. In order to ensure the integrity of USB data line signal, L1/R3/R4 components must be placed close to the module, and also these resistors should be placed close to each other. The extra stubs of trace must be as short as possible.

The following principles should be complied with when design the USB interface, so as to meet USB 2.0 specification.

- It is important to route the USB signal traces as differential pairs with total grounding. The impedance of USB differential trace is 90Ω.
- Do not route signal traces under crystals, oscillators, magnetic devices and RF signal traces. It is important to route the USB differential traces in inner-layer with ground shielding on not only upper and lower layers but also right and left sides.
- Pay attention to the influence of junction capacitance of ESD protection components on USB data lines. Typically, the capacitance value should be less than 2pF.
- Keep the ESD protection components to the USB connector as close as possible.

3.11. UART Interfaces

The module provides two UART interfaces: the main UART interface and the debug UART interface. The following shows their features.

- The main UART interface supports 9600bps, 19200bps, 38400bps, 57600bps, 115200bps, 230400bps, 460800bps, 921600bps and 3000000bps baud rates, and the default is 115200bps. It supports RTS and CTS hardware flow control, and is used for AT command communication only.

- The debug UART interface supports 115200bps baud rate. It is used for Linux console and log output.

The following tables show the pin definition of the two UART interfaces.

Table 11: Pin Definition of Main UART Interfaces

Pin Name	Pin No.	I/O	Description	Comment
RI	39	DO	Ring indicator	1.8V power domain
DCD	38	DO	Data carrier detection	
CTS	36	DO	Clear to send	
RTS	37	DI	Request to send	
DTR	30	DI	Sleep mode control	
TXD	35	DO	Transmit data	
RXD	34	DI	Receive data	

Table 12: Pin Definition of Debug UART Interface

Pin Name	Pin No.	I/O	Description	Comment
DBG_TXD	23	DO	Transmit data	1.8V power domain
DBG_RXD	22	DI	Receive data	1.8V power domain

The logic levels are described in the following table.

Table 13: Logic Levels of Digital I/O

Parameter	Min.	Max.	Unit
V_{IL}	-0.3	0.6	V
V_{IH}	1.2	2.0	V
V_{OL}	0	0.45	V
V_{OH}	1.35	1.8	V

The module provides 1.8V UART interfaces. A level translator should be used if customers' application is equipped with a 3.3V UART interface. A level translator TXS0108EPWR provided by *Texas Instruments* is recommended. The following figure shows a reference design.

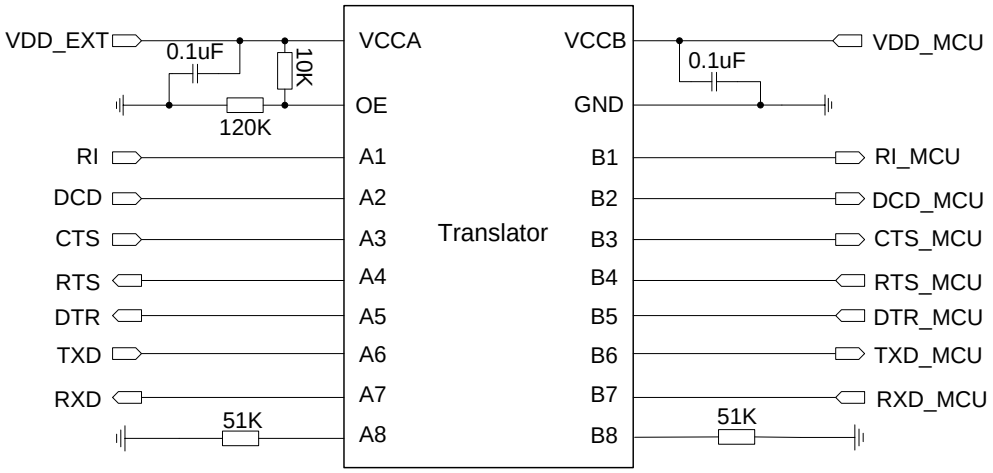

Figure 20: Reference Circuit with Translator Chip

Please visit http://www.ti.com for more information.

Another example with transistor translation circuit is shown as below. The circuit design of dotted line section can refer to the circuit design of solid line section, in terms of both module input and output circuit design. Please pay attention to the direction of connection.

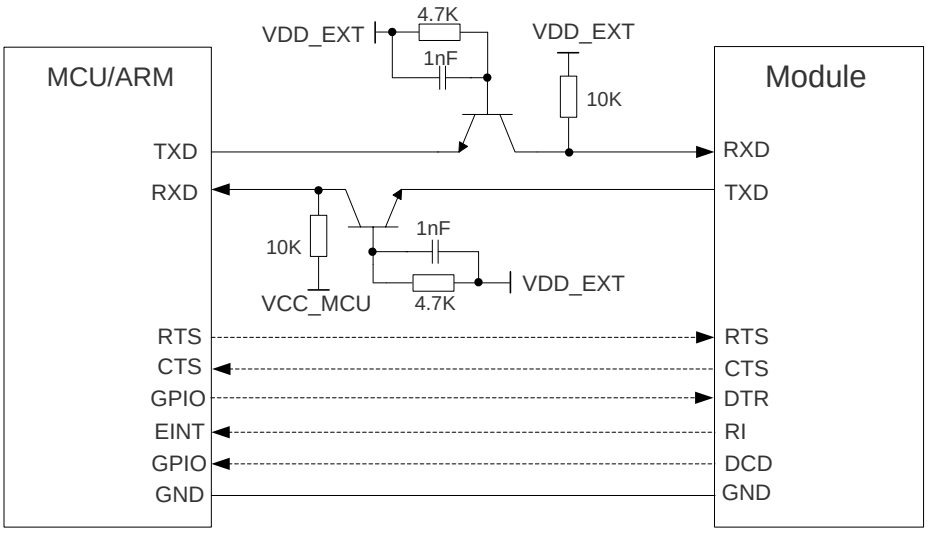

Figure 21: Reference Circuit with Transistor Circuit

NOTE

Transistor circuit solution is not suitable for applications with high baud rates exceeding 460Kbps.

3.12. PCM and I2C Interfaces

EG95 provides one Pulse Code Modulation (PCM) digital interface for audio design, which supports the following modes and one I2C interface:

- Primary mode (short frame synchronization, works as both master and slave)
- Auxiliary mode (long frame synchronization, works as master only)

In primary mode, the data is sampled on the falling edge of the PCM_CLK and transmitted on the rising edge. The PCM_SYNC falling edge represents the MSB. In this mode, the PCM interface supports 256KHz, 512KHz, 1024KHz or 2048KHz PCM_CLK at 8KHz PCM_SYNC, and also supports 4096KHz PCM_CLK at 16KHz PCM_SYNC.

In auxiliary mode, the data is also sampled on the falling edge of the PCM_CLK and transmitted on the rising edge. The PCM_SYNC rising edge represents the MSB. In this mode, the PCM interface operates with a 256KHz, 512KHz, 1024KHz or 2048KHz PCM_CLK and an 8KHz, 50% duty cycle PCM_SYNC.

EG95 supports 16-bit linear data format. The following figures show the primary mode's timing relationship with 8KHz PCM_SYNC and 2048KHz PCM_CLK, as well as the auxiliary mode's timing relationship with 8KHz PCM_SYNC and 256KHz PCM_CLK.

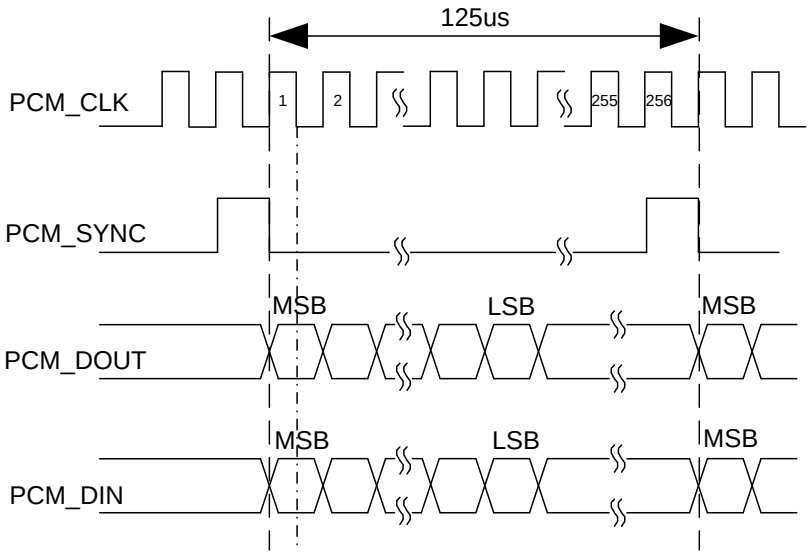

Figure 22: Primary Mode Timing

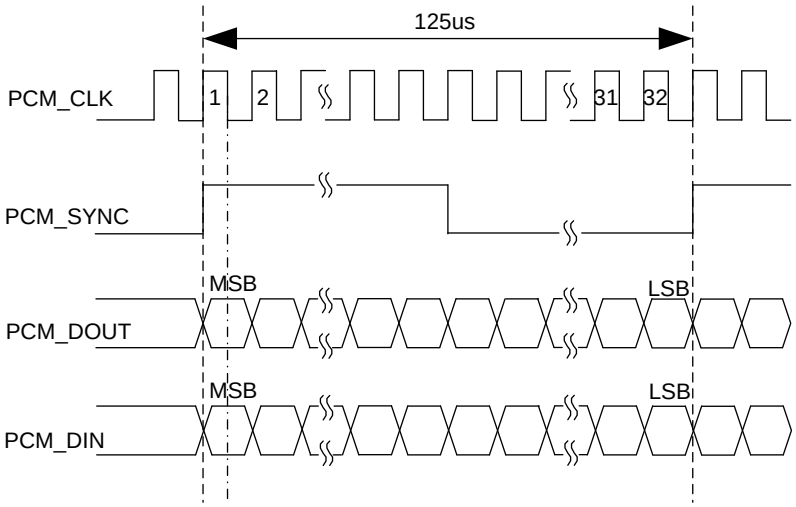

Figure 23: Auxiliary Mode Timing

The following table shows the pin definition of PCM and I2C interfaces which can be applied on audio codec design.

Table 14: Pin Definition of PCM and I2C Interfaces

Pin Name	Pin No.	I/O	Description	Comment
PCM_DIN	6	DI	PCM data input	1.8V power domain
PCM_DOUT	7	DO	PCM data output	1.8V power domain
PCM_SYNC	5	IO	PCM data frame synchronization signal	1.8V power domain
PCM_CLK	4	IO	PCM data bit clock	1.8V power domain
I2C_SCL	40	OD	I2C serial clock	Require an external pull-up to 1.8V
I2C_SDA	41	OD	I2C serial data	Require an external pull-up to 1.8V

Clock and mode can be configured by AT command, and the default configuration is master mode using short frame synchronization format with 2048KHz PCM_CLK and 8KHz PCM_SYNC. Please refer to ***document [2]*** about **AT+QDAI** command for details.

The following figure shows a reference design of PCM interface with external codec IC.

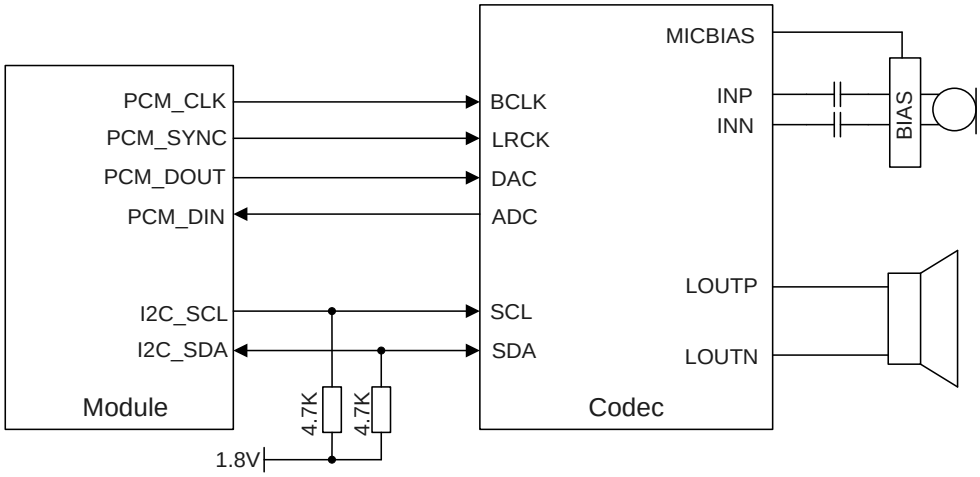

Figure 24: Reference Circuit of PCM Application with Audio Codec

NOTES

1. It is recommended to reserve an RC (R=22Ω, C=22pF) circuit on the PCM lines, especially for PCM_CLK.
2. EG95 works as a master device pertaining to I2C interface.

3.13. SPI Interface

SPI interface of EG95 acts as the master only. It provides a duplex, synchronous and serial communication link with the peripheral devices. It is dedicated to one-to-one connection, without chip select. Its operation voltage is 1.8V with clock rates up to 50MHz.

The following table shows the pin definition of SPI interface.

Table 15: Pin Definition of SPI Interface

Pin Name	Pin No.	I/O	Description	Comment
SPI_CLK	26	DO	Clock signal of SPI interface	1.8V power domain
SPI_MOSI	27	DO	Master output slave input of SPI interface	1.8V power domain
SPI_MISO	28	DI	Master input slave output of SPI interface	1.8V power domain

The following figure shows a reference design of SPI interface with peripherals.

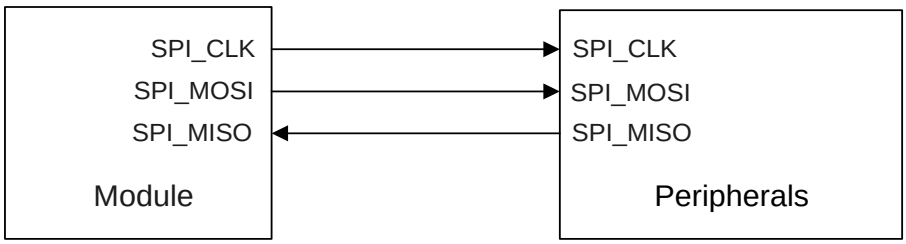

Figure 25: Reference Circuit of SPI Interface with Peripherals

NOTES

1. SPI interface is not supported on ThreadX modules.
2. The module provides 1.8V SPI interface. A level translator should be used between the module and the host if customer's application is equipped with a 3.3V processor or device interface.

3.14. Network Status Indication

The module provides one network indication pin: NETLIGHT. The pin is used to drive a network status indication LED.

The following tables describe the pin definition and logic level changes of NETLIGHT in different network status.

Table 16: Pin Definition of Network Status Indicator

Pin Name	Pin No.	I/O	Description	Comment
NETLIGHT	21	DO	Indicate the module's network activity status	1.8V power domain

Table 17: Working State of Network Status Indicator

Pin Name	Logic Level Changes	Network Status
NETLIGHT	Flicker slowly (200ms High/1800ms Low)	Network searching
	Flicker slowly (1800ms High/200ms Low)	Idle
	Flicker quickly (125ms High/125ms Low)	Data transfer is ongoing
	Always High	Voice calling

A reference circuit is shown in the following figure.

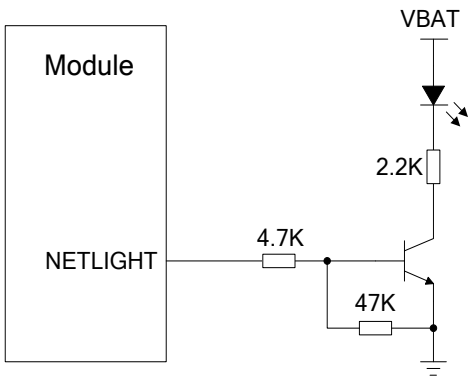

Figure 26: Reference Circuit of Network Status Indicator

3.15. STATUS

The STATUS pin is set as the module's operation status indicator. It will output high level when the module is powered on. The following table describes the pin definition of STATUS.

Table 18: Pin Definition of STATUS

Pin Name	Pin No.	I/O	Description	Comment
STATUS	20	DO	Indicate the module's operation status	1.8V power domain. If unused, keep it open.

The following figure shows the reference circuit of STATUS.

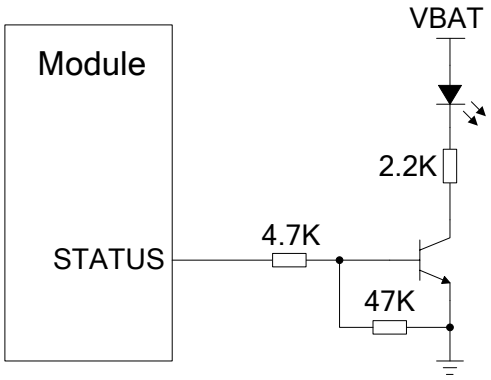

Figure 27: Reference Circuit of STATUS

3.16. ADC Interface

The module provides one analog-to-digital converter (ADC) interface. **AT+QADC=0** command can be used to read the voltage value on ADC0 pin. For more details about the command, please refer to ***document [2]***.

In order to improve the accuracy of ADC voltage values, the traces of ADC should be surrounded by ground.

Table 19: Pin Definition of ADC Interface

Pin Name	Pin No.	I/O	Description	Comment
ADC0	24	AI	Force the module to enter emergency download mode	If unused, keep this pin open.

The following table describes the characteristics of ADC interface.

Table 20: Characteristics of ADC Interface

Parameter	Min.	Typ.	Max.	Unit
ADC0 Voltage Range	0.3		VBAT_BB	V
ADC Resolution			15	bits

NOTES

1. It is prohibited to supply any voltage to ADC pins when ADC pins are not powered by VBAT.
2. It is recommended to use resistor divider circuit for ADC application.

3.17. Behaviors of RI

AT+QCFG="risignaltype","physical" command can be used to configure RI behavior. The default RI behaviors can be changed by **AT+QCFG="urc/ri/ring"** command. Please refer to ***document [2]*** for details.

No matter on which port URC is presented, URC will trigger the behavior of RI pin.

NOTE

URC can be outputted from UART port, USB AT port and USB modem port through configuration via **AT+QURCCFG** command. The default port is USB AT port.

The default behaviors of the RI are shown as below.

Table 21: Default Behaviors of RI

State	Response
Idle	RI keeps at high level
URC	RI outputs 120ms low pulse when a new URC returns

3.18. USB_BOOT Interface

EG95 provides a USB_BOOT pin. Customers can pull up USB_BOOT to 1.8V before VDD_EXT is powered up, and the module will enter emergency download mode when it is powered on. In this mode, the module supports firmware upgrade over USB interface.

Table 22: Pin Definition of USB_BOOT Interface

Pin Name	Pin No.	I/O	Description	Comment
USB_BOOT	75	DI	Force the module to enter emergency download mode	1.8V power domain. Active high. It is recommended to reserve test point.

The following figures show the reference circuit of USB_BOOT interface and timing sequence of entering emergency download mode.

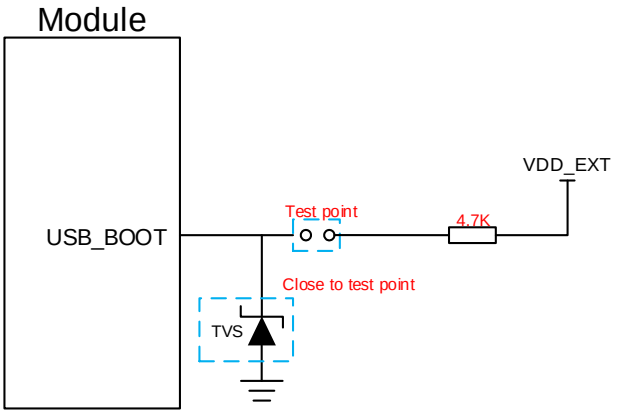

Figure 28: Reference Circuit of USB_BOOT Interface

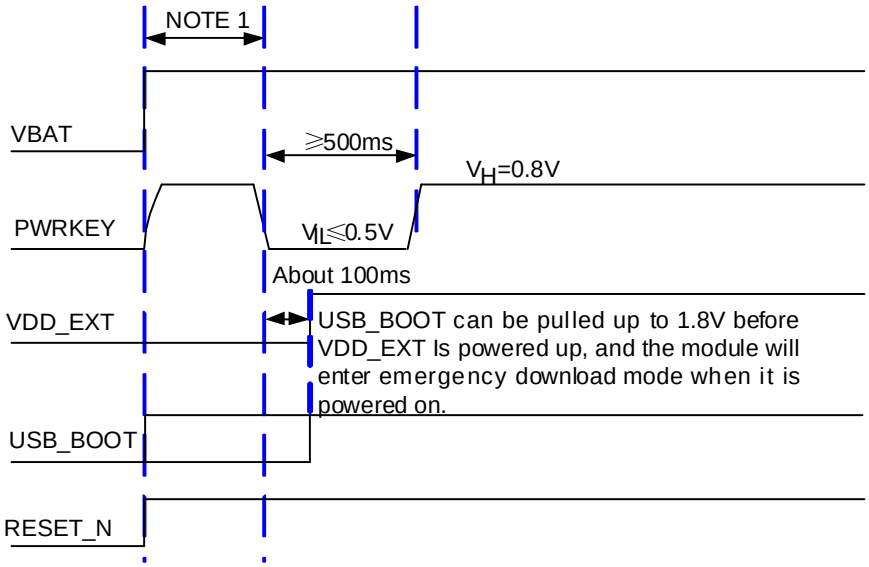

Figure 29: Timing Sequence for Entering Emergency Download Mode

NOTES

1. Please make sure that VBAT is stable before pulling down PWRKEY pin. It is recommended that the time between powering up VBAT and pulling down PWRKEY pin is no less than 30ms.
2. When using MCU to control module to enter the emergency download mode, please follow the above timing sequence. It is not recommended to pull up USB_BOOT to 1.8V before powering up VBAT. Short the test points as shown in ***Figure 28*** can manually force the module to enter download mode.

4 GNSS Receiver

4.1. General Description

EG95 includes a fully integrated global navigation satellite system solution that supports Gen8C-Lite of Qualcomm (GPS, GLONASS, BeiDou, Galileo and QZSS).

EG95 supports standard NMEA-0183 protocol, and outputs NMEA sentences at 1Hz data update rate via USB interface by default.

By default, EG95 GNSS engine is switched off. It has to be switched on via AT command. For more details about GNSS engine technology and configurations, please refer to ***document [3]***.

4.2. GNSS Performance

The following table shows GNSS performance of EG95.

Table 23: GNSS Performance

Parameter	Description	Conditions	Typ.	Unit
Sensitivity (GNSS)	Cold start	Autonomous	-146	dBm
	Reacquisition	Autonomous	-157	dBm
	Tracking	Autonomous	-157	dBm
TTFF (GNSS)	Cold start @open sky	Autonomous	34.6	s
		XTRA enabled	11.57	s
	Warm start @open sky	Autonomous	26.09	s
		XTRA enabled	3.7	s
	Hot start	Autonomous	1.8	s

	@open sky	XTRA enabled	3.4	s
Accuracy (GNSS)	CEP-50	Autonomous @open sky	<2.5	m

NOTES

1. Tracking sensitivity: the lowest GNSS signal value at the antenna port on which the module can keep on positioning for 3 minutes.
2. Reacquisition sensitivity: the lowest GNSS signal value at the antenna port on which the module can fix position again within 3 minutes after loss of lock.
3. Cold start sensitivity: the lowest GNSS signal value at the antenna port on which the module fixes position within 3 minutes after executing cold start command.

4.3. Layout Guidelines

The following layout guidelines should be taken into account in customers' design.

- Maximize the distance among GNSS antenna, main antenna and Rx-diversity antenna.
- Digital circuits such as (U)SIM card, USB interface, camera module and display connector should be kept away from the antennas.
- Use ground vias around the GNSS trace and sensitive analog signal traces to provide coplanar isolation and protection.
- Keep the characteristic impedance for ANT_GNSS trace as 50Ω.

Please refer to ***Chapter 5*** for GNSS antenna reference design and antenna installation information.

5 Antenna Interfaces

EG95 antenna interfaces include a main antenna interface and an Rx-diversity antenna interface which is used to resist the fall of signals caused by high speed movement and multipath effect, and a GNSS antenna interface which is only supported on EG95-NA/-EX/-NAX. The impedance of the antenna port is 50Ω.

5.1. Main/Rx-diversity Antenna Interfaces

5.1.1. Pin Definition

The pin definition of main antenna and Rx-diversity antenna interfaces is shown below.

Table 24: Pin Definition of RF Antenna

Pin Name	Pin No.	I/O	Description	Comment
ANT_MAIN	60	IO	Main antenna pad	50Ω impedance
ANT_DIV (EG95-E)	49	AI	Receive diversity antenna pad	50Ω impedance
ANT_DIV (EG95-NA/-EX/-NAX)	56	AI	Receive diversity antenna pad	50Ω impedance

5.1.2. Operating Frequency

Table 25: Module Operating Frequencies

3GPP Band	Transmit	Receive	Unit
EGSM900	880~915	925~960	MHz
DCS1800	1710~1785	1805~1880	MHz
WCDMA B1	1920~1980	2110~2170	MHz
WCDMA B2	1850~1910	1930~1990	MHz

WCDMA B4	1710~1755	2110~2155	MHz
WCDMA B5	824~849	869~894	MHz
WCDMA B8	880~915	925~960	MHz
LTE-FDD B1	1920~1980	2110~2170	MHz
LTE-FDD B2	1850~1910	1930~1990	MHz
LTE-FDD B3	1710~1785	1805~1880	MHz
LTE-FDD B4	1710~1755	2110~2155	MHz
LTE-FDD B5	824~849	869~894	MHz
LTE-FDD B7	2500~2570	2620~2690	MHz
LTE-FDD B8	880~915	925~960	MHz
LTE-FDD B12	699~716	729~746	MHz
LTE-FDD B13	777~787	746~756	MHz
LTE-FDD B20	832~862	791~821	MHz
LTE-FDD B25	1850~1915	1930~1995	MHz
LTE-FDD B26	814~849	859~894	MHz
LTE-FDD B28	703~748	758~803	MHz

5.1.3. Reference Design of RF Antenna Interface

A reference design of ANT_MAIN and ANT_DIV antenna pads is shown as below. A π-type matching circuit should be reserved for better RF performance. The capacitors are not mounted by default.

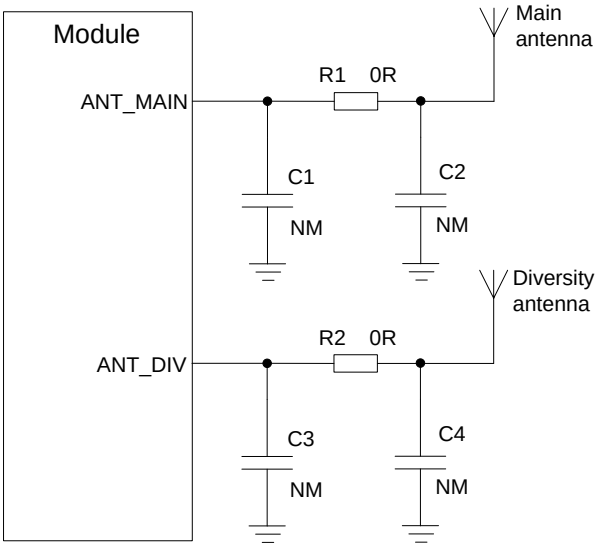

Figure 30: Reference Circuit of RF Antenna Interface

NOTES

1. Keep a proper distance between the main antenna and the Rx-diversity antenna to improve the receiving sensitivity.
2. ANT_DIV function is enabled by default. **AT+QCFG="diversity",0** command can be used to disable receive diversity.
3. Place the π-type matching components (R1/C1/C2, R2/C3/C4) as close to the antenna as possible.

5.1.4. Reference Design of RF Layout

For user's PCB, the characteristic impedance of all RF traces should be controlled as 50Ω. The impedance of the RF traces is usually determined by the trace width (W), the materials' dielectric constant, height from the reference ground to the signal layer (H), and the space between the RF trace and the ground (S). Microstrip and coplanar waveguide are typically used in RF layout to control characteristic impedance. The following figures are reference designs of microstrip or coplanar waveguide with different PCB structures.

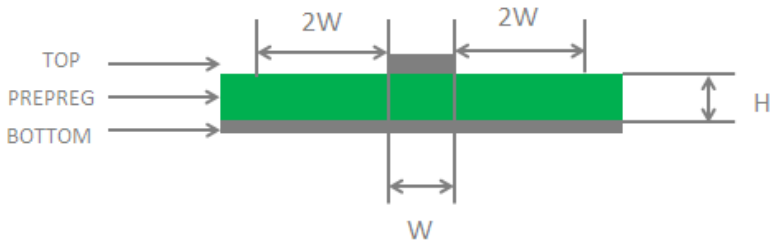

Figure 31: Microstrip Line Design on a 2-layer PCB

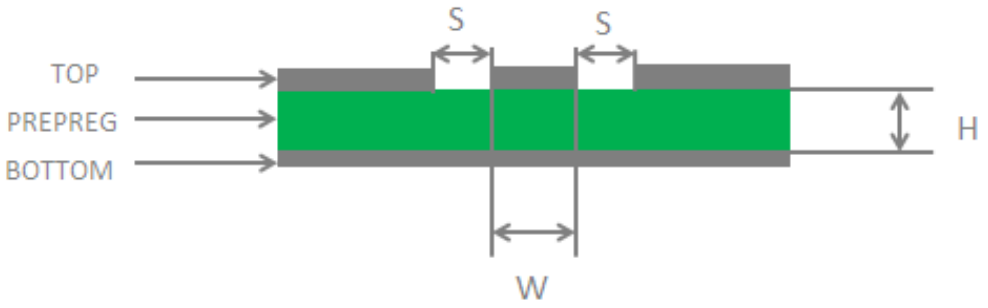

Figure 32: Coplanar Waveguide Design on a 2-layer PCB

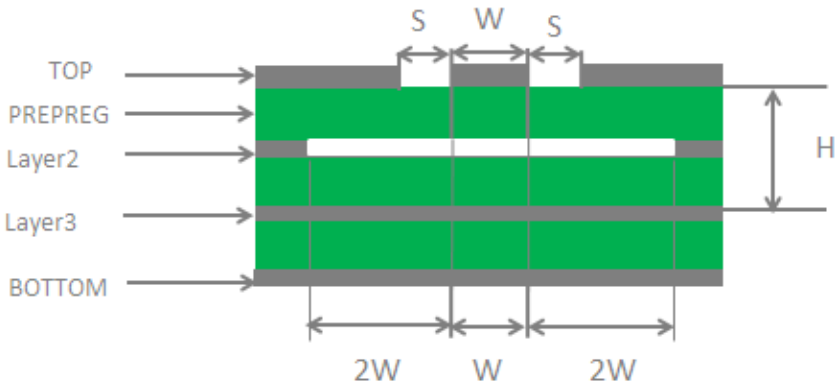

Figure 33: Coplanar Waveguide Design on a 4-layer PCB (Layer 3 as Reference Ground)

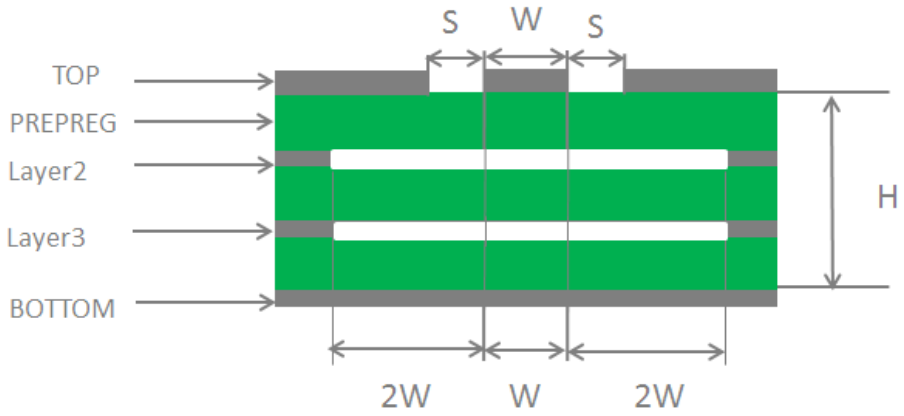

Figure 34: Coplanar Waveguide Design on a 4-layer PCB (Layer 4 as Reference Ground)

In order to ensure RF performance and reliability, the following principles should be complied with in RF layout design:

- Use impedance simulation tool to control the characteristic impedance of RF traces as 50Ω.
- The GND pins adjacent to RF pins should not be designed as thermal relief pads, and should be fully connected to ground.
- The distance between the RF pins and the RF connector should be as short as possible, and all the right angle traces should be changed to curved ones.
- There should be clearance area under the signal pin of the antenna connector or solder joint.
- The reference ground of RF traces should be complete. Meanwhile, adding some ground vias around RF traces and the reference ground could help to improve RF performance. The distance between the ground vias and RF traces should be no less than two times the width of RF signal traces (2*W).

For more details about RF layout, please refer to ***document [5]***.

5.2. GNSS Antenna Interface

The GNSS antenna interface is only supported on EG95-NA/-EX/-NAX.The following tables show pin definition and frequency specification of GNSS antenna interface.

Table 26: Pin Definition of GNSS Antenna Interface

Pin Name	Pin No.	I/O	Description	Comment
ANT_GNSS (EG95-NA/-EX/-NAX)	49	AI	GNSS antenna	50Ω impedance

Table 27: GNSS Frequency

Type	Frequency	Unit
GPS	1575.42±1.023	MHz
GLONASS	1597.5~1605.8	MHz
Galileo	1575.42±2.046	MHz
BeiDou	1561.098±2.046	MHz
QZSS	1575.42	MHz

A reference design of GNSS antenna is shown as below.

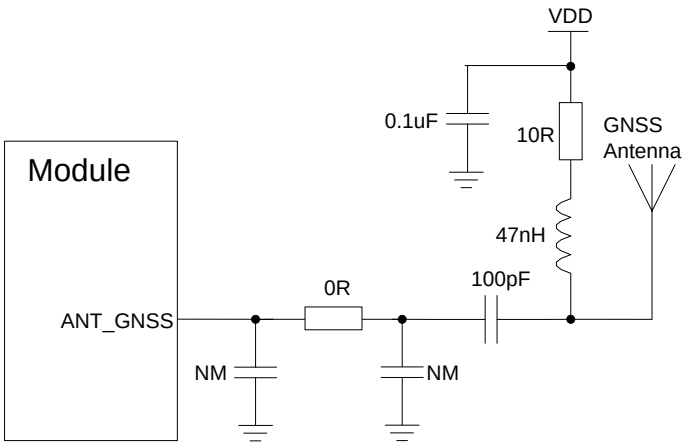

Figure 35: Reference Circuit of GNSS Antenna

NOTES

1. An external LDO can be selected to supply power according to the active antenna requirement.
2. If the module is designed with a passive antenna, then the VDD circuit is not needed.

5.3. Antenna Installation

5.3.1. Antenna Requirement

The following table shows the requirements on main antenna, Rx-diversity antenna and GNSS antenna.

Table 28: Antenna Requirements

Type	Requirements
GNSS[1)]	Frequency range: 1559MHz~1609MHz Polarization: RHCP or linear VSWR: < 2 (Typ.) Passive antenna gain: > 0dBi Active antenna noise figure: < 1.5dB Active antenna gain: > 0dBi Active antenna embedded LNA gain: < 17dB
GSM/WCDMA/LTE	VSWR: ≤ 2 Efficiency: > 30%

	Max input power: 50W Input impedance: 50Ω Cable insertion loss: < 1dB (EGSM900, WCDMA B5/B8, LTE-FDD B5/B8/B12/B13/B20/B26/B28) Cable insertion loss: < 1.5dB (DCS1800, WCDMA B1/B2/B4, LTE-FDD B1/B2/B3/B4/B25) Cable insertion loss: < 2dB (LTE-FDD B7)

NOTE

[1] It is recommended to use a passive GNSS antenna when LTE B13 or B14 is supported, as the use of active antenna may generate harmonics which will affect the GNSS performance.

5.3.2. Recommended RF Connector for Antenna Installation

If RF connector is used for antenna connection, it is recommended to use U.FL-R-SMT connector provided by *Hirose*.

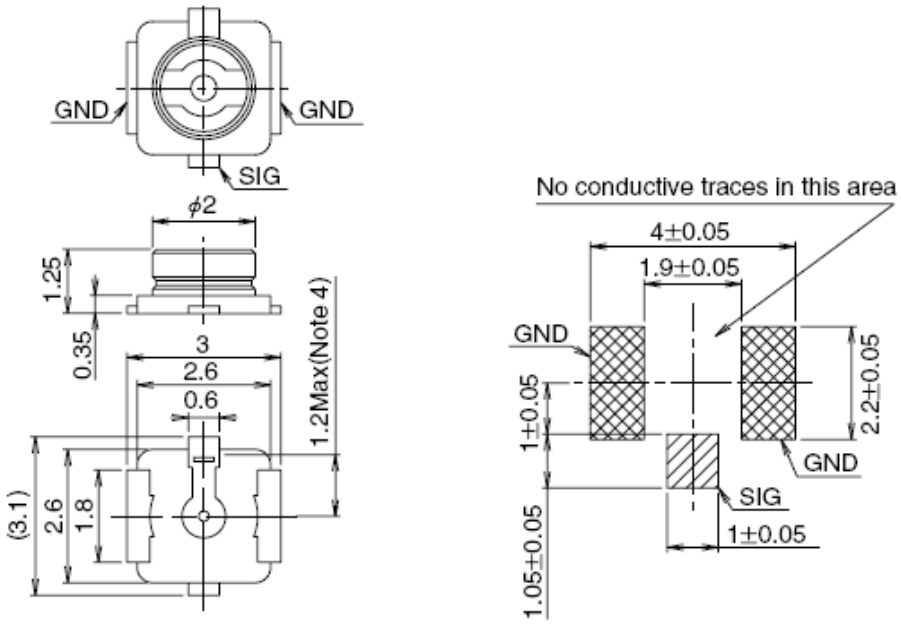

Figure 36: Dimensions of the U.FL-R-SMT Connector (Unit: mm)

U.FL-LP serial connectors listed in the following figure can be used to match the U.FL-R-SMT.

	U.FL-LP-040	U.FL-LP-066	U.FL-LP(V)-040	U.FL-LP-062	U.FL-LP-088
Part No.	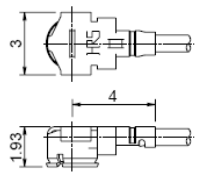	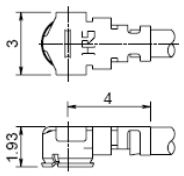	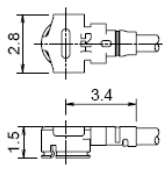	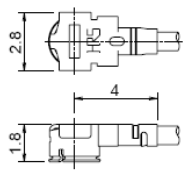	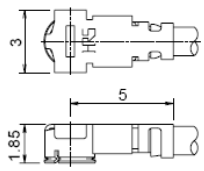
Mated Height	2.5mm Max. (2.4mm Nom.)	2.5mm Max. (2.4mm Nom.)	2.0mm Max. (1.9mm Nom.)	2.4mm Max. (2.3mm Nom.)	2.4mm Max. (2.3mm Nom.)
Applicable cable	Dia. 0.81mm Coaxial cable	Dia. 1.13mm and Dia. 1.32mm Coaxial cable	Dia. 0.81mm Coaxial cable	Dia. 1mm Coaxial cable	Dia. 1.37mm Coaxial cable
Weight (mg)	53.7	59.1	34.8	45.5	71.7
RoHS	YES				

Figure 37: Mechanicals of U.FL-LP Connectors

The following figure describes the space factor of mated connector.

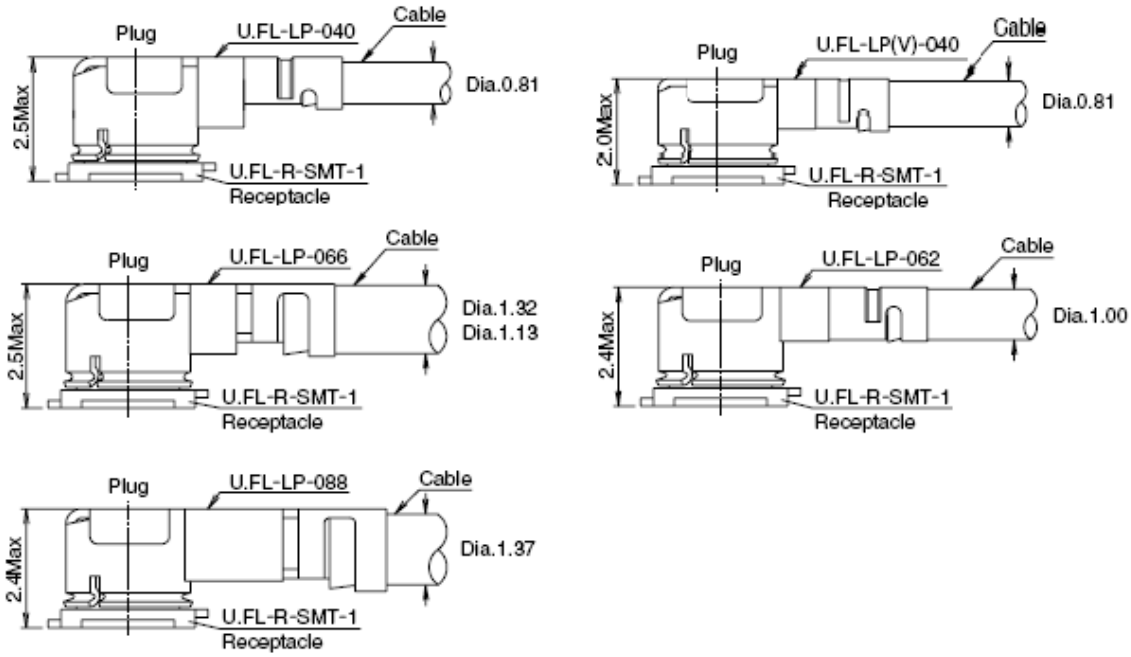

Figure 38: Space Factor of Mated Connector (Unit: mm)

For more details, please visit http://www.hirose.com.

6 Electrical, Reliability and Radio Characteristics

6.1. Absolute Maximum Ratings

Absolute maximum ratings for power supply and voltage on digital and analog pins of the module are listed in the following table.

Table 29: Absolute Maximum Ratings

Parameter	Min.	Max.	Unit
VBAT_RF/VBAT_BB	-0.3	4.7	V
USB_VBUS	-0.3	5.5	V
Peak Current of VBAT_BB	0	0.8	A
Peak Current of VBAT_RF	0	1.8	A
Voltage at Digital Pins	-0.3	2.3	V

6.2. Power Supply Ratings

Table 30: Power Supply Ratings

Parameter	Description	Conditions	Min.	Typ.	Max.	Unit
VBAT	VBAT_BB and VBAT_RF	The actual input voltages must be kept between the minimum and maximum values.	3.3	3.8	4.3	V

	Voltage drop during burst transmission	Maximum power control level on EGSM900			400	mV
I_{VBAT}	Peak supply current (during transmission slot)	Maximum power control level on EGSM900		1.8	2.0	A
USB_VBUS	USB connection detection		3.0	5.0	5.25	V

6.3. Operation and Storage Temperatures

The operation and storage temperatures are listed in the following table.

Table 31: Operation and Storage Temperatures

Parameter	Min.	Typ.	Max.	Unit
Operation Temperature Range [1)]	-35	+25	+75	ºC
Extended Temperature Range [2)]	-40		+85	ºC
Storage Temperature Range	-40		+90	ºC

NOTES

1. [1)] Within operation temperature range, the module is 3GPP compliant.
2. [2)] Within extended temperature range, the module remains the ability to establish and maintain a voice, SMS, data transmission, emergency call* (emergency call is not supported on ThreadX module), etc. There is no unrecoverable malfunction. There are also no effects on radio spectrum and no harm to radio network. Only one or more parameters like Pout might reduce in their value and exceed the specified tolerances. When the temperature returns to the normal operating temperature levels, the module will meet 3GPP specifications again.
3. "*" means under development.

6.4. Current Consumption

The values of current consumption are shown below.

Table 32: EG95-E Current Consumption

Parameter	Description	Conditions	Typ.	Unit
I_{VBAT}	OFF state	Power down	15	uA
	Sleep state	**AT+CFUN=0** (USB disconnected)	1.3	mA
		GSM DRX=2 (USB disconnected)	2.3	mA
		GSM DRX=5 (USB suspended)	2.0	mA
		GSM DRX=9 (USB disconnected)	1.6	mA
		WCDMA PF=64 (USB disconnected)	1.8	mA
		WCDMA PF=64 (USB suspended)	2.1	mA
		WCDMA PF=512 (USB disconnected)	1.3	mA
		LTE-FDD PF=64 (USB disconnected)	2.3	mA
		LTE-FDD PF=64 (USB suspended)	2.6	mA
		LTE-FDD PF=256 (USB disconnected)	1.5	mA
	Idle state	GSM DRX=5 (USB disconnected)	21.0	mA
		GSM DRX=5 (USB connected)	31.0	mA
		WCDMA PF=64 (USB disconnected)	21.0	mA
		WCDMA PF=64 (USB connected)	31.0	mA
		LTE-FDD PF=64 (USB disconnected)	21.0	mA
		LTE-FDD PF=64 (USB connected)	31.0	mA
	GPRS data transfer	EGSM900 4DL/1UL @32.35dBm	268	mA
		EGSM900 3DL/2UL @32.16dBm	459	mA
		EGSM900 2DL/3UL @30.57dBm	547	mA

	EGSM900 1DL/4UL @29.45dBm	631	mA
	DCS1800 4DL/1UL @29.14dBm	177	mA
	DCS1800 3DL/2UL @29.07dBm	290	mA
	DCS1800 2DL/3UL @28.97dBm	406	mA
	DCS1800 1DL/4UL @28.88dBm	517	mA
EDGE data transfer	EGSM900 4DL/1UL PCL=8 @26.88dBm	167	mA
	EGSM900 3DL/2UL PCL=8 @26.84dBm	278	mA
	EGSM900 2DL/3UL PCL=8 @26.76dBm	385	mA
	EGSM900 1DL/4UL PCL=8 @26.54dBm	492	mA
	DCS1800 4DL/1UL PCL=2 @25.66dBm	169	mA
	DCS1800 3DL/2UL PCL=2 @25.59dBm	256	mA
	DCS1800 2DL/3UL PCL=2 @25.51dBm	341	mA
	DCS1800 1DL/4UL PCL=2 @25.38dBm	432	mA
WCDMA data transfer	WCDMA B1 HSDPA @22.48dBm	586	mA
	WCDMA B1 HSUPA @22.29dBm	591	mA
	WCDMA B8 HSDPA @22.24dBm	498	mA
	WCDMA B8 HSUPA @21.99dBm	511	mA
LTE data transfer	LTE-FDD B1 @23.37dBm	736	mA
	LTE-FDD B3 @22.97dBm	710	mA
	LTE-FDD B7 @23.17dBm	775	mA
	LTE-FDD B8 @23.04dBm	651	mA
	LTE-FDD B20 @23.21dBm	699	mA
	LTE-FDD B28A @22.76dBm	714	mA
GSM voice call	EGSM900 PCL=5 @32.36dBm	271	mA
	DCS1800 PCL=0 @29.19dBm	181	mA

	WCDMA voice call	WCDMA B1 @22.91dBm	632	mA
		WCDMA B8 @23.14dBm	546	mA

Table 33: EG95-NA Current Consumption

Parameter	Description	Conditions	Typ.	Unit
I_{VBAT}	OFF state	Power down	13	uA
	Sleep state	**AT+CFUN=0** (USB disconnected)	1.0	mA
		WCDMA PF=64 (USB disconnected)	2.2	mA
		WCDMA PF=64 (USB suspended)	2.5	mA
		WCDMA PF=512 (USB disconnected)	1.4	mA
		LTE-FDD PF=64 (USB disconnected)	2.6	mA
		LTE-FDD PF=64 (USB suspended)	2.9	mA
		LTE-FDD PF=256 (USB disconnected)	1.7	mA
	Idle state	WCDMA PF=64 (USB disconnected)	14.0	mA
		WCDMA PF=64 (USB connected)	26.0	mA
		LTE-FDD PF=64 (USB disconnected)	15.0	mA
		LTE-FDD PF=64 (USB connected)	26.0	mA
	WCDMA data transfer	WCDMA B2 HSDPA CH9938 @22.45 dBm	569	mA
		WCDMA B2 HSUPA CH9938 @21.73 dBm	559	mA
		WCDMA B4 HSDPA CH1537 @23.05 dBm	572	mA
		WCDMA B4 HSUPA CH1537 @22.86 dBm	586	mA
		WCDMA B5 HSDPA CH4407 @23 dBm	518	mA
		WCDMA B5 HSUPA CH4407 @ 22.88 dBm	514	mA
	LTE data transfer	LTE-FDD B2 CH1100 @23.29 dBm	705	mA
		LTE-FDD B4 CH2175 @23.19 dBm	693	mA

		LTE-FDD B5 CH2525 @23.39 dBm	601	mA
		LTE-FDD B12 CH5060 @23.16 dBm	650	mA
		LTE-FDD B13 CH5230 @23.36 dBm	602	mA
	WCDMA voice call	WCDMA B2 CH9938 @23.34 dBm	627	mA
		WCDMA B4 CH1537 @23.47 dBm	591	mA
		WCDMA B5 CH4357 @ 23.37 dBm	536	mA

Table 34: EG95-EX Current Consumption

Parameter	Description	Conditions	Typ.	Unit
I_{VBAT}	OFF state	Power down	15	uA
	Sleep state	**AT+CFUN=0** (USB disconnected)	1.3	mA
		GSM DRX=2 (USB disconnected)	2.3	mA
		GSM DRX=5 (USB suspend)	2.0	mA
		GSM DRX=9 (USB disconnected)	1.6	mA
		WCDMA PF=64 (USB disconnected)	1.8	mA
		WCDMA PF=64 (USB suspend)	2.1	mA
		WCDMA PF=512 (USB disconnected)	1.3	mA
		LTE-FDD PF=64 (USB disconnected)	2.3	mA
		LTE-FDD PF=64 (USB suspend)	2.6	mA
		LTE-FDD PF=256 (USB disconnected)	1.5	mA
	Idle state	GSM DRX=5 (USB disconnected)	21.0	mA
		GSM DRX=5 (USB connected)	31.0	mA
		WCDMA PF=64 (USB disconnected)	21.0	mA
		WCDMA PF=64 (USB connected)	31.0	mA
		LTE-FDD PF=64 (USB disconnected)	21.0	mA

	LTE-FDD PF=64 (USB connected)	31.0	mA
GPRS data transfer	EGSM900 4DL/1UL @33.06dBm	247.9	mA
	EGSM900 3DL/2UL @32.93dBm	450.8	mA
	EGSM900 2DL/3UL @31.1dBm	536.4	mA
	EGSM900 1DL/4UL @29.78dBm	618	mA
	DCS1800 4DL/1UL @29.3dBm	144	mA
	DCS1800 3DL/2UL @29.3dBm	253.4	mA
	DCS1800 2DL/3UL @29.21dBm	355.4	mA
	DCS1800 1DL/4UL @29.07dBm	455.7	mA
EDGE data transfer	EGSM900 4DL/1UL PCL=8 @27.29dBm	169.5	mA
	EGSM900 3DL/2UL PCL=8 @27.01dBm	305.06	mA
	EGSM900 2DL/3UL PCL=8 @26.86dBm	434	mA
	EGSM900 1DL/4UL PCL=8 @25.95dBm	548	mA
	DCS1800 4DL/1UL PCL=2 @26.11dBm	135	mA
	DCS1800 3DL/2UL PCL=2 @25.8dBm	244	mA
	DCS1800 2DL/3UL PCL=2 @25.7dBm	349	mA
	DCS1800 1DL/4UL PCL=2 @25.6dBm	455	mA
WCDMA data transfer	WCDMA B1 HSDPA @22.48dBm	485	mA
	WCDMA B1 HSUPA @21.9dBm	458	mA
	WCDMA B8 HSDPA @22.6dBm	556	mA
	WCDMA B8 HSUPA @22.02dBm	520	mA
LTE data transfer	LTE-FDD B1 @23.37dBm	605	mA
	LTE-FDD B3 @23.3dBm	667	mA
	LTE-FDD B7 @23.2dBm	783	mA
	LTE-FDD B8 @23.09dBm	637	mA

		LTE-FDD B20 @23.21dBm	646	mA
		LTE-FDD B28 @22.76dBm	661	mA
	GSM voice call	EGSM900 PCL=5 @32.36dBm	259	mA
		DCS1800 PCL=0 @29.5dBm	149	mA
	WCDMA voice call	WCDMA B1 @23.4dBm	494	mA
		WCDMA B8 @23.6dBm	608	mA

Table 35: EG95-NAX Current Consumption

Parameter	Description	Conditions	Typ.	Unit
I_{VBAT}	OFF state	Power down	11	uA
	Sleep state	**AT+CFUN=0** (USB disconnected)	1.1	mA
		WCDMA PF=64 (USB disconnected)	2.0	mA
		WCDMA PF=64 (USB suspend)	2.4	mA
		WCDMA PF=512 (USB disconnected)	1.5	mA
		LTE-FDD PF=64 (USB disconnected)	2.6	mA
		LTE-FDD PF=64 (USB suspend)	2.8	mA
		LTE-FDD PF=256 (USB disconnected)	1.8	mA
	Idle state	WCDMA PF=64 (USB disconnected)	17.4	mA
		WCDMA PF=64 (USB connected)	34.3	mA
		LTE-FDD PF=64 (USB disconnected)	17.8	mA
		LTE-FDD PF=64 (USB connected)	34.7	mA
	WCDMA data transfer	WCDMA B2 HSDPA @21.64dBm	547	mA
		WCDMA B2 HSUPA @21.13dBm	543	mA
		WCDMA B4 HSDPA @22.15dBm	554	mA
		WCDMA B4 HSUPA @22.21dBm	541	mA

		WCDMA B5 HSDPA @22.39dBm	502	mA
		WCDMA B5 HSUPA @22.12dBm	509	mA
	LTE data transfer	LTE-FDD B2 @23.07dBm	691	mA
		LTE-FDD B4 @23.09dBm	713	mA
		LTE-FDD B5 @23.31dBm	580	mA
		LTE-FDD B12 @23.30dBm	627	mA
		LTE-FDD B13 @23.32dBm	619	mA
		LTE-FDD B25 @23.03dBm	693	mA
		LTE-FDD B26 @22.97dBm	628	mA
	WCDMA voice call	WCDMA B2 @22.89dBm	591	mA
		WCDMA B4 @22.76dBm	577	mA
		WCDMA B5 @23.03dBm	516	mA

Table 36: GNSS Current Consumption of EG95

Parameter	Description	Conditions	Typ.	Unit
I_{VBAT} (GNSS)	Searching (**AT+CFUN=0**)	Cold start @Passive Antenna	54	mA
		Hot Start @Passive Antenna	54	mA
		Lost state @Passive Antenna	53	mA
	Tracking (**AT+CFUN=0**)	Open Sky @Passive Antenna	32	mA

6.5. RF Output Power

The following table shows the RF output power of EG95 module.

Table 37: RF Output Power

Frequency	Max.	Min.
EGSM900	33dBm±2dB	5dBm±5dB
DCS1800	30dBm±2dB	0dBm±5dB
EGSM900 (8-PSK)	27dBm±3dB	5dBm±5dB
DCS1800 (8-PSK)	26dBm±3dB	0dBm±5dB
WCDMA B1/B2/B4/B5/B8	24dBm+1/-3dB	<-49dBm
LTE-FDD B1/B2/B3/B4/B5/B7/ B8/B12/B13/B20/B25/B26/B28	23dBm±2dB	<-39dBm

NOTE

In GPRS 4 slots TX mode, the maximum output power is reduced by 3.0dB. The design conforms to the GSM specification as described in ***Chapter 13.16*** of *3GPP TS 51.010-1*.

6.6. RF Receiving Sensitivity

The following tables show the conducted RF receiving sensitivity of EG95 module.

Table 38: EG95-E Conducted RF Receiving Sensitivity

Frequency	Primary	Diversity	SIMO	3GPP
EGSM900	-108.6dBm	NA	NA	-102dBm
DCS1800	-109.4 dBm	NA	NA	-102dbm
WCDMA B1	-109.5dBm	-110dBm	-112.5dBm	-106.7dBm
WCDMA B8	-109.5dBm	-110dBm	-112.5dBm	-103.7dBm
LTE-FDD B1 (10MHz)	-97.5dBm	-98.3dBm	-101.4dBm	-96.3dBm
LTE-FDD B3 (10MHz)	-98.3dBm	-98.5dBm	-101.5dBm	-93.3dBm
LTE-FDD B7 (10MHz)	-96.3dBm	-98.4dBm	-101.3dBm	-94.3dBm

LTE-FDD B8 (10MHz)	-97.1dBm	-99.1dBm	-101.2dBm	-93.3dBm
LTE-FDD B20 (10MHz)	-97dBm	-99dBm	-101.3dBm	-93.3dBm
LTE-FDD B28A (10MHz)	-98.3dBm	-99dBm	-101.4dBm	-94.8dBm

Table 39: EG95-NA Conducted RF Receiving Sensitivity

Frequency	Primary	Diversity	SIMO	3GPP
WCDMA B2	-110dBm	-110dBm	-112.5dBm	-104.7dBm
WCDMA B4	-110dBm	-110dBm	-112.5dBm	-106.7dBm
WCDMA B5	-111dBm	-111dBm	-113dBm	-104.7dBm
LTE-FDD B2 (10MHz)	-98dBm	-99dBm	-102.2dBm	-94.3dBm
LTE-FDD B4 (10MHz)	-97.8dBm	-99.5dBm	-102.2dBm	-96.3dBm
LTE-FDD B5 (10MHz)	-99.6dBm	-100.3dBm	-103dBm	-94.3dBm
LTE-FDD B12 (10MHz)	-99.5dBm	-100dBm	-102.5dBm	-93.3dBm
LTE-FDD B13 (10MHz)	-99.2dBm	-100dBm	-102.5dBm	-93.3dBm

Table 40: EG95-EX Conducted RF Receiving Sensitivity

Frequency	Primary	Diversity	SIMO	3GPP
EGSM900	-109.8dBm	NA	NA	-102dBm
DCS1800	-109.8 dBm	NA	NA	-102dbm
WCDMA B1	-110dBm	-111dBm	-112.5dBm	-106.7dBm
WCDMA B8	-110dBm	-111dBm	-112.5dBm	-103.7dBm
LTE-FDD B1 (10MHz)	-98.7dBm	-98.8dBm	-102.4dBm	-96.3dBm
LTE-FDD B3 (10MHz)	-98.3dBm	-99.5dBm	-102.5dBm	-93.3dBm
LTE-FDD B7 (10MHz)	-97.5dBm	-98.4dBm	-100.3dBm	-94.3dBm
LTE-FDD B8 (10MHz)	-98.7dBm	-99.6dBm	-102.2dBm	-93.3dBm

LTE-FDD B20 (10MHz)	-97dBm	-97.5dBm	-102.2dBm	-93.3dBm
LTE-FDD B28 (10MHz)	-98.2dBm	-99.5dBm	-102dBm	-94.8dBm

Table 41: EG95-NAX Conducted RF Receiving Sensitivity

Frequency	Primary	Diversity	SIMO	3GPP
WCDMA B2	-110dBm	-110dBm	-112.5dBm	-104.7dBm
WCDMA B4	-110dBm	-110dBm	-112.5dBm	-106.7dBm
WCDMA B5	-111dBm	-111dBm	-113dBm	-104.7dBm
LTE-FDD B2 (10MHz)	-98dBm	-99dBm	-102.2dBm	-94.3dBm
LTE-FDD B4 (10MHz)	-97.8dBm	-99.5dBm	-102.2dBm	-96.3dBm
LTE-FDD B5 (10MHz)	-99.4dBm	-100dBm	-102.7dBm	-94.3dBm
LTE-FDD B12 (10MHz)	-99.5dBm	-100dBm	-102.5dBm	-93.3dBm
LTE-FDD B13 (10MHz)	-99.2dBm	-100dBm	-102.5dBm	-93.3dBm
LTE-FDD B25 (10MHz)	-97.6dBm	-99dBm	-102.2dBm	-92.8dBm
LTE-FDD B26 (10MHz)	-99.1dBm	-99.9dBm	-102.7dBm	-93.8dBm

6.7. Electrostatic Discharge

The module is not protected against electrostatic discharge (ESD) in general. Consequently, it is subject to ESD handling precautions that typically apply to ESD sensitive components. Proper ESD handling and packaging procedures must be applied throughout the processing, handling and operation of any application that incorporates the module.

The following table shows the module’s electrostatic discharge characteristics.

Table 42: Electrostatic Discharge Characteristics (25ºC, 45% Relative Humidity)

Tested Interfaces	Contact Discharge	Air Discharge	Unit
VBAT, GND	±5	±10	KV
All Antenna Interfaces	±4	±8	KV
Other Interfaces	±0.5	±1	KV

6.8. Thermal Consideration

In order to achieve better performance of the module, it is recommended to comply with the following principles for thermal consideration:

- On customers' PCB design, please keep placement of the module away from heating sources, especially high power components such as ARM processor, audio power amplifier, power supply, etc.
- Do not place components on the opposite side of the PCB area where the module is mounted, in order to facilitate adding of heatsink when necessary.
- Do not apply solder mask on the opposite side of the PCB area where the module is mounted, so as to ensure better heat dissipation performance.
- The reference ground of the area where the module is mounted should be complete, and add ground vias as many as possible for better heat dissipation.
- Make sure the ground pads of the module and PCB are fully connected.
- According to customers' application demands, the heatsink can be mounted on the top of the module, or the opposite side of the PCB area where the module is mounted, or both of them.
- The heatsink should be designed with as many fins as possible to increase heat dissipation area. Meanwhile, a thermal pad with high thermal conductivity should be used between the heatsink and module/PCB.

The following shows two kinds of heatsink designs for reference and customers can choose one or both of them according to their application structure.

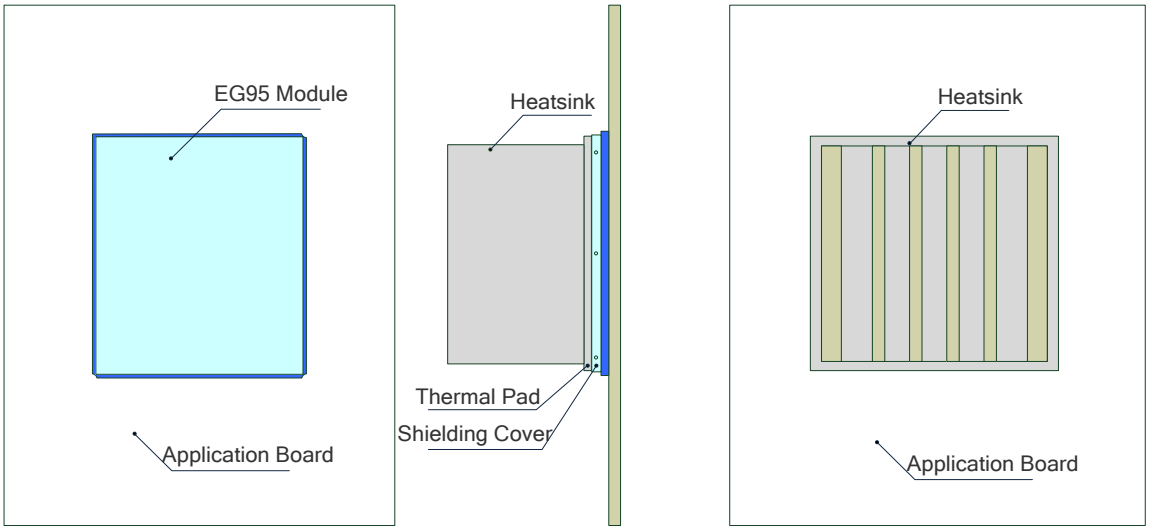

Figure 39: Referenced Heatsink Design (Heatsink at the Top of the Module)

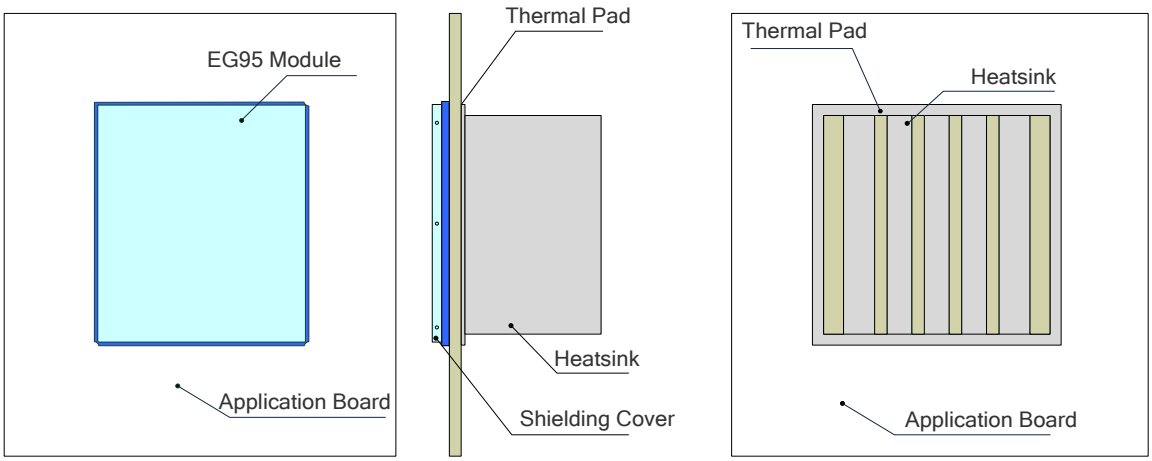

Figure 40: Referenced Heatsink Design (Heatsink at the Backside of Customers' PCB)

NOTES

1. The module offers the best performance when the internal BB chip stays below 105°C. When the maximum temperature of the BB chip reaches or exceeds 105°C, the module works normal but provides reduced performance (such as RF output power, data rate, etc.). When the maximum BB chip temperature reaches or exceeds 115°C, the module will disconnect from the network, and it will recover to network connected state after the maximum temperature falls below 115°C. Therefore, the thermal design should be maximally optimized to make sure the maximum BB chip temperature always maintains below 105°C. Customers can execute **AT+QTEMP** command and get the maximum BB chip temperature from the first returned value.
2. For more detailed guidelines on thermal design, please refer to ***document [6]***.

7 Mechanical Dimensions

This chapter describes the mechanical dimensions of the module. All dimensions are measured in mm, and the dimensional tolerances are ±0.05mm unless otherwise specified.

7.1. Mechanical Dimensions of the Module

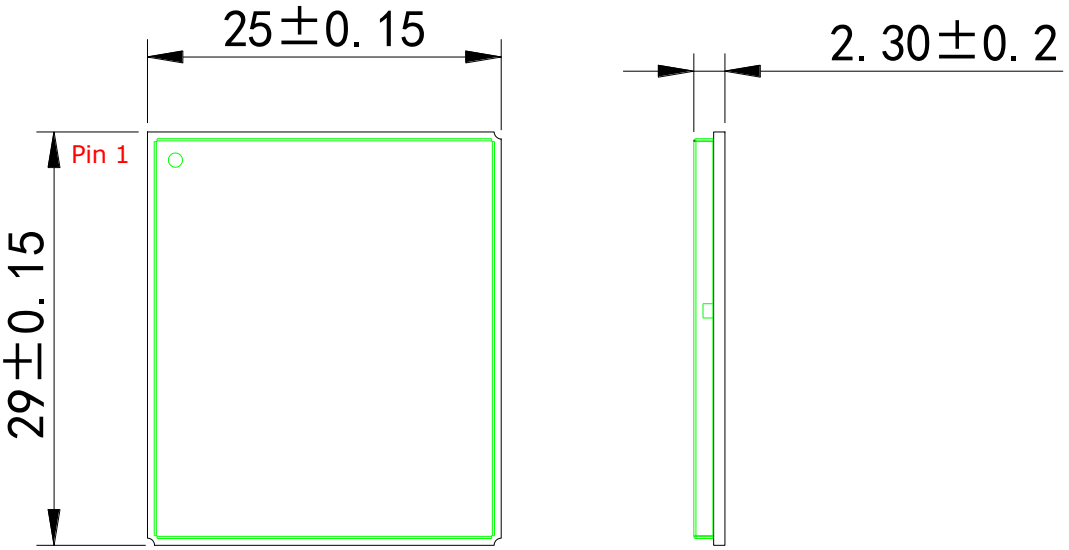

Figure 41: Module Top and Side Dimensions

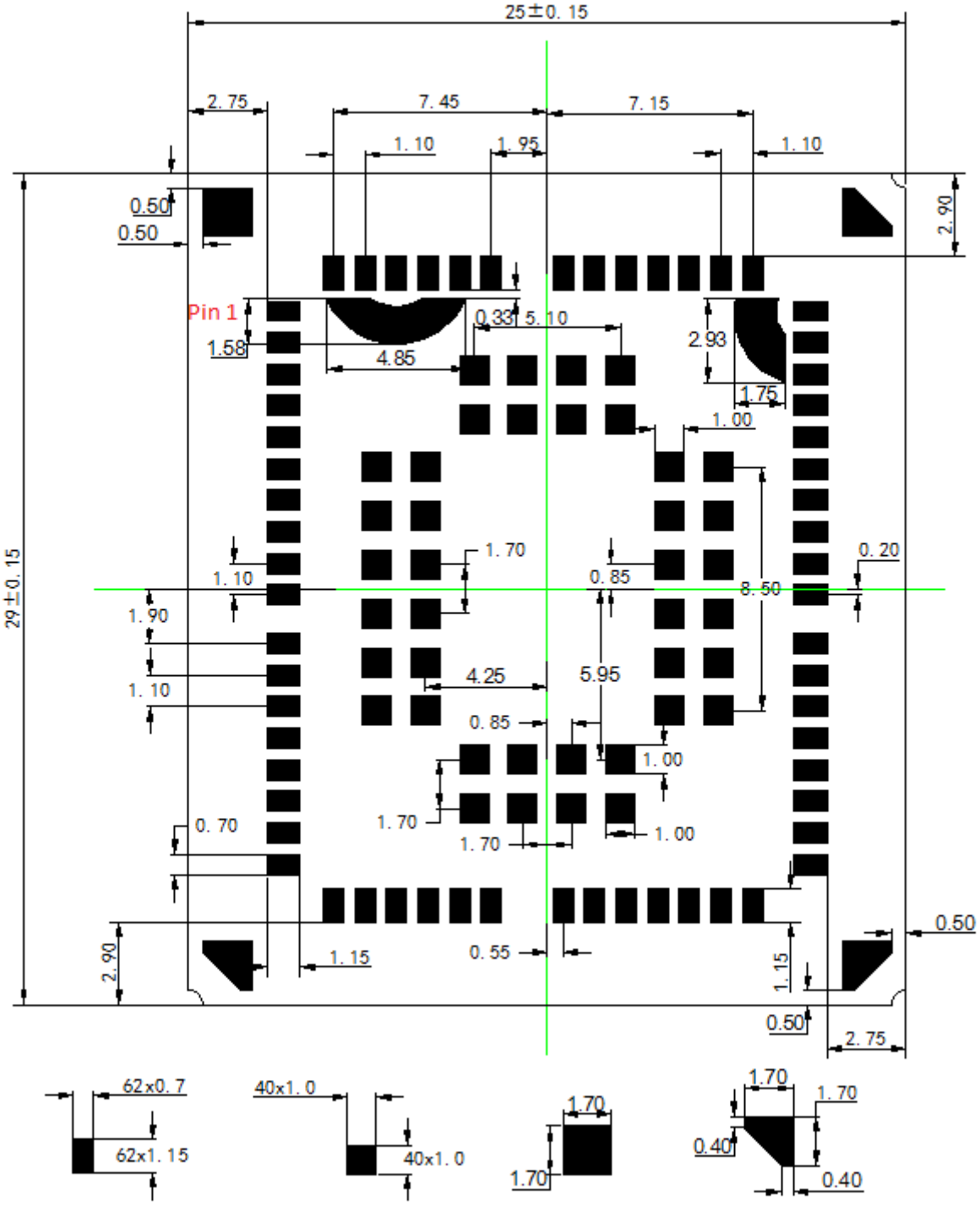

Figure 42: Module Bottom Dimensions (Top View)

7.2. Recommended Footprint

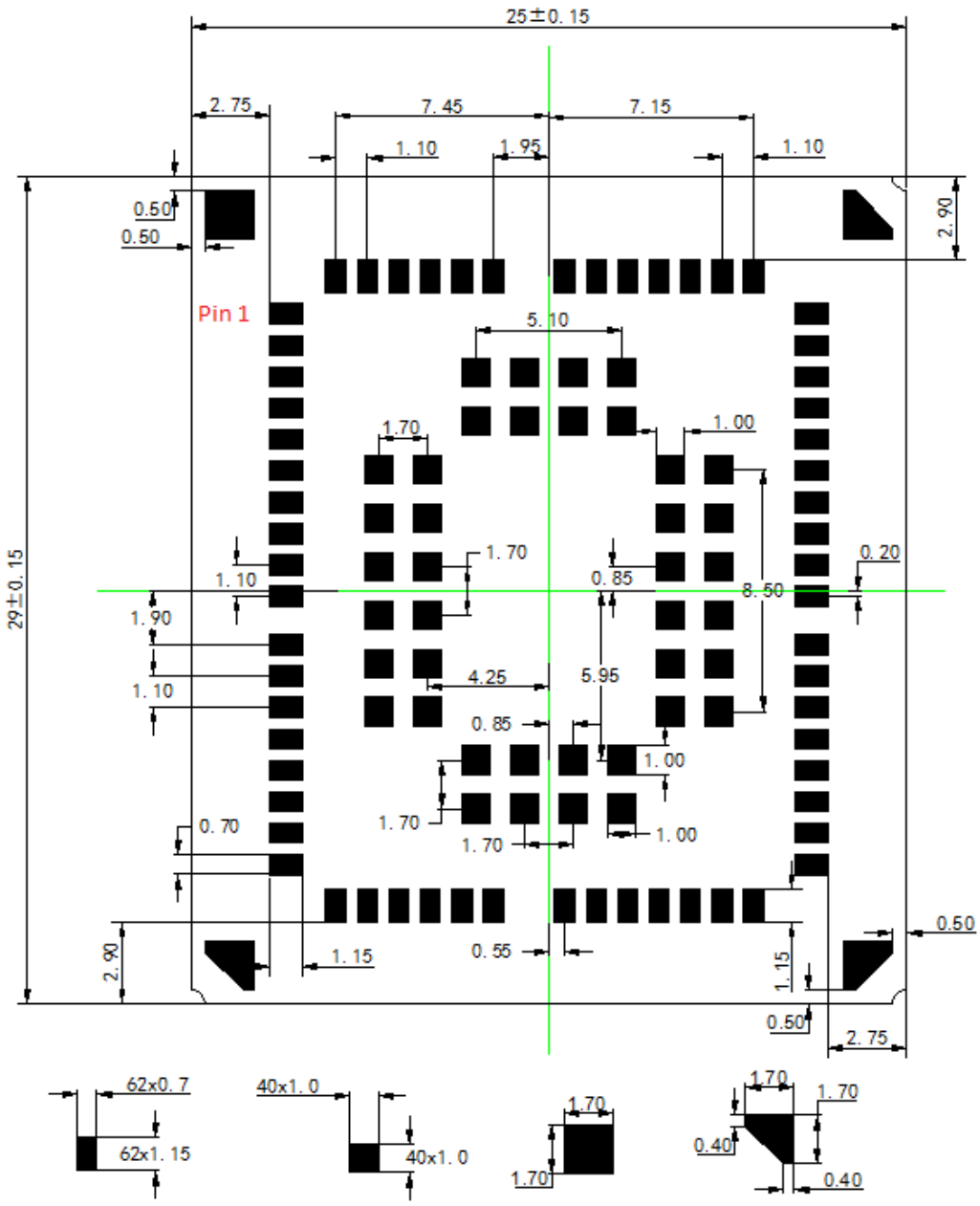

Figure 43: Recommended Footprint (Top View)

NOTE

For easy maintenance of the module, please keep about 3mm between the module and other components in the host PCB.

7.3. Top and Bottom Views of the Module

Figure 44: Top View of the Module

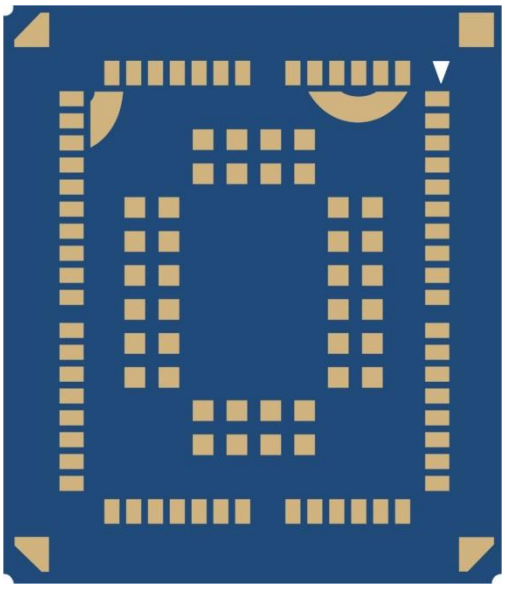

Figure 45: Bottom View of the Module

NOTE

These are renderings of EG95. For authentic appearance, please refer to the module that you receive from

8 Storage, Manufacturing and Packaging

8.1. Storage

EG95 is stored in a vacuum-sealed bag. It is rated at MSL 3, and its storage restrictions are listed below.

1. Shelf life in vacuum-sealed bag: 12 months at <40ºC/90%RH.

2. After the vacuum-sealed bag is opened, devices that will be subjected to reflow soldering or other high temperature processes must be:

   - Mounted within 168 hours at the factory environment of ≤30º C/60%RH.
   - Stored at <10%RH.

3. Devices require baking before mounting, if any circumstances below occurs:

   - When the ambient temperature is 23ºC±5ºC and the humidity indicator card shows the humidity is >10% before opening the vacuum-sealed bag.
   - Device mounting cannot be finished within 168 hours at factory conditions of ⩽30º C/60%RH.

If baking is required, devices may be baked for 8 hours at 120ºC±5ºC.

NOTE

As the plastic package cannot be subjected to high temperature, it should be removed from devices before high temperature (120ºC) baking. If shorter baking time is desired, please refer to *IPC/JEDECJ-STD-033* for baking procedure.

8.2. Manufacturing and Soldering

Push the squeegee to apply the solder paste on the surface of stencil, thus making the paste fill the stencil openings and then penetrate to the PCB. The force on the squeegee should be adjusted properly so as to produce a clean stencil surface on a single pass. To ensure the module soldering quality, the thickness of stencil for the module is recommended to be 0.15mm~0.18mm. For more details, please refer to ***document [4]***.

It is suggested that the peak reflow temperature is 238ºC~245ºC, and the absolute maximum reflow temperature is 245ºC. To avoid damage to the module caused by repeated heating, it is strongly recommended that the module should be mounted after reflow soldering for the other side of PCB has been completed. The recommended reflow soldering thermal profile (lead-free reflow soldering) and related parameters are shown below.

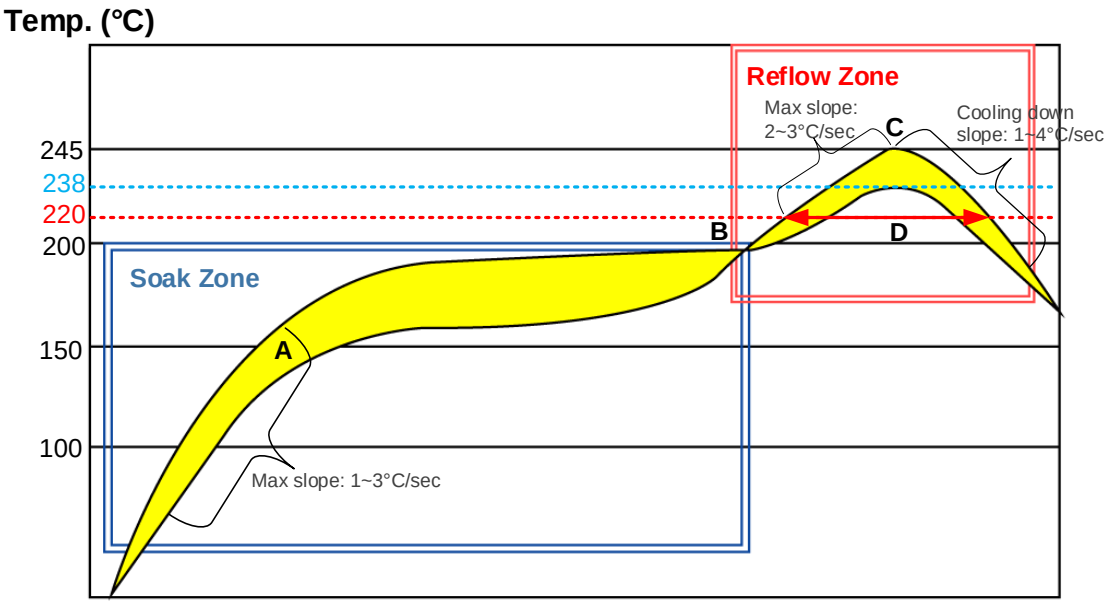

Figure 46: Reflow Soldering Thermal Profile

Table 43: Recommended Thermal Profile Parameters

Factor	Recommendation
Soak Zone	
Max slope	1 ~ 3°C/sec
Soak time (between A and B: 150°C and 200°C)	60 ~ 120 sec
Reflow Zone	

1.1. FCC Certification Requirements.

According to the definition of mobile and fixed device is described in Part 2.1091(b), this device is a mobile device.

And the following conditions must be met:

1. This Modular Approval is limited to OEM installation for mobile and fixed applications only. The antenna installation and operating configurations of this transmitter, including any applicable source-based time- averaging duty factor, antenna gain and cable loss must satisfy MPE categorical Exclusion Requirements of 2.1091.

2. The EUT is a mobile device; maintain at least a 20 cm separation between the EUT and the user's body and must not transmit simultaneously with any other antenna or transmitter.

3. A label with the following statements must be attached to the host end product: This device contains FCC ID: 2AAGEEG95NAX.

4. This module must not transmit simultaneously with any other antenna or transmitter

5. The host end product must include a user manual that clearly defines operating requirements and conditions that must be observed to ensure compliance with current FCC RF exposure guidelines.

For portable devices, in addition to the conditions 3 through 6 described above, a separate approval is required to satisfy the SAR requirements of FCC Part 2.1093

If the device is used for other equipment that separate approval is required for all other operating configurations, including portable configurations with respect to 2.1093 and different antenna configurations.

For this device, OEM integrators must be provided with labeling instructions of finished products. Please refer to KDB784748 D01 v07, section 8. Page 6/7 last two paragraphs:

A certified modular has the option to use a permanently affixed label, or an electronic label. For a permanently affixed label, the module must be labeled with an FCC ID - Section 2.926 (see 2.2 Certification (labeling requirements) above). The OEM manual must provide clear instructions explaining to the OEM the labeling requirements, options and OEM user manual instructions that are required (see next paragraph).

For a host using a certified modular with a standard fixed label, if (1) the module's FCC ID is not visible when installed in the host, or (2) if the host is marketed so that end users do not have straightforward commonly used methods for access to remove the module so that the FCC ID of the module is visible; then an additional permanent label referring to the enclosed module:"Contains Transmitter Module FCC ID: 2AAGEEG95NAX" or "Contains FCC ID: 2AAGEEG95NAX" must be used. The host OEM user manual must also contain clear instructions on how end users can find and/ or access the module and the FCC ID.

The final host / module combination may also need to be evaluated against the FCC Part 15B criteria for unintentional radiators in order to be properly authorized for operation as a Part 15 digital device.

The user's manual or instruction manual for an intentional or unintentional radiator shall caution the user that changes or modifications not expressly approved by the party responsible for compliance could void the user's authority to operate the equipment. In cases where the manual is provided only in a form other than paper, such as on a computer disk or over the Internet, the information required by this section may be

included in the manual in that alternative form, provided the user can reasonably be expected to have the capability to access information in that form.

This device complies with part 15 of the FCC Rules. Operation is subject to the following two conditions: (1) This device may not cause harmful interference, and (2) this device must accept any interference received, including interference that may cause undesired operation.

Changes or modifications not expressly approved by the manufacturer could void the user's authority to operate the equipment.

The devices must be installed and used in strict accordance with the manufacturer's instruction as described in the user documentation that comes with the product.

Any company of the host device which install this modular should perform the test of radiated &condicted emission and spurious emission etc. according to FCC CFR 47 part 22H, FCC CFR 47 part 24E, FCC CFR 47 part 90S, FCC CFR 47 part 2, FCC CFR 47 part 24E, FCC CFR 47 part 27C requirement, only if the test result comply with FCC CFR 47 part 22H, FCC CFR 47 part 24E, FCC CFR 47 part 90S, FCC CFR 47 part 2, FCC CFR 47 part 24E, FCC CFR 47 part 27C requirement. Then the host can be sold legally.

This modular transmitter is only FCC authorized for the specific rule parts (FCC CFR 47 part 22H, FCC CFR 47 part 24E, FCC CFR 47 part 90S, FCC CFR 47 part 2, FCC CFR 47 part 24E, FCC CFR 47 part 27C) listed on the grant, and that the host product manufacturer is responsible for compliance to any other FCC rules that apply to the host not covered by the modular transmitter grant of certification.