MARSHALL IS A TRADEMARK OF MARSHALL AMPLIFICATION PLC. PERMISSION GRANTED. DESIGN OF PRODUCT AND PACKAGING ARE INTELLECTUAL PROPERTIES OF ZOUND INDUSTRIES INTERNATIONAL AB AND MARSHALL AMPLIFICATION PLC. © ALL RIGHTS RESERVED. THE BLUETOOTH® WORD-MARK & LOGOS ARE REGISTERED TRADEMARKS OWNED BY THE BLUETOOTH SIG, INC. AND ANY USE OF SUCH MARKS BY ZOUND INDUSTRIES INTERNATIONAL AB IS UNDER LICENSE. PRODUCED IN CHINA. ZOUND INDUSTRIES INTERNATIONAL AB, CENTRALPLAN 15, 11120 STOCKHOLM, SWEDEN. WWW.MARSHALLHEADPHONES.COM.
FCC: THIS DEVICE COMPLIES WITH PART 15 OF THE FCC RULES. OPERATION IS SUBJECT TO THE FOLLOWING TWO CONDITIONS: (1) THIS DEVICE MAY NOT CAUSE HARMFUL INTERFERENCE AND (2) THIS DEVICE MUST ACCEPT ANY INTERFERENCE RECEIVED, INCLUDING INTERFERENCE THAT MAY CAUSE UNDESIRED OPERATION.
SERVICE PORT
WARNING, DO NOT REMOVE!
ATTENTION, NE PAS RETIRER!
MODEL: KILBURN II
FCC ID: 2AAGF-KILBURNII
IC: 11153A-KILBURNII
CAN ICES-3 (B)/NMB-3 (B)
SERIAL NO
Bluetooth®
100-240 V ~
50/60 Hz
36 W
AUX
Intertek
5002720
CONFORMS TO
ANSI/UL STD. 60065
CERTIFIED TO
CAN/CSA STD. C22.2
No. 60065
CAUTION
RISK OF ELECTRIC SHOCK
DO NOT OPEN
ATTENTION: RISQUE DE CHOC ELECTRIQUE-NE PAS OUVRIR

REV.	Description	By	Date	ECN No.
00	初版发行	Johnny.Hung	2018.05.30	

NOTES:
1. Color: BLACK
2. All sharp corner to be R0.3 unless otherwise specified.
3. Ribs thickness is at bottom and draft angle should be under 0.5.
4. No sink mark, injection mark, flow line and welding line permitted on indicated surface.
5. Eject pin should be located flush or under flush of 0.2mm max.
6. Parting line mismatches and flashes under 0.05mm.
7. Gate trim should be flush or 0.2mm max below surface.
8. The portion we don't point out dimension, please refer to 3d dimension and use common tolerance.(Common tolerance refer to the table unless otherwise specified).
9. (F)are critical to function dimensions (CTF & Cpk) inspection.
10.Specification for warping (concave direction).

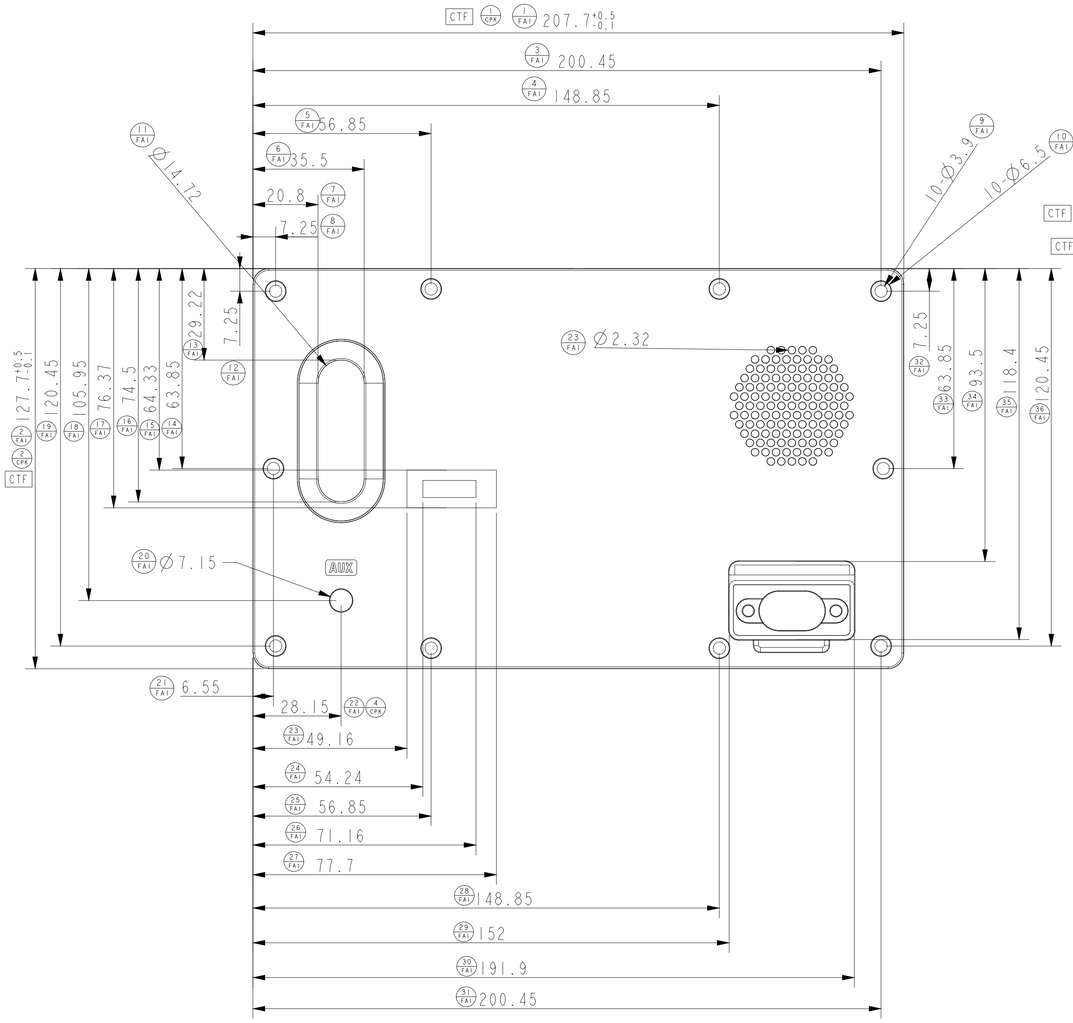

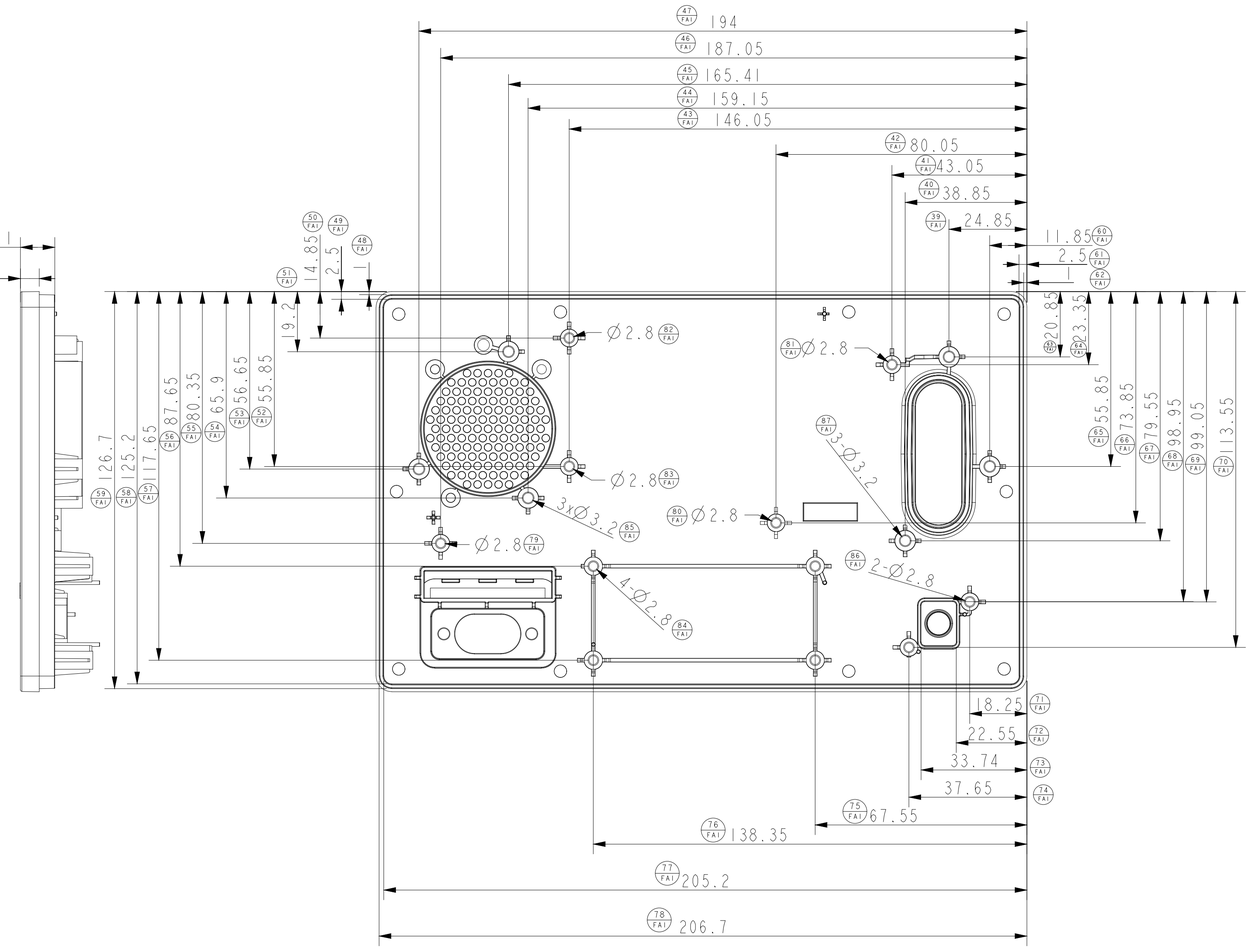

GP Requirement:
1).Lead<90ppm
2).Phthalates(8P)<1000ppm

Note:
1. Parts shall be approved by Tymphany Engineering prior to mass production.
所有零部件都需经声工程师确定后才可生产。
2. (CTF)indicates design-critical dimension, and ◆ indicates customer-controlled dimension. Supplier must establish quality control plan for these dimensions. Customer-controlled dimension cannot be changed without prior customer approval.
有"(CTF)"标识的尺寸为重要管控尺寸(IQC必检)，有"◆"标识的尺寸为客户管控管控尺寸(IQC必检)。
3. Comply with Tymphany QS0057-1031 "Green Product Chemical Substances Specification".
符合QS0057-1031绿色产品化学物质管控规格。
4. Follow customer's specification as required.符合客户要求。
5. Follow Halogen- Free requirement : Br<900 ppm, Cl<900 ppm, Br+Cl< 1500 ppm if required.
有需求时需符合无卤要求：Br<900 ppm, Cl<900 ppm, Br+Cl< 1500 ppm。
6. All dimensions and tolerances indicated on the drawing indicate delivered part dimensions; All dimensions not indicated on the drawing are per 3D model.
未拆部件或产品的尺寸及公差需符合图纸标识，未标识的尺寸请参阅3D。
7. Material(材质): PC+ABS (SOURE EXXV) Weight(重量): 130 ±5% g.
8. Finishing(表面处理): MT-11030
9.Printing need pass cross hatch test

PAGE 1

TYMPHANY	This drawing is the property of Tymphany corporation. It is loaned to the recipient on the express agreement that it will not be reproduced or copied or loaned to another party, nor used for any purpose other than that for which it is expressly loaned. Any review or distribution by others lawfully permitted and purchasers is the full extent of the law.					Tolerance										Cus. Model No.	
						Angular ±0.25°										HENDRIX-M	
Question	Version NO.: V01	Scale: 1:200	Unit: MM			Dimension	F	G	H	J						Tymphany Model No.	T02-379014601
		Sheet: 1/2	Size: A4			0~6	±0.05	±0.1	±0.1	±0.2						Part No.	T100310600100
Sample	Drawn By	Checked By	Approved By			>6~25	±0.08	±0.15	±0.15	±0.3							
						>25~80	±0.12	±0.2	±0.25	±0.4							
Tooling	Johnny.Hung 2018.04.20	CF.Chung 2018.05.01	Steven.Hong 2018.05.03			>80~250	±0.20	±0.3	±0.4	±0.6						DWG No.	T100310600100
						>250~500	±0.5	±0.8	±0.8	±1.0							
Official Issue						>500~2000	±1.0	±1.0	±1.5	±1.7						Part Name.	HENDRIX-M-REAR-COVER
						>2000~	±2.0	±2.0	±3.0	±3.0							

Third Angle Projection

F176-07606

REV.	Description	By	Date	ECN No.
00	模具开行	Johnny.Hung	2018.05.30	

NOTES:
1. Color: BLACK
2. All sharp corner to be R0.3 unless otherwise specified.
3. Ribs thickness is at bottom and draft angle should be under 0.5.
4. No sink mark, injection mark, flow line and welding line permitted on indicated surface.
5. Eject pin should be located flush or under flush of 0.2mm max.
6. Parting line mismatches and flashes under 0.05mm.
7. Gate trim should be flush or 0.2mm max below surface.
8. The portion we don't point out dimension, please refer to 3d dimension and use common tolerance.(Common tolerance refer to the table unless otherwise specified).
9. (F)are critical to function dimensions (CTF & Cpk) inspection.
10.Specification for warping (concave direction).

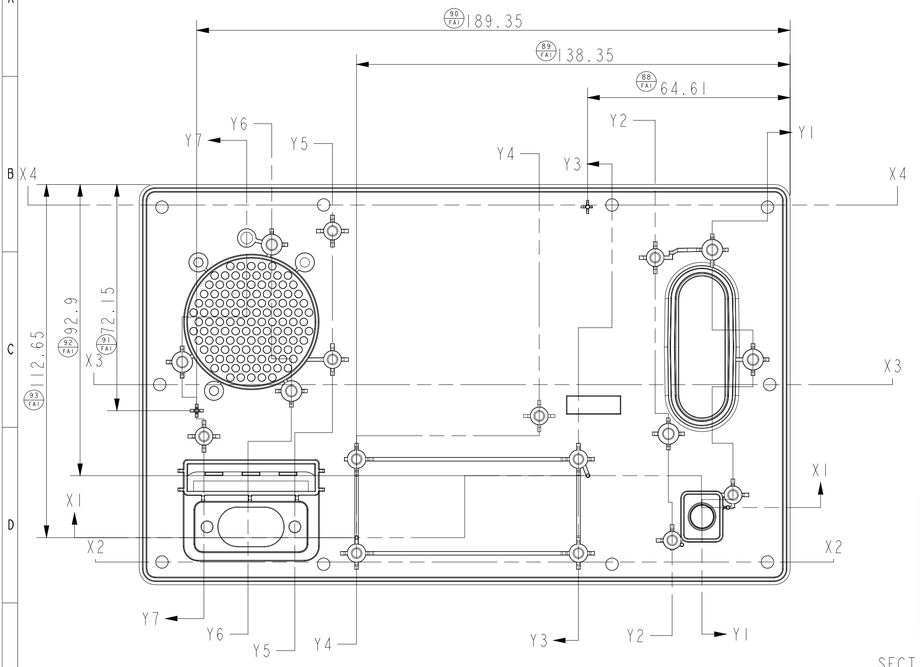

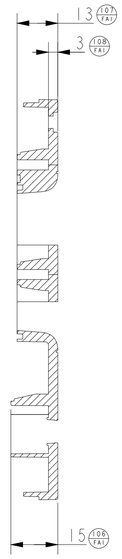

SECTION Y1-Y1

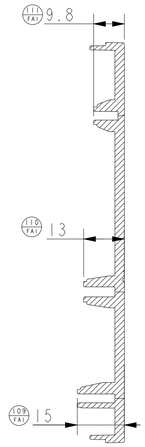

SECTION Y2-Y2

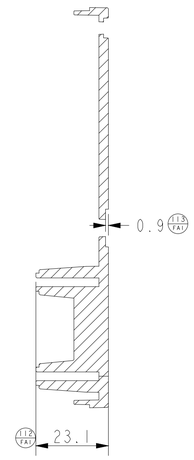

SECTION Y3-Y3

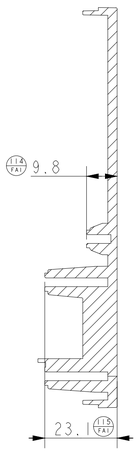

SECTION Y4-Y4

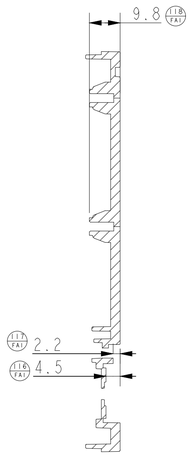

SECTION Y5-Y5

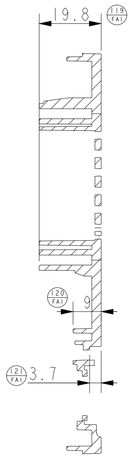

SECTION Y6-Y6

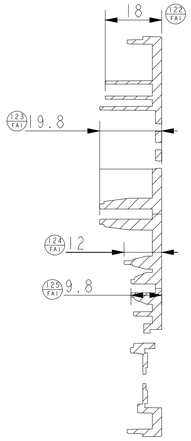

SECTION Y7-Y7

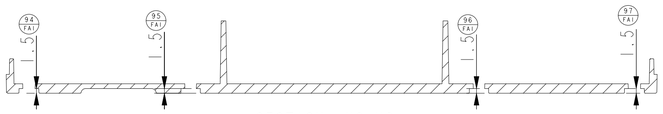

SECTION X2-X2

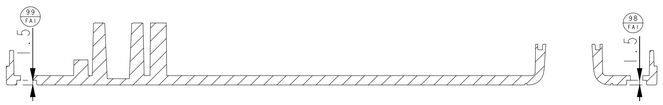

SECTION X3-X3

SECTION X4-X4

SECTION X1-X1

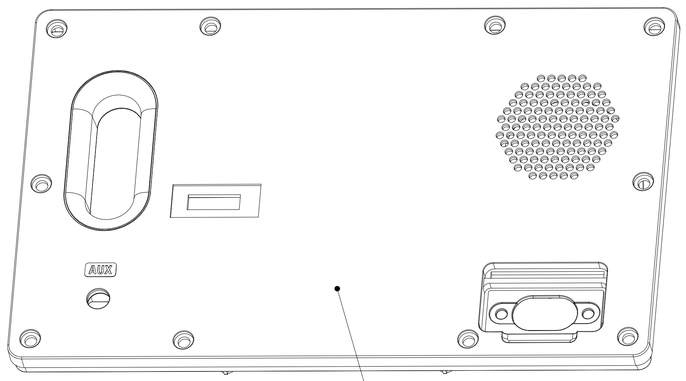

TEXTURE MT-11030
PRINTING CAN`T FUZZY /MISSING WORD CTF
(REFERENCE SAMPLE)

GP Requirement:
1)Lead<90ppm
2)Phthalates(8P)<1000ppm

Note:
1. Parts shall be approved by Tymphany Engineering prior to mass production.
所有零部件都需经声工程师确定后才可生产。
2. (CTF)Indicates design-critical dimension, and ◆ indicates customer-controlled dimension. Supplier must establish quality control plan for these dimensions. Customer-controlled dimension cannot be changed without prior customer approval.
有"(CTF"标识的尺寸为重要管控尺寸(IQC必检)，有"◆"标识的尺寸为客户重要管控尺寸(IQC必检)。
3. Comply with Tymphany QS0057-1031 "Green Product Chemical Substances Specification".
符合QS057-1031绿色产品化学物质管控规范。
4. Follow customer's specification as required.符合客户要求。
5. Follow Halogen- Free requirement : Br<900 ppm, Cl<900 ppm, Br+Cl< 1500 ppm if required.
有需求时需符合无卤要求：Br<900 ppm, Cl<900 ppm, Br+Cl< 1500 ppm。
6. All dimensions and tolerances indicated on the drawing indicate delivered part dimensions; All dimensions not indicated on the drawing are per 3D model.
实际部件成产品的尺寸及公差按符合图纸标识，未标识的尺寸请参照3D。
7. Material(材质): PC/ABS LS5008.V10 / Weight(重量): 128 ±5% g.
8. Finishing(表面处理): MT-11030

TYMPHANY	This drawing is the property of Tymphany corporation. It is loaned for the use of the recipient only. It is not to be copied or used for any purpose other than that for which it is expressly loaned. Any revised or distribution by others is strictly prohibited and punishable to the full extent of the law.			Tolerance							Cus. Model No.	HENDRIX-M
				Angular ±0.25°							Tymphany Model No.	T02-379014601
Question	Version NO.: V01	Scale: 1:200 Sheet: 1/2	UNIT: MM Size: A4	Dimension	F	G	H	J			Part No.	T100310600100
				0~6	±0.05	±0.1	±0.1	±0.2				
Sample	Drawn By	Checked By	Approved By	>6~25	±0.08	±0.15	±0.15	±0.3			DWG No.	T100310600100
				>25~80	±0.12	±0.2	±0.25	±0.4				
Tooling	Johnny.Hung 2018.04.20	CF.Chung 2018.05.01	Steven.Hong 2018.05.03	>80~250	±0.25	±0.3	±0.4	±0.6			Part Name.	HENDRIX-M-REAR-COVER
				>250~400	±0.5	±0.5	±0.6	±1.0				
Official Issue				>400~2000	±1.0	±1.0	±1.5	±1.7				
				>2000~	±2.0	±2.0	±3.0	±3.0				

Third Angle Projection

PAGE 2

F176-07606