Marshall

STOCKWELL - PORTABLE STEREO LOUDSPEAKER

USER MANUAL

WWW.MARSHALLHEADPHONES.COM

IMPORTANT SAFETY INSTRUCTIONS

• Read these instructions – All the safety and operating instructions should be read before this product is operated.
• Keep these instructions – The safety and operating instructions should be retained for future reference.
• Heed all warnings – All warnings on the appliance and in the operating instructions should be adhered to.
• Follow all instructions – All operating and use instructions should be followed.

WARNING!
• WARNING – Do not expose the batteries (battery pack or batteries installed) to excessive heat such as sunshine, fire or the like for a long time.
• WARNING – To reduce the risk of fire or electric shock, do not expose this apparatus to rain or moisture. The apparatus shall not be exposed to dripping or splashing and that objects filled with liquids, such as vases, shall not be placed on apparatus.
• WARNING – do not cover.
• WARNING – only use attachments/accessories specified by the manufacturer (such as the exclusive supply adapter, battery etc).
• WARNING – the plug is the main disconnect device and should be used as such. The disconnect device should remain readily accessible.
• WARNING – this active loudspeaker may emit high sound pressure levels.
• WARNING – do not listen too close to the active loudspeaker.
• WARNING – do not listen for an extended period of time at a high sound pressure level.
• WARNING – do not attempt to remove the active loudspeaker chassis, there are no user serviceable parts.
• WARNING – do not plug a guitar into the Stockwell.
• WARNING – do not insert body parts or objects into the bass port for risk of injury.
• DANGER – of dropping the product.
• DANGER – of sharp corners.

MOISTURE AND HUMIDITY
• The active loudspeaker should be located in a place free from moisture and water.
• Do not use this apparatus near water. Do not expose it to rain or dripping water. Do not splash water on it.

INSTALLATION
• Do not install near any heat sources such as radiators, heat registers, stoves, or other apparatus (including amplifiers) that produce heat.
• No naked flame sources, such as lit candles, should be placed on the active loudspeaker.
• Do not block any ventilation openings. Install in accordance with the manufacturer's instructions.

CONNECTION
• Connect the active loudspeaker according to the instructions in the manual.
• Connect the active loudspeaker only to the correct mains voltage as shown on the equipment.
• Protect the power cord from being walked on or pinched particularly at plugs, convenience receptacles, and the point where they exit the apparatus.
• Use only power cables of the type specified in the operating instructions or as marked on the active loudspeaker. Do not substitute the separate power cable included with this active loudspeaker with any other power supply – use only the power cable provided by the manufacturer.
• Do not defeat the safety purpose of the polarized or grounding-type plug. A polarized plug has two blades with one wider than the other. A grounding plug has two blades and a third grounding prong. The wide blade or the third prong are provided for your safety. If the provided plug does not fit into your outlet, consult an electrician for replacement of the obsolete outlet.
• Unplug this apparatus during lightning storms or when unused for long periods of time.
• Do not install in an area that impedes access to the power plug. Disconnecting the power plug is the only way to completely remove power to the product and the plug must be readily accessible at all times.

CLEANING
• Clean only with dry cloth.

MAINTENANCE
• Refer all servicing to qualified service personnel. Servicing is required when the apparatus has been damaged in any way, such as power-supply cord or plug is damaged, liquid has been spilled or objects have fallen into the apparatus, the apparatus has been exposed to rain or moisture, does not operate normally, or has been dropped.
• The internal battery is user replaceable according to the instructions in this manual. Only use batteries recommended by Zound Industries and intended for the Stockwell active loudspeaker.
• CAUTION: These servicing instructions are for use by qualified service personnel only. To reduce the risk of electric shock, do not perform any servicing unless you are qualified to do so.

COMPLIANCE MARKS

CAUTION: To prevent the risk of electric shock, do not remove cover (or back plate). There are no user serviceable parts inside. Refer servicing to qualified service personnel.

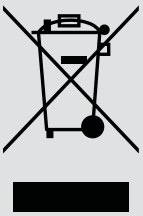

This appliance may not be treated as regular household waste. Management of WEEE (Waste Electrical and Electronic Equipment) is applicable in member states of the European Union and other European countries with individual national policies on the management of WEEE. If you need more information on the collection, reuse and recycling systems, please contact your local or regional waste administration facility.

This product conforms to ANSI/UL Std. 60065 and is Certified to CAN/CSA Std. C22.2 No. 60065.

The product complies with the following European directives: the electromagnetic compatibility directive 2014/30/EU. The low voltage directive 2006/95/EC.

Use only power supplies listed in the user manual/ user instrustion.
Switching Power Supply Model:GQ30-150180-AX
Made By:Dongguan Gangqi Electronic Co.,Ltd

FCC Statement

This equipment has been tested and found to comply with the limits for a Class B digital device, pursuant to Part 15 of the FCC Rules. These limits are designed to provide reasonable protection against harmful interference in a residential installation. This equipment generates uses and can radiate radio frequency energy and, if not installed and used in accordance with the instructions, may cause harmful interference to radio communications. However, there is no guarantee that interference will not occur in a particular installation. If this equipment does cause harmful interference to radio or television reception, which can be determined by turning the equipment off and on, the user is encouraged to try to correct the interference by one or more of the following measures:

-- Reorient or relocate the receiving antenna.

-- Increase the separation between the equipment and receiver.

WWW.MARSHALLHEADPHONES.COM

Zound Industries International AB, Centralplan 15, 111 20 Stockholm, Sweden

COMPLIANCE MARKS

-- Connect the equipment into an outlet on a circuit different from that to which the receiver is connected.
-- Consult the dealer or an experienced radio/TV technician for help.

This device complies with part 15 of the FCC Rules. Operation is subject to the following two conditions: (1) This device may not cause harmful interference, and (2) this device must accept any interference received, including interference may cause undesired operation.

Changes or modifications not expressly approved by the party responsible for compliance could void the user's authority to operate the equipment.

IC Statement

This device complies with Industry Canada's licence-exempt RSSs. Operation is subject to the following two conditions:
(1) This device may not cause interference; and(2) This device must accept any interference, including interference that may cause undesired operation of the device.

Le présent appareil est conforme aux CNR d'Industrie Canada applicables aux appareils radio exempts de licence. L'exploitation est autorisée aux deux conditions suivantes : (1) l'appareil ne doit pas produire de brouillage, et (2) l'utilisateur de l'appareil doit accepter tout brouillage radioélectrique subi, même si le brouillage est susceptible d'en compromettre le fonctionnement.

The content of this document is for information purposes only. Zound Industries reserves the right to change information without prior notifications and at any time.

Hereby, Zound Industries International AB, declares that this [insert product info] is in compli ance with the essential requirements and other relevant provisions of Directive [please insert the correct directives - meaning the directives referred to in the declaration]. For the declaration of conformity, visit this website: www.zoundindustries.com

WWW.MARSHALLHEADPHONES.COM

Zound Industries International AB, Centralplan 15, 111 20 Stockholm, Sweden

-

INDEX

ENGLISH

SECTIONS

PAGE

002. IMPORTANT SAFETY INSTRUCTIONS
003. COMPLIANCE MARKS
005. LANGUAGE INDEX
006. BOX CONTENTS
007. DEVICE LAYOUT
008. CHANGING THE POWER ADAPTER PLUG
009. PLUGGING IN AND CHARGING THE STOCKWELL
011. TURNING THE POWER ON/OFF
012. USING THE STOCKWELL WITH YOUR DEVICES
014. CONNECTING VIA BLUETOOTH (PAIRING)
016. BLUETOOTH AUTO CONNECTION
017. CONNECTING SOUND SOURCE BY CABLE
019. CHOOSING YOUR SOURCE
020. USING THE STOCKWELL IN SPEAKER PHONE MODE
021. ADJUSTING THE SOUND
023. REPLACING THE INTERNAL BATTERY
025. USING THE FLIP COVER (OPTIONAL)
027. REMOVING THE FLIP COVER (OPTIONAL)
029. TECHNICAL INFORMATION
030. TROUBLE SHOOTING

LANGUAGE INDEX

FRENCH - FRANÇAIS
PAGE 032

TRADITIONAL CHINESE - 繁體中文
PAGE 224

JAPANESE - 日本語
PAGE 064

FINNISH - SUOMI
PAGE 225

GERMAN - DEUTSCH
PAGE 096

RUSSIAN - РУССКИЙ
PAGE 288

SPANISH - ESPAÑOL
PAGE 128

DUTCH - NEDERLANDS
PAGE 320

ITALIAN - ITALIANO
PAGE 160

PORTUGUESE - PORTUGUÊS
PAGE 352

SIMPLIFIED CHINESE - 简体中文
PAGE 192

BOX CONTENTS

001. POWER ADAPTER WITH A CORD AND REGION SPECIFIC PLUGS
002. DOUBLE-ENDED COIL CORD WITH 3.5MM STEREO PLUGS TO CONNECT TO YOUR MUSIC PLAYER
003. QUICK START USER MANUAL AND SAFETY INFORMATION
004. MARSHALL STOCKWELL ACTIVE STEREO LOUDSPEAKER
005. MARSHALL FOLDABLE FLIP COVER (OPTIONAL)

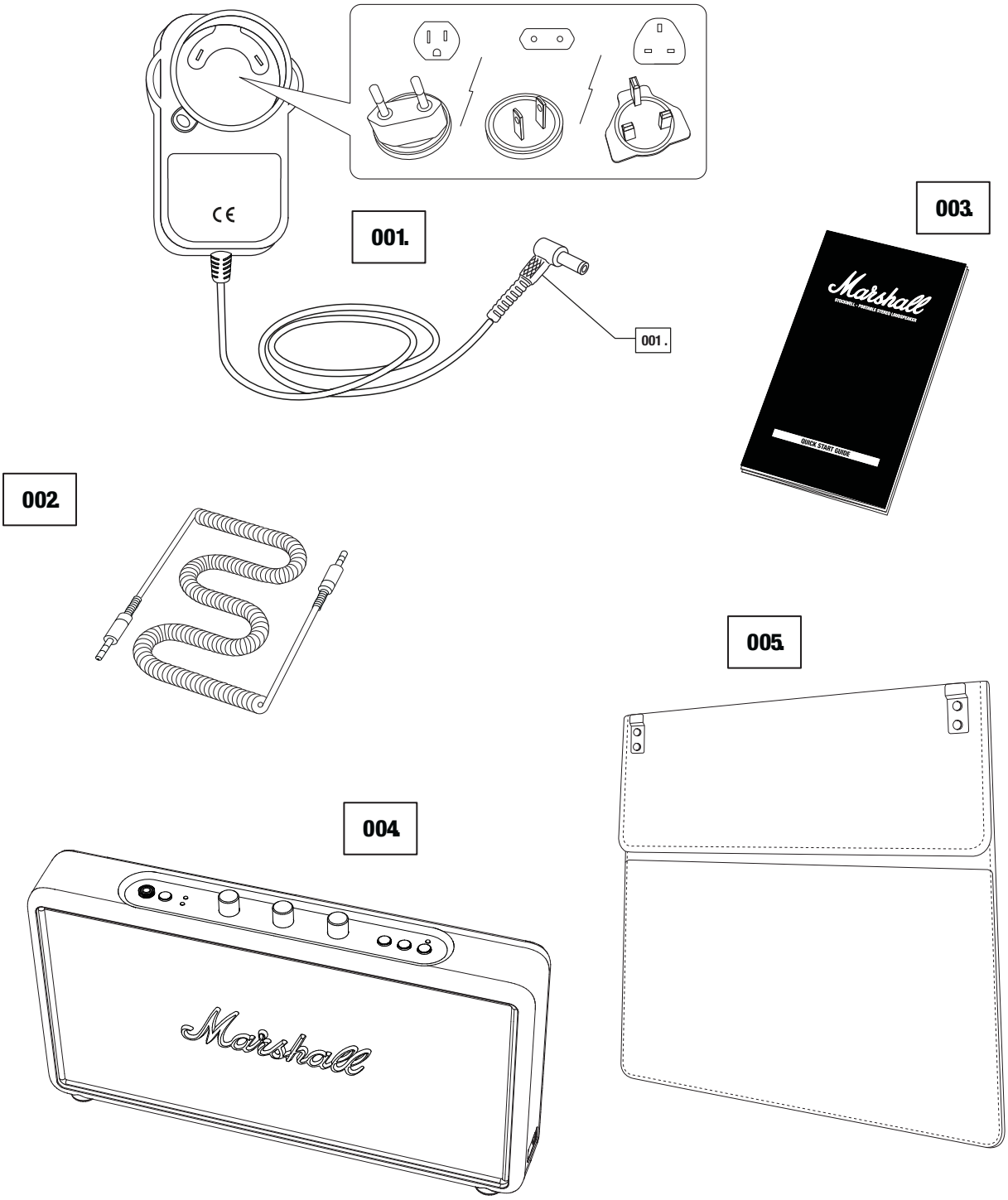

DEVICE LAYOUT

001. INPUT FOR 3.5MM STEREO PLUG
002. SOURCE BUTTON
003. SOURCE INDICATORS
004. VOLUME KNOB
005. BASS KNOB
006. TREBLE KNOB
007. PHONE BUTTON
008. PAIR BUTTON
009. POWER BUTTON
010. ON/OFF INDICATOR

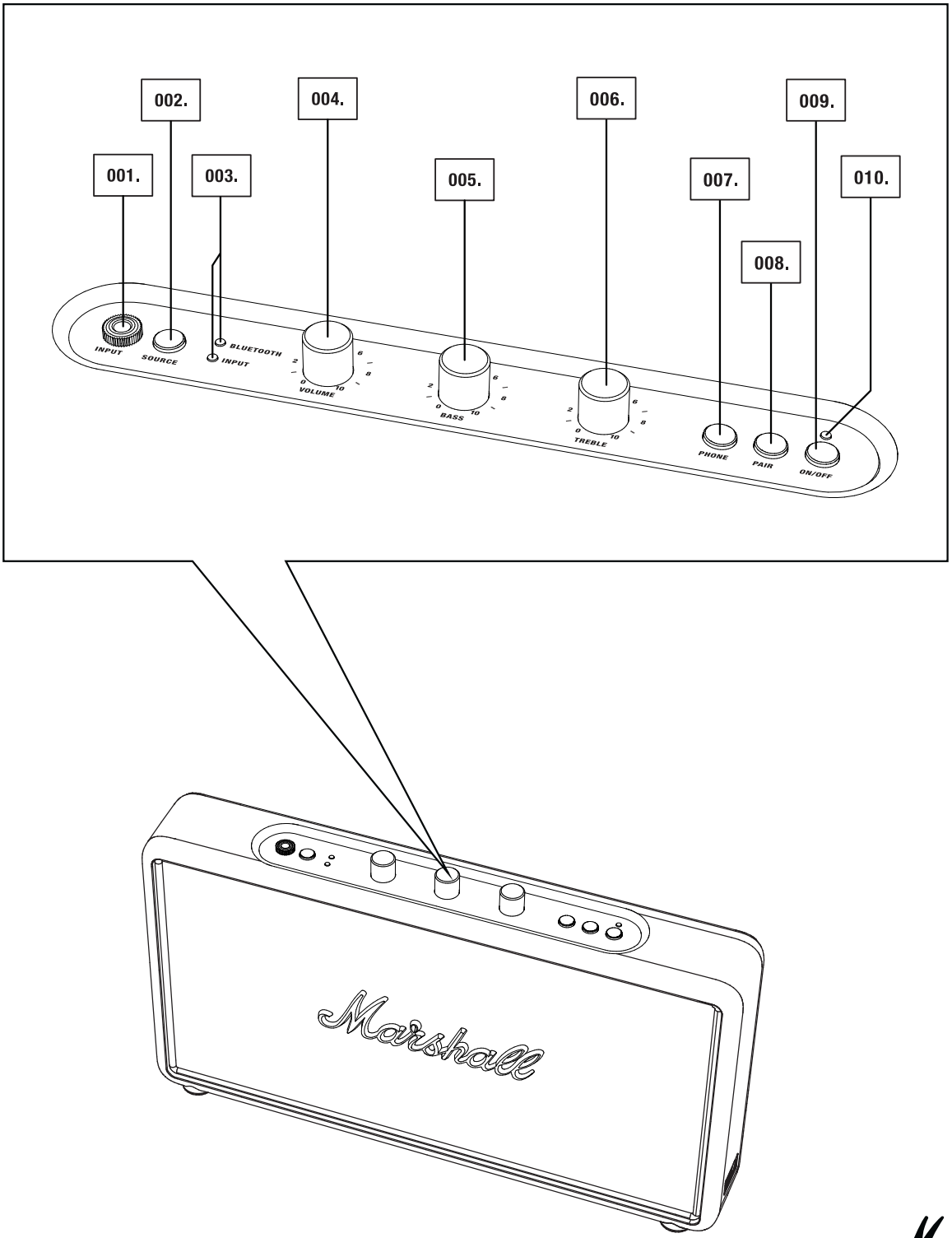

CHANGING THE POWER ADAPTER PLUG

THE INCLUDED 15V POWER ADAPTER COMES WITH THREE INTERCHANGEABLE PLUGS (US/EU/UK). BEFORE USING THE STOCKWELL, ENSURE THAT THE CORRECT PLUG FOR YOUR REGION IS INSTALLED.

001. PUSH AND HOLD THE BUTTON NEXT TO THE PLUG WHILE TURNING THE PLUG SLIGHTLY ANTICLOCKWISE.
002. REMOVE THE PLUG.
003. INSTALL THE CORRECT PLUG BY INSERTING IT SLIGHTLY TURNED CLOCKWISE.
004. TURN THE PLUG CLOCKWISE UNTIL YOU HEAR A CLICK.

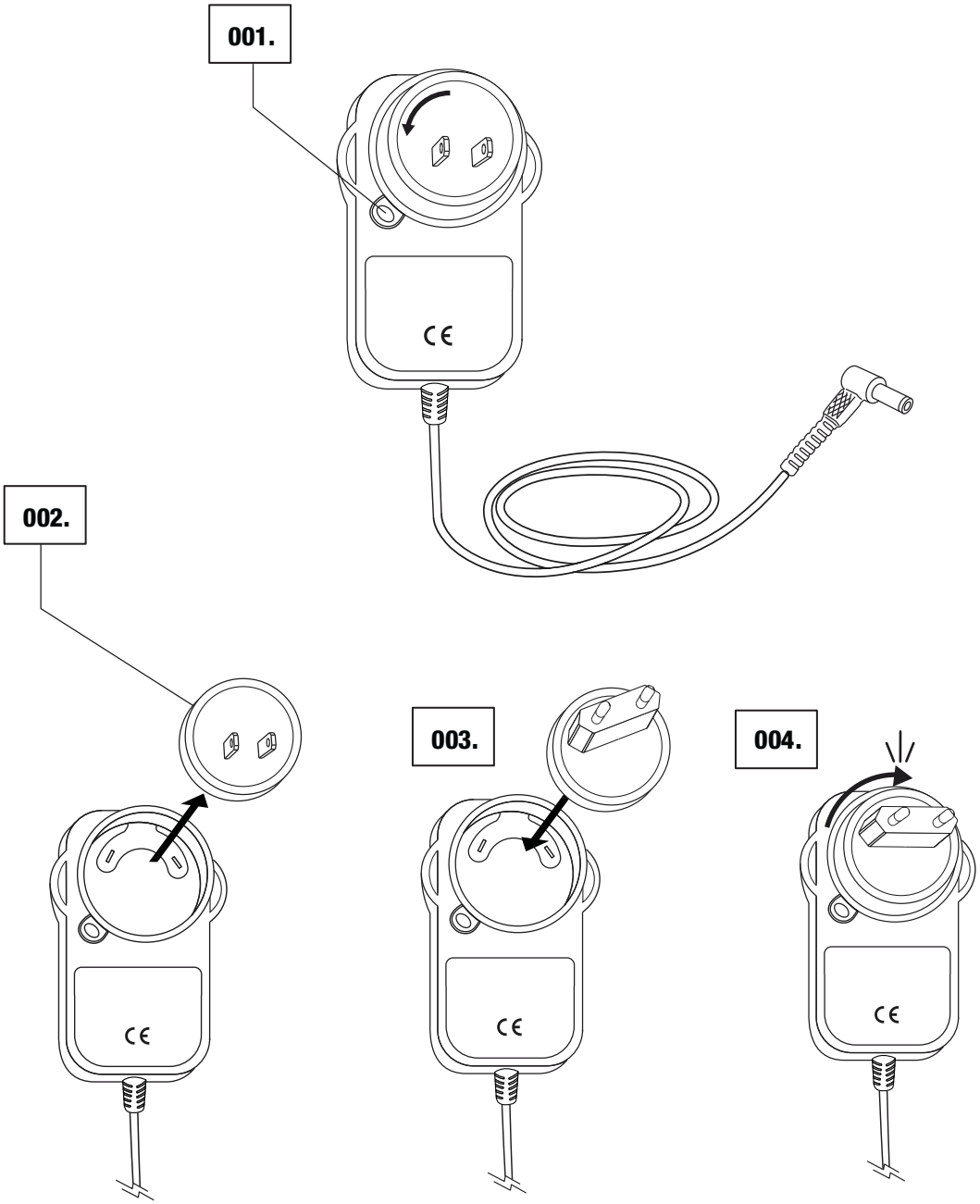

PLUGGING IN AND CHARGING THE STOCKWELL

THE STOCKWELL IS EQUIPPED WITH AN INTERNAL BATTERY SUPPORTING A PLAYING TIME FOR UP TO 25 HOURS AT MID VOLUME. THE BATTERY IS RECHARGEABLE AND CAN BE FULLY CHARGED IN 3 HOURS, WHEN COMPLETELY DISCHARGED.

IF THE RED ON/OFF INDICATOR STARTS TO FLASH WHEN THE STOCKWELL IS ON BATTERY POWER, THE BATTERY HAS LESS THAN 25% CHARGE LEFT.

001. INSERT THE POWER CORD INTO THE 15V POWER SOCKET ON THE LEFT HAND SIDE OF THE STOCKWELL.

002. CONNECT THE POWER ADAPTER TO THE WALL SOCKET.

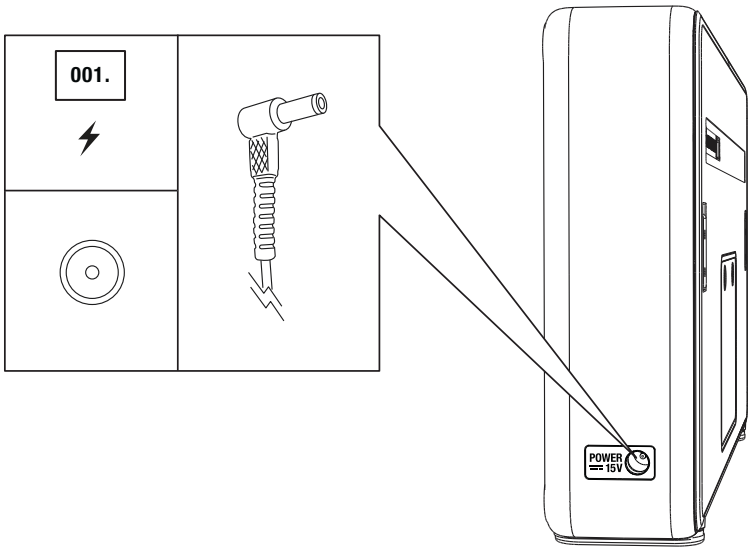

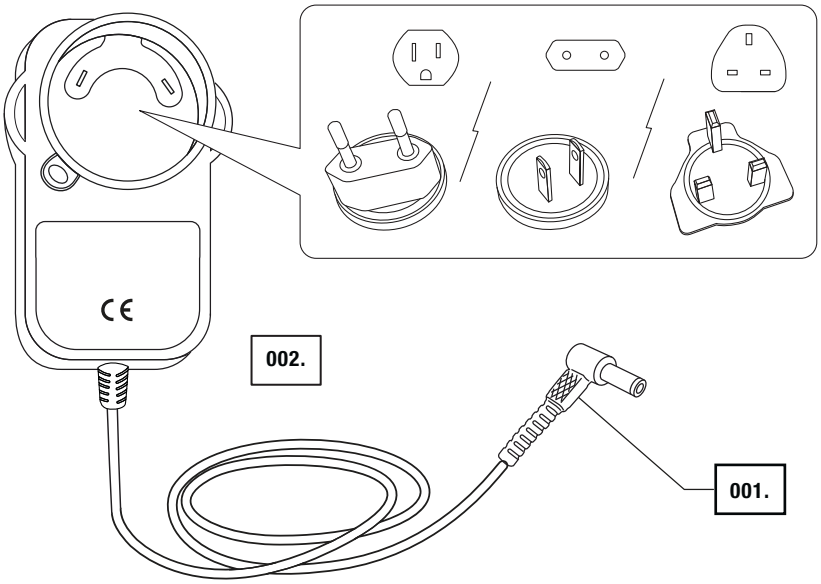

PLUGGING IN AND CHARGING THE STOCKWELL

001. THE RED ON/OFF INDICATOR FLASHES WHEN THE BATTERY IS CHARGING.
002. THE RED ON/OFF INDICATOR STAYS LIT WHEN CHARGING IS DONE.

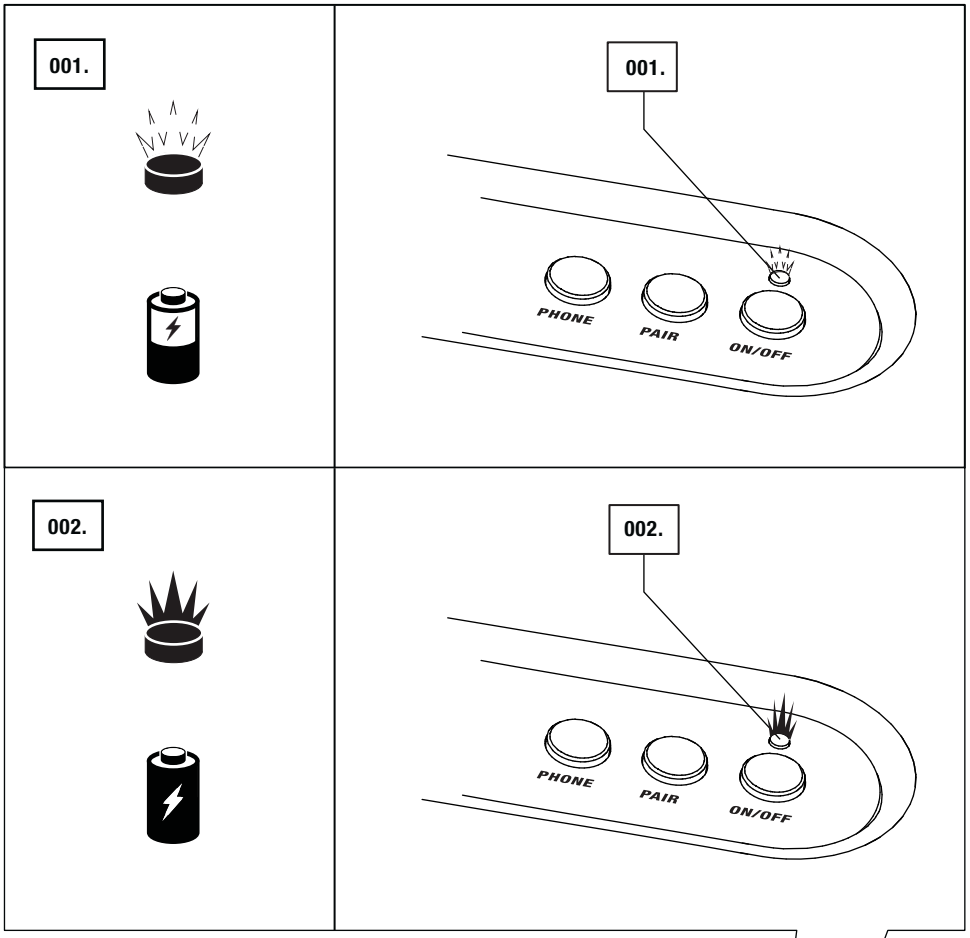

NOTE: THE SPEAKER CAN BE USED WHILE CHARGING THE BATTERY.

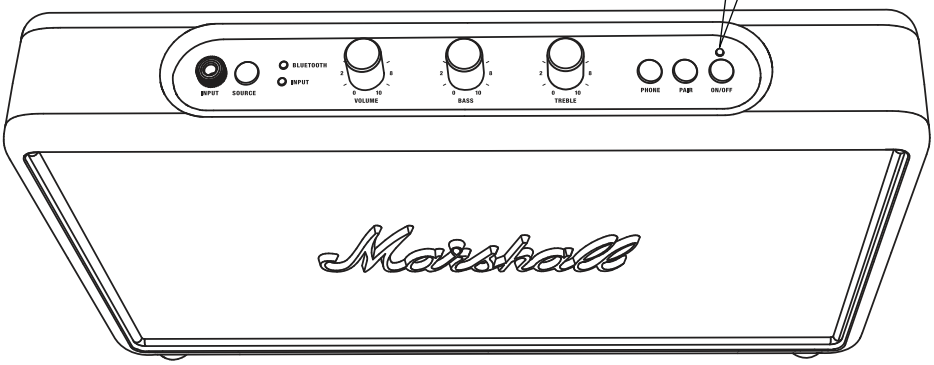

TURNING THE POWER ON/OFF

001. PUSH AND HOLD POWER BUTTON FOR 1 SECOND TO TURN ON THE SPEAKER.
002. THE RED ON/OFF INDICATOR ON TOP PANEL LIGHTS UP.
003. PUSH AND HOLD THE POWER BUTTON FOR 3 SECONDS TO TURN OFF THE SPEAKER.
004. THE RED ON/OFF INDICATOR ON TOP PANEL GOES OFF.

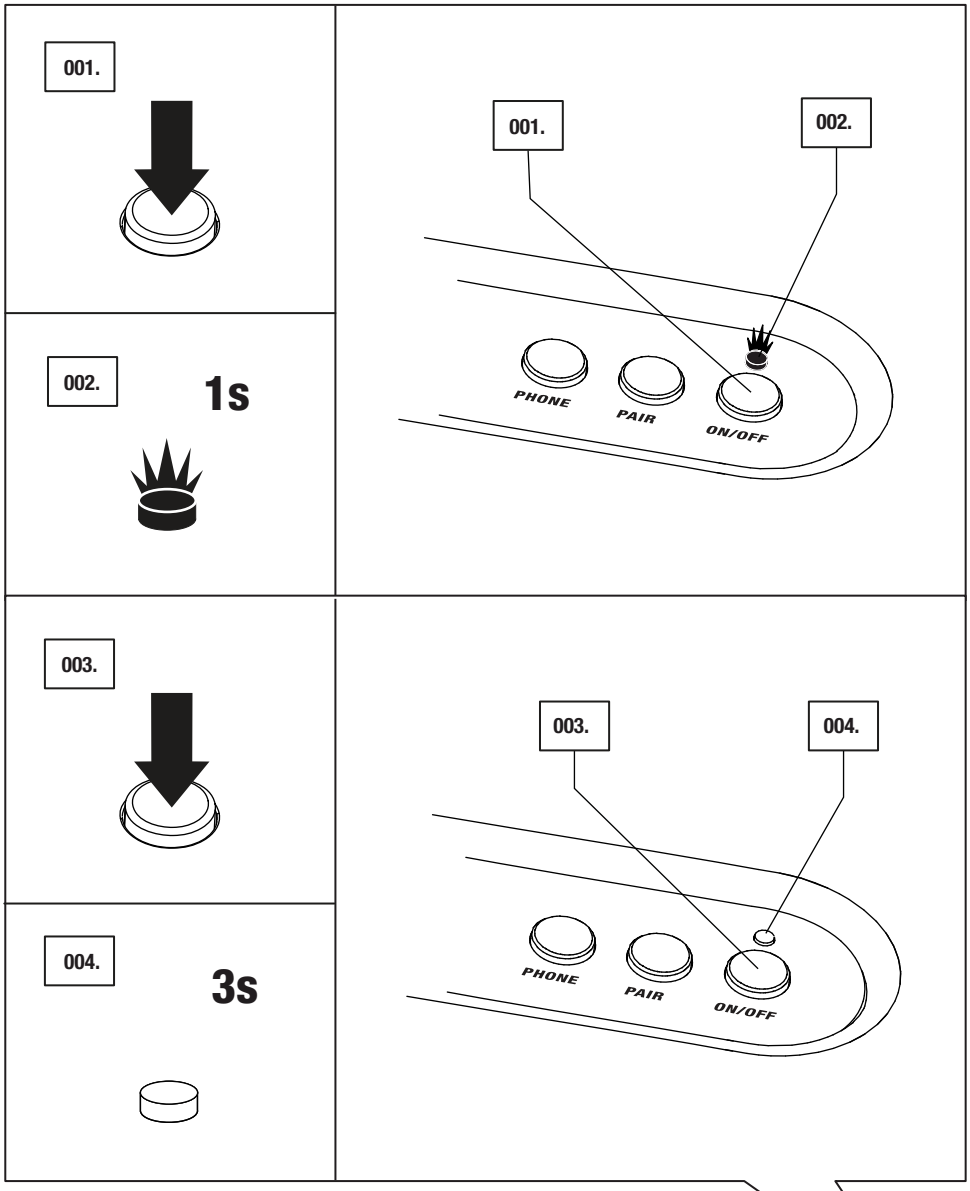

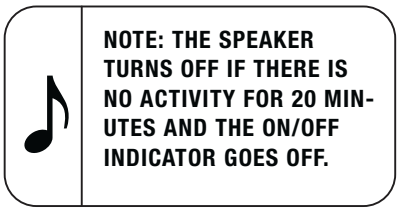

NOTE: THE SPEAKER TURNS OFF IF THERE IS NO ACTIVITY FOR 20 MINUTES AND THE ON/OFF INDICATOR GOES OFF.

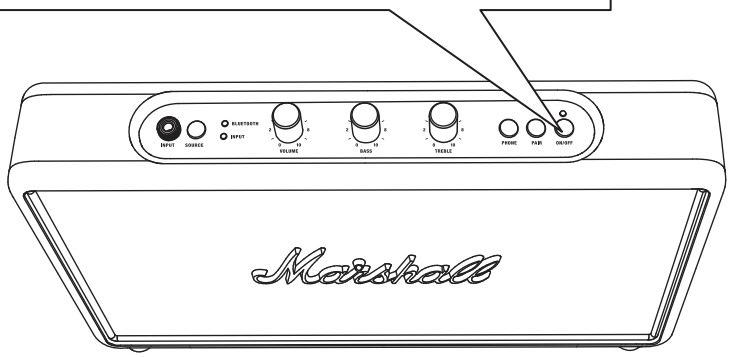

USING THE STOCKWELL WITH YOUR DEVICES

THERE ARE TWO WAYS TO CONNECT YOUR PHONE, TABLET, LAPTOP TO YOUR SPEAKER, WHETHER USING A PHYSICAL CORD OR VIA WIRELESS BLUETOOTH®. BELOW YOU WILL FIND MORE DETAILS ABOUT THE CONNECTION SOURCES, IN TWO CATEGORIES:

- **WIRELESS CONNECTION VIA BLUETOOTH (SPEAKER PHONE MODE)**
- **CONNECTION VIA THE 3.5MM STEREO PLUG**

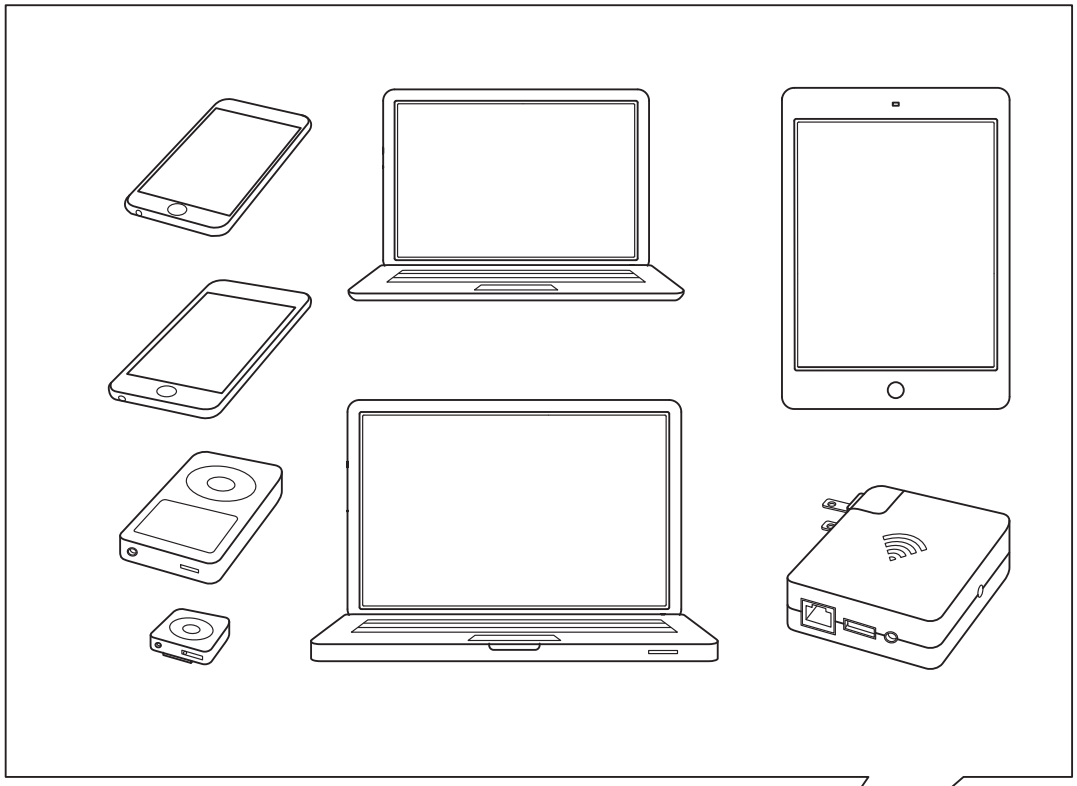

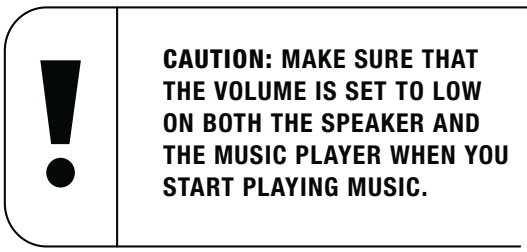

CAUTION: MAKE SURE THAT THE VOLUME IS SET TO LOW ON BOTH THE SPEAKER AND THE MUSIC PLAYER WHEN YOU START PLAYING MUSIC.

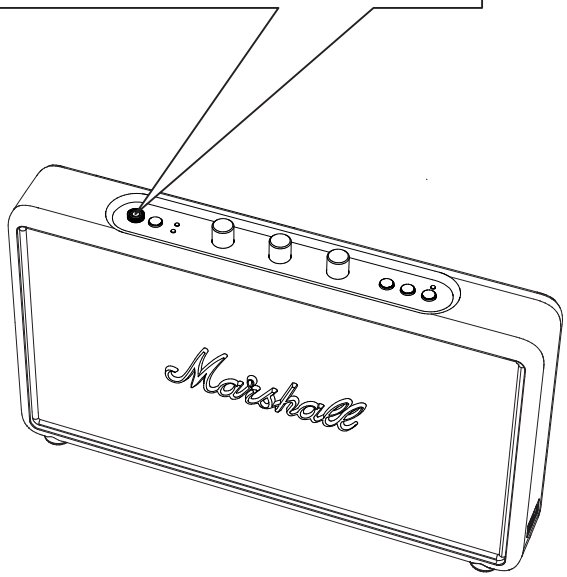

USING THE STOCKWELL WITH YOUR DEVICES

THE STOCKWELL HAS A USB POWER OUTPUT SOCKET ON THE BACK. YOU CAN PLUG IN AND CHARGE YOUR USB CHARGEABLE DEVICE. THE STOCKWELL WILL POWER YOUR USB DEVICE EVEN THOUGH IT IS PLAYING MUSIC AND RUNNING ON BATTERY POWER.

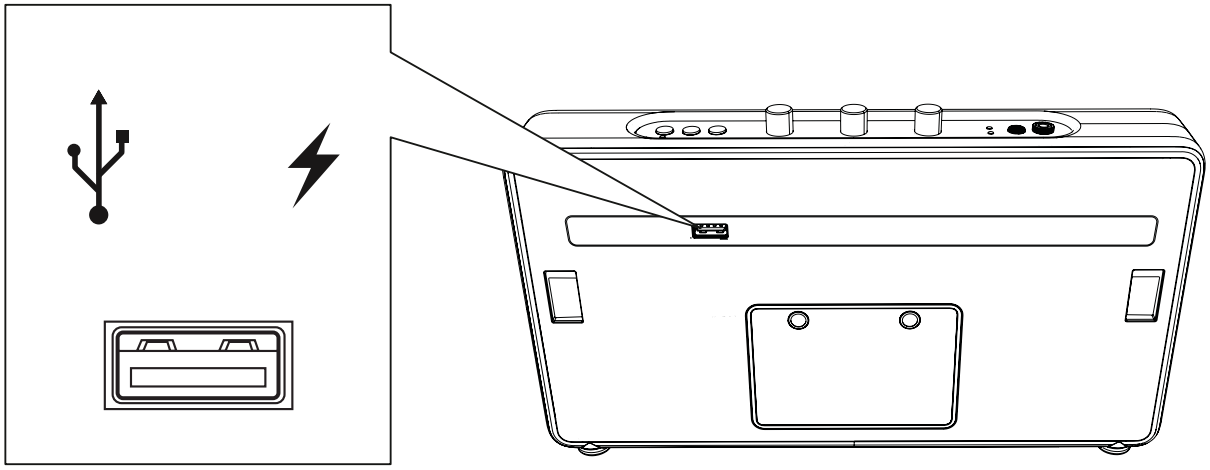

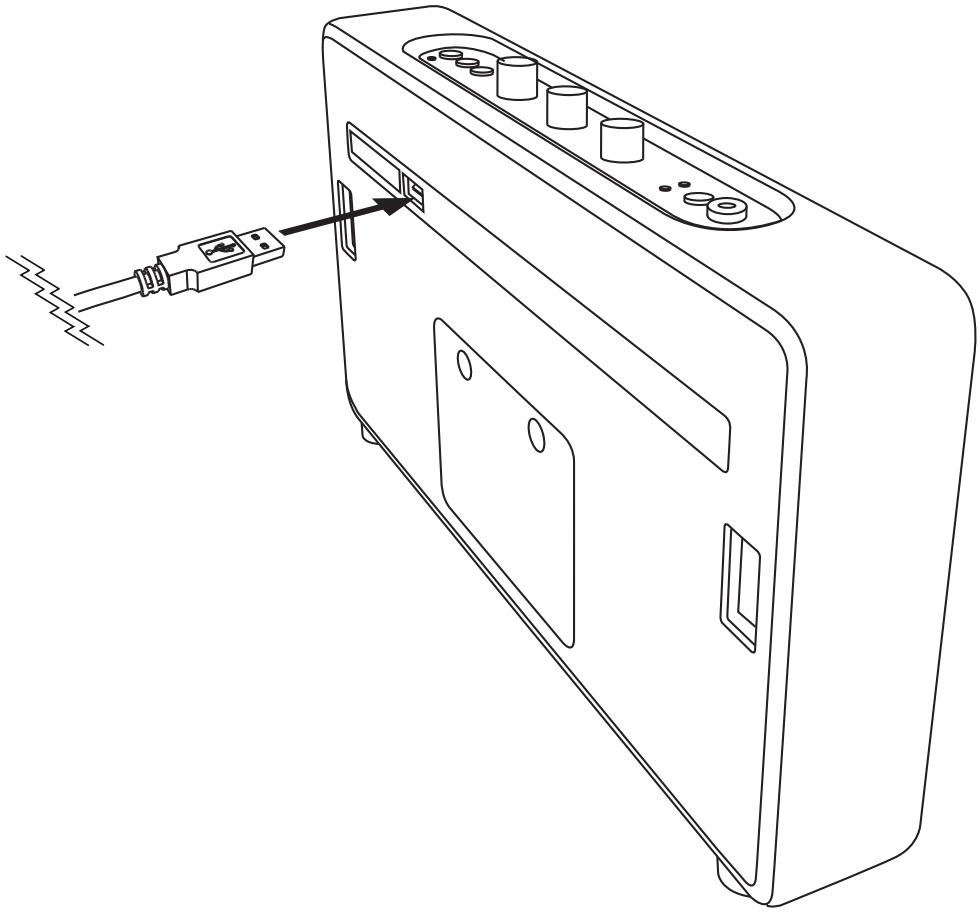

CONNECTING VIA BLUETOOTH (PAIRING)

WITH THE HELP OF BLUETOOTH TECHNOLOGY YOU CAN EASILY CONNECT YOUR BLUETOOTH-COMPATIBLE DEVICES TO THE STOCKWELL OVER A SHORT RANGE WIRELESS CONNECTION. THIS ALLOWS YOU TO USE THE STOCKWELL AS A SPEAKER PHONE WITH YOUR BLUETOOTH-ENABLED SMARTPHONE OR CONNECT IT WITH A TABLET OR COMPUTER AND STREAM MUSIC DIRECTLY TO IT.

FOLLOW THESE STEPS TO PAIR THE STOCKWELL WIRELESSLY TO YOUR BLUETOOTH DEVICE.

001. ENSURE THAT THE STOCKWELL IS POWERED ON.
002. PUSH THE PAIR BUTTON.
003. THE RED BLUETOOTH INDICATOR STARTS TO FLASH RAPIDLY.

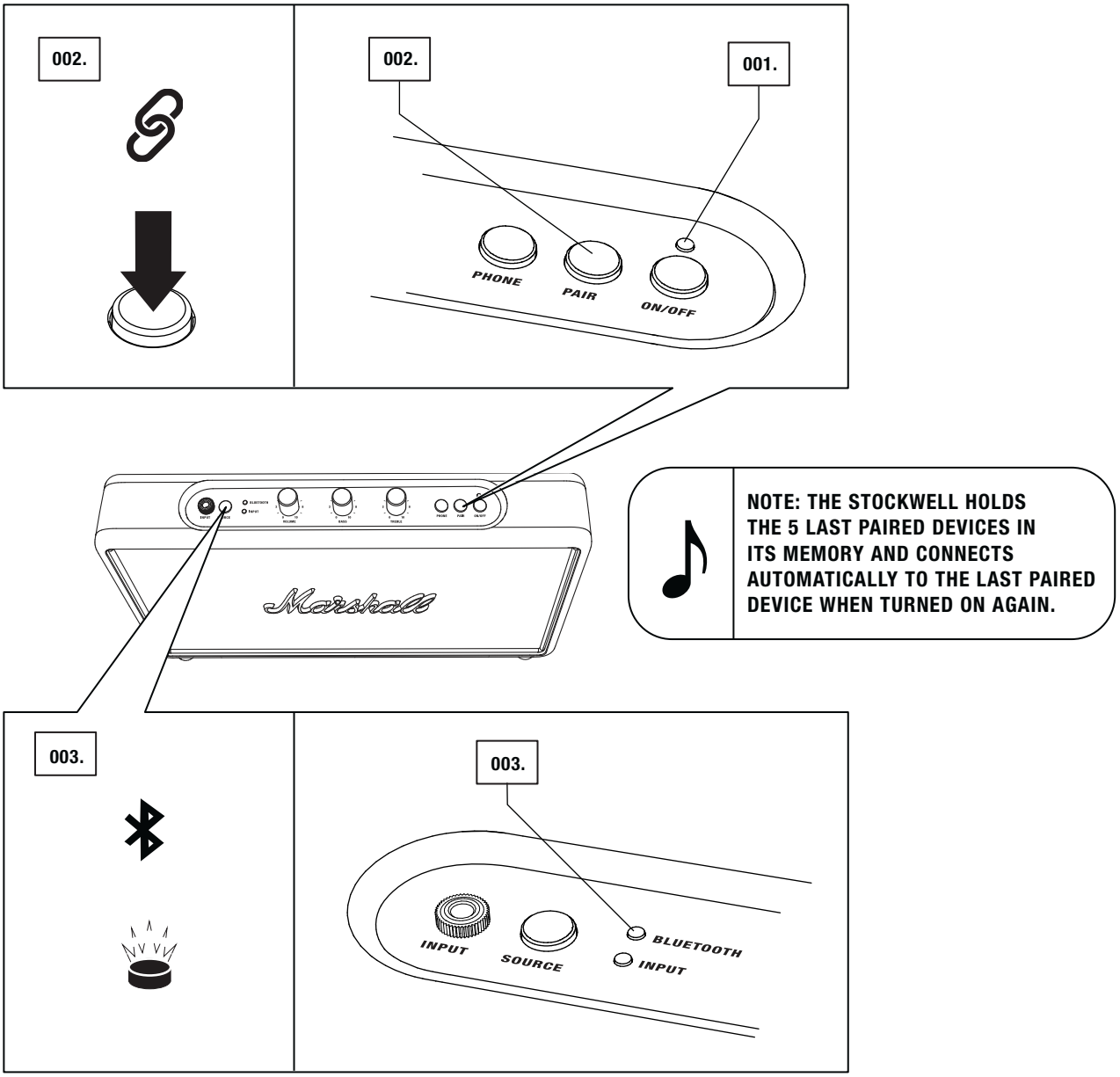

CONNECTING VIA BLUETOOTH (PAIRING)

004. ENABLE BLUETOOTH FUNCTIONALITY ON YOUR DEVICE. (SMARTPHONE, TABLET, COMPUTER).

005. ON YOUR DEVICE, SELECT THE STOCKWELL FROM THE BLUETOOTH LIST AND ACCEPT PAIRING.

006. THE BLUETOOTH INDICATOR ON THE STOCKWELL TURNS TO A STEADY RED AND THE UNITS ARE NOW CONNECTED.

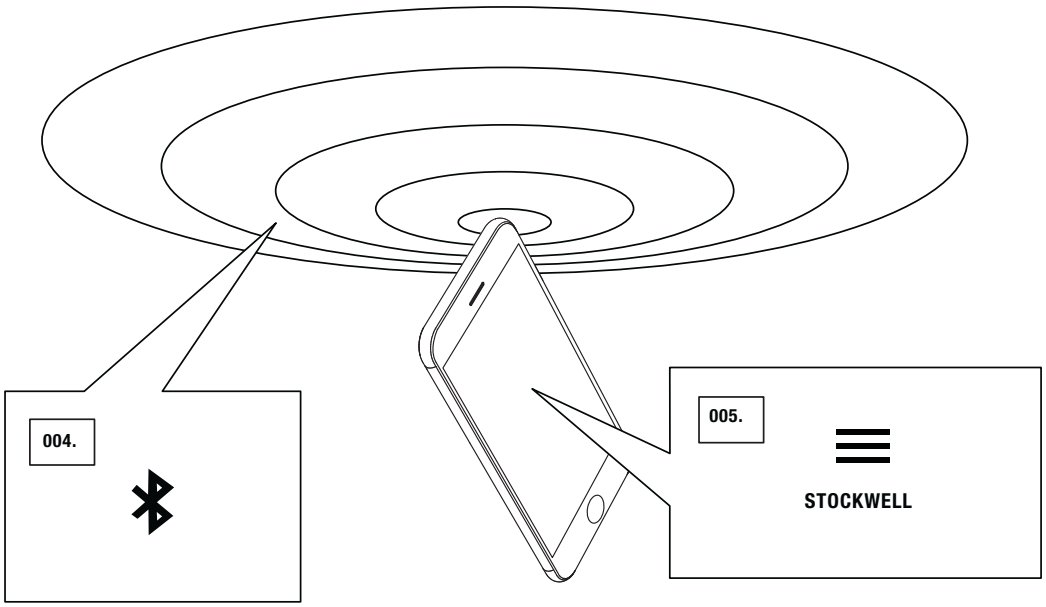

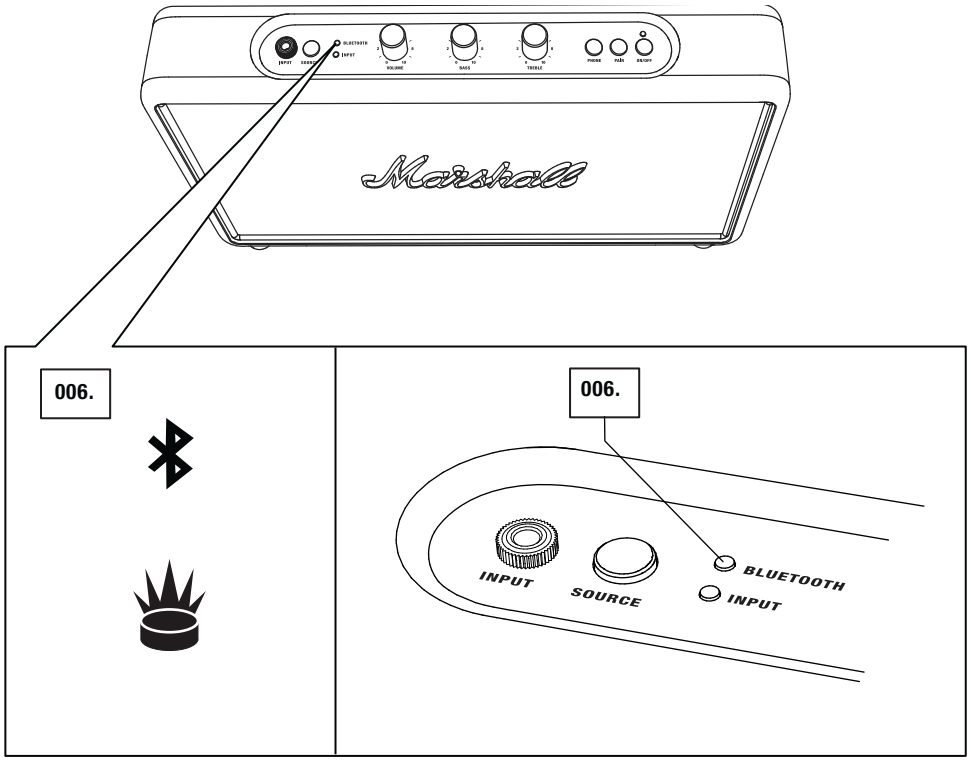

BLUETOOTH AUTO CONNECTION

IF A BLUETOOTH CONNECTED DEVICE IS MOVED OUTSIDE THE RANGE OF THE STOCKWELL (APPROXIMATELY 10 METRES WITHOUT OBSTACLES), IT IS DISCONNECTED. THE DEVICE IS AUTOMATICALLY CONNECTED AGAIN WHEN IT IS MOVED BACK WITHIN RANGE.

THE SPEAKER STORES UP TO FIVE DEVICES AND TRIES TO CONNECT TO THE LAST CONNECTED BLUETOOTH DEVICE FIRST. FOR EXAMPLE, IF THE SPEAKER HAS BEEN CONNECTED TO THE DEVICES A–B–C–D–E, DEVICE E IS GIVEN FIRST PRIORITY, WHILE DEVICE A IS GIVEN LAST PRIORITY. EVERY TIME THE SPEAKER STARTS UP, IT WILL DO AN AUTO CONNECTION OF DEVICES WITHIN ITS RANGE.

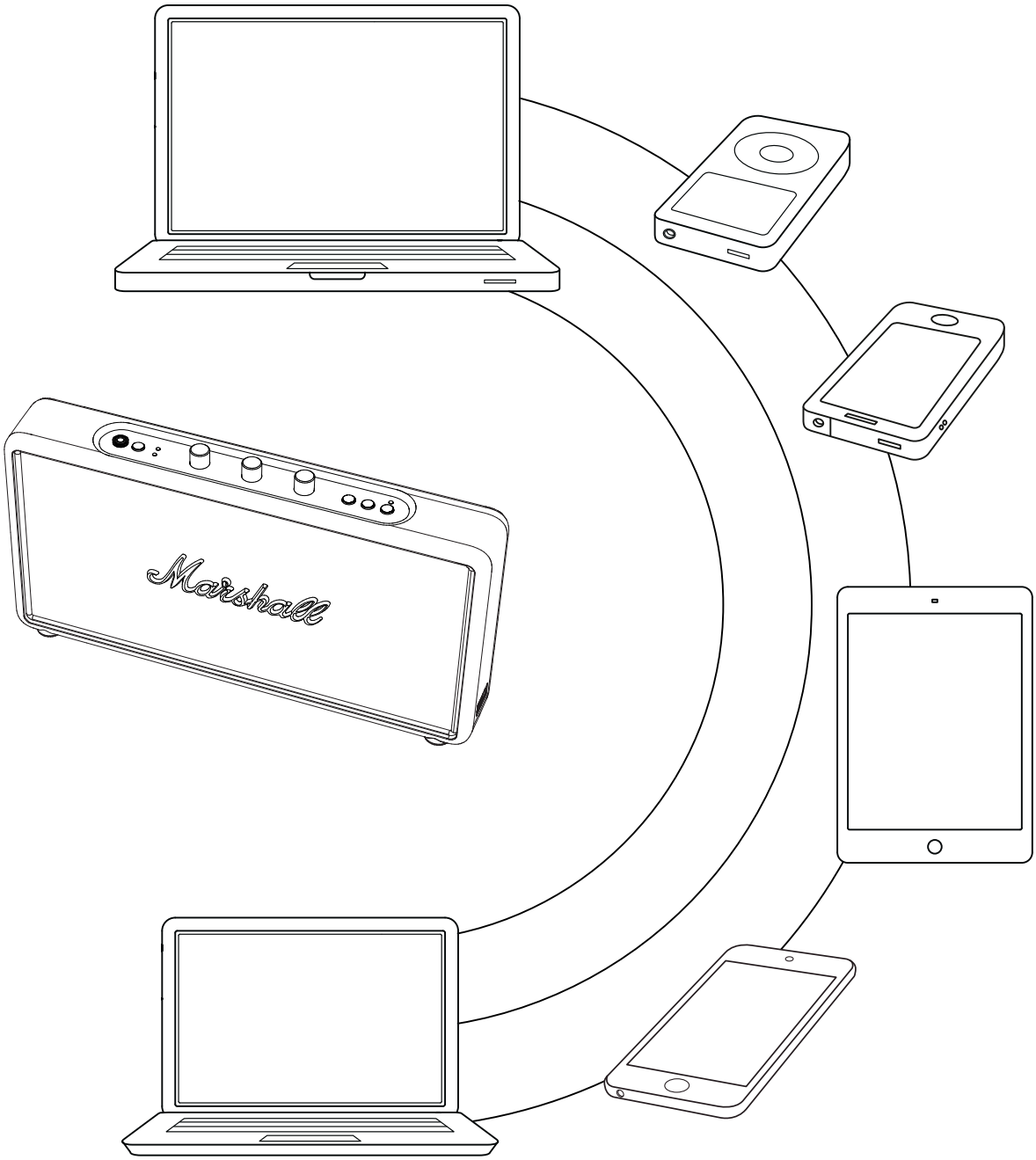

CONNECTING SOUND SOURCE BY CABLE

THERE IS ANOTHER WAY TO CONNECT TO YOUR STOCKWELL – THE OLD FASHIONED WAY, USING THE INCLUDED COIL CORD AND THE 3.5MM INPUT.

USE THE DOUBLE-ENDED COIL CORD WITH 3.5MM PLUGS TO CONNECT TO AUDIO SOURCES THAT HAVE AUDIO OUTPUT SUCH AS A MOBILE TELEPHONE, IPHONE/ IPAD/IPOD, MP3 PLAYER, OR AIRPORT EXPRESS.

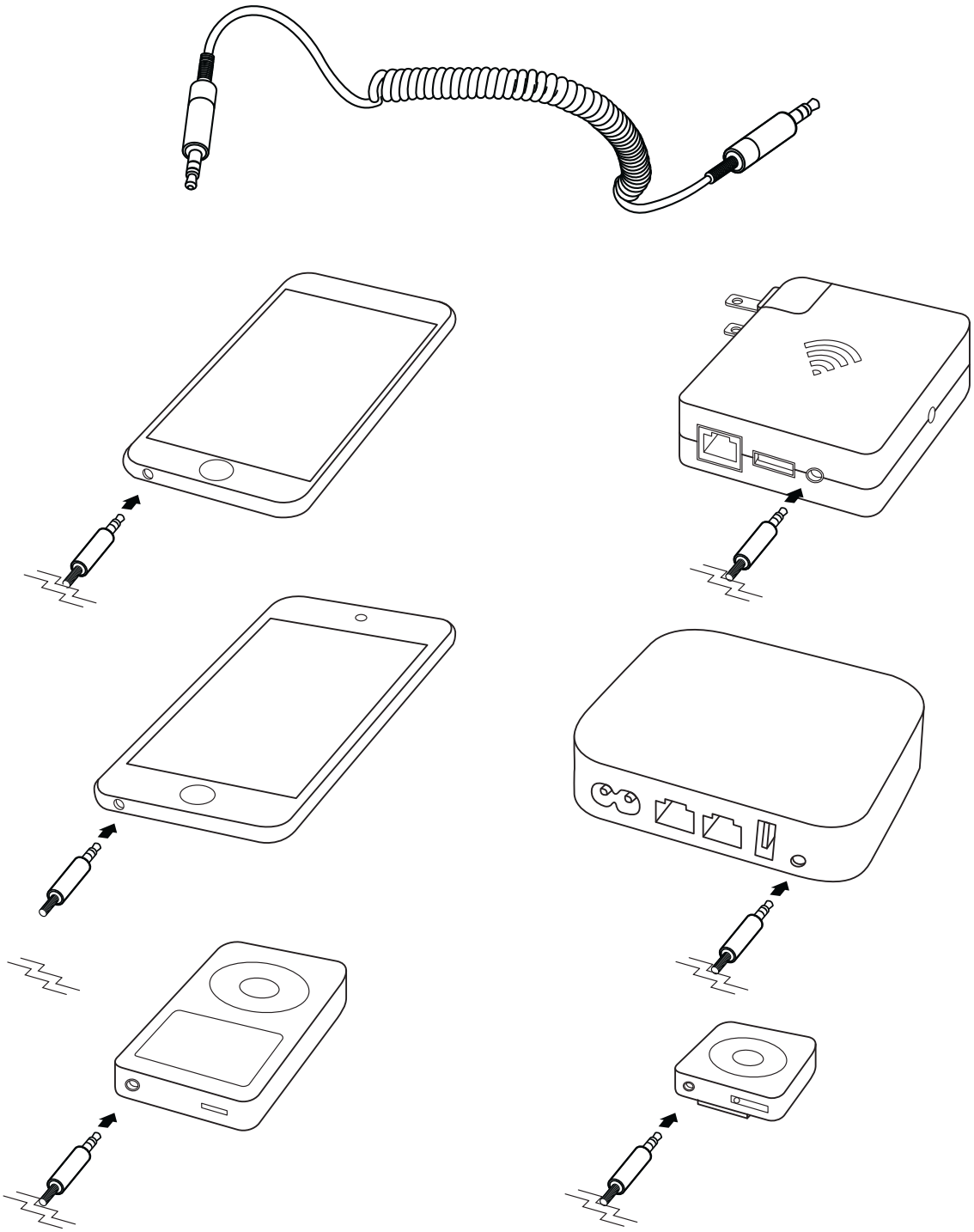

CONNECTING SOUND SOURCE BY CABLE

001. CONNECT THE CORD WITH THE 3.5MM STEREO PLUG TO THE INPUT ON THE STOCKWELL.

002. CONNECT THE CORD WITH THE 3.5MM STEREO PLUG TO THE MUSIC PLAYER.

003. SELECT INPUT AS SOURCE BY PUSHING THE SOURCE BUTTON UNTIL THE INPUT INDICATOR IS LIT

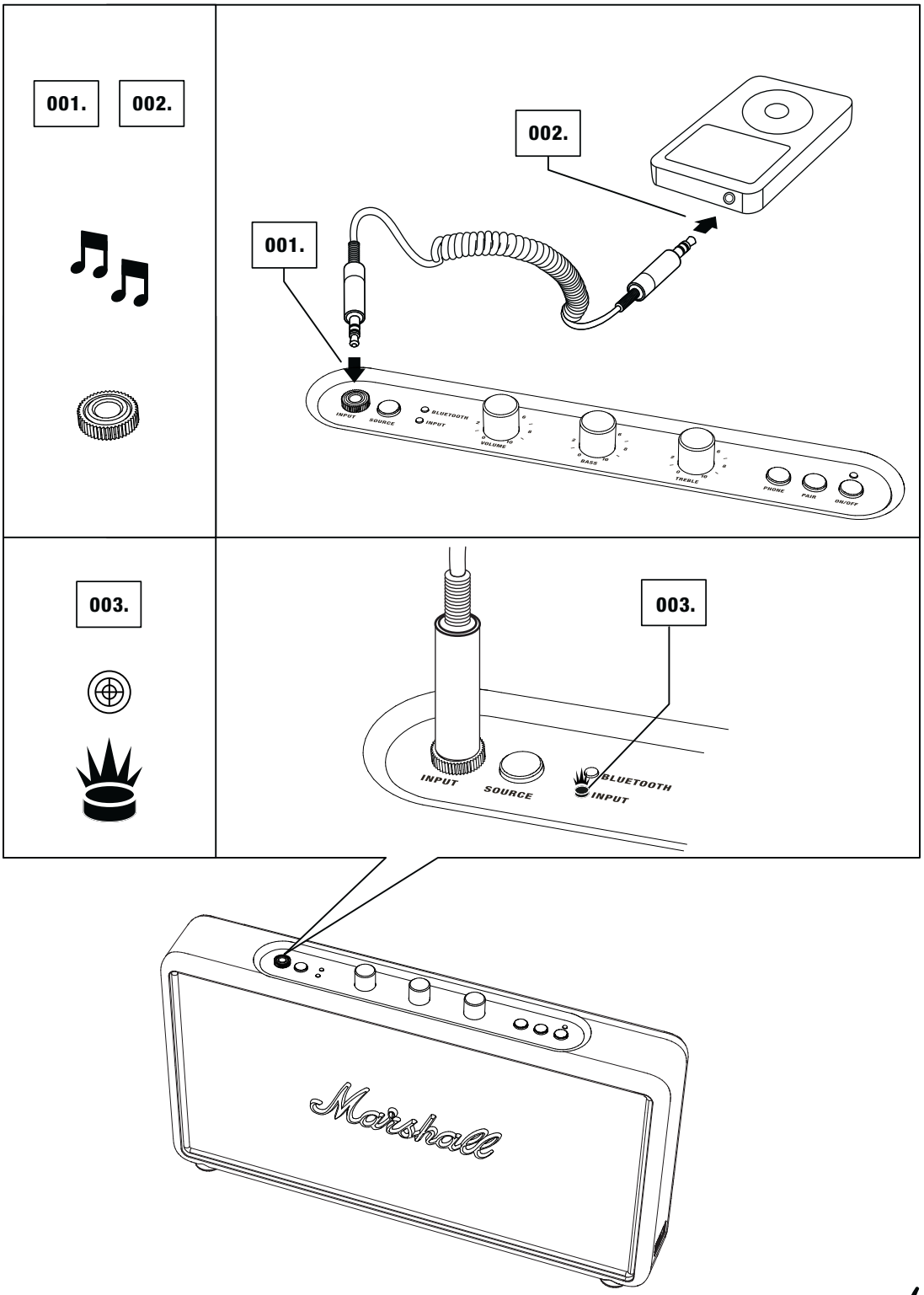

Marshall

CHOOSING YOUR SOURCE

THE INPUT SOURCE THAT IS CURRENTLY SELECTED IS SHOWN BY A LIT INDICATOR. TO SELECT A DIFFERENT SOUND SOURCE:

001. PUSH THE SOURCE BUTTON TO CHOOSE BETWEEN BLUETOOTH AND 3.5MM STEREO PLUG.

002. A LIT INDICATOR SHOWS WHICH SOURCE YOU HAVE SELECTED.

- **BLUETOOTH**
- **INPUT - 3.5MM STEREO PLUG**

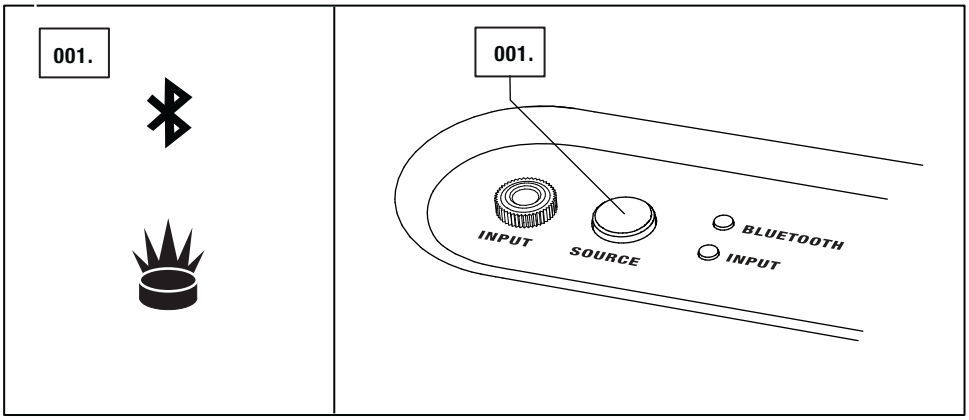

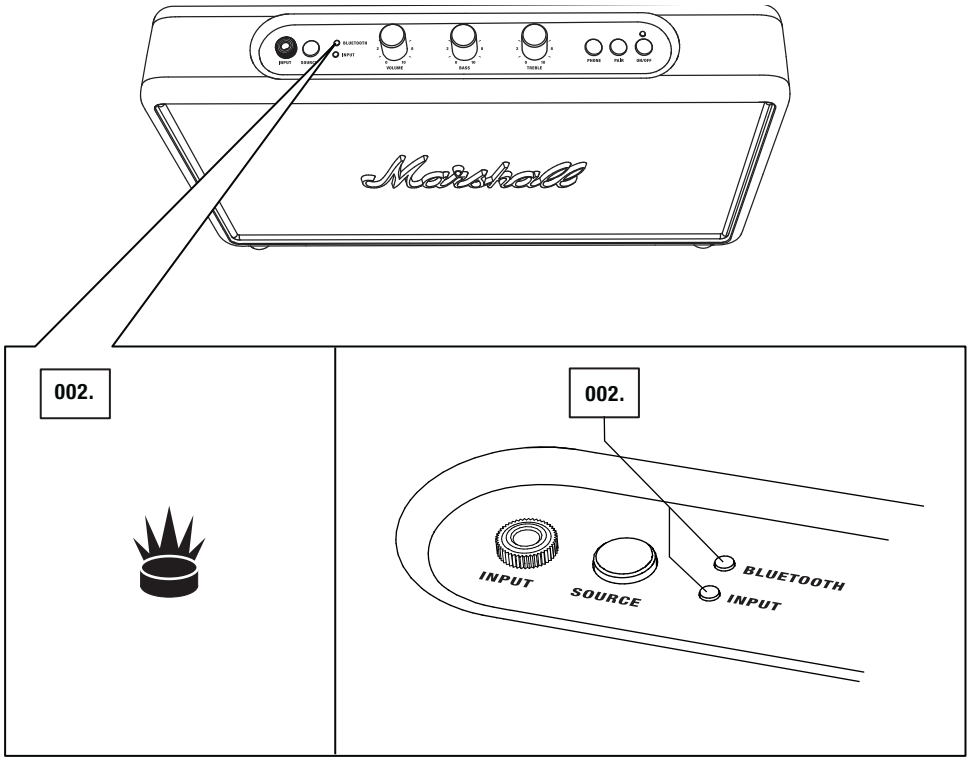

USING THE STOCKWELL IN SPEAKER PHONE MODE

THE STOCKWELL CAN BE USED AS A SPEAKER PHONE. WHEN CONNECTED TO A PHONE THROUGH BLUETOOTH, YOUR RINGTONE WILL SOUND IN THE STOCKWELL.

001. TO ANSWER AN INCOMING CALL, PUSH THE PHONE BUTTON ONCE.
002. TO END AN ONGOING CALL, PUSH THE PHONE BUTTON ONCE.
003. DECLINE AN INCOMING CALL BY PUSHING THE ON/OFF BUTTON.

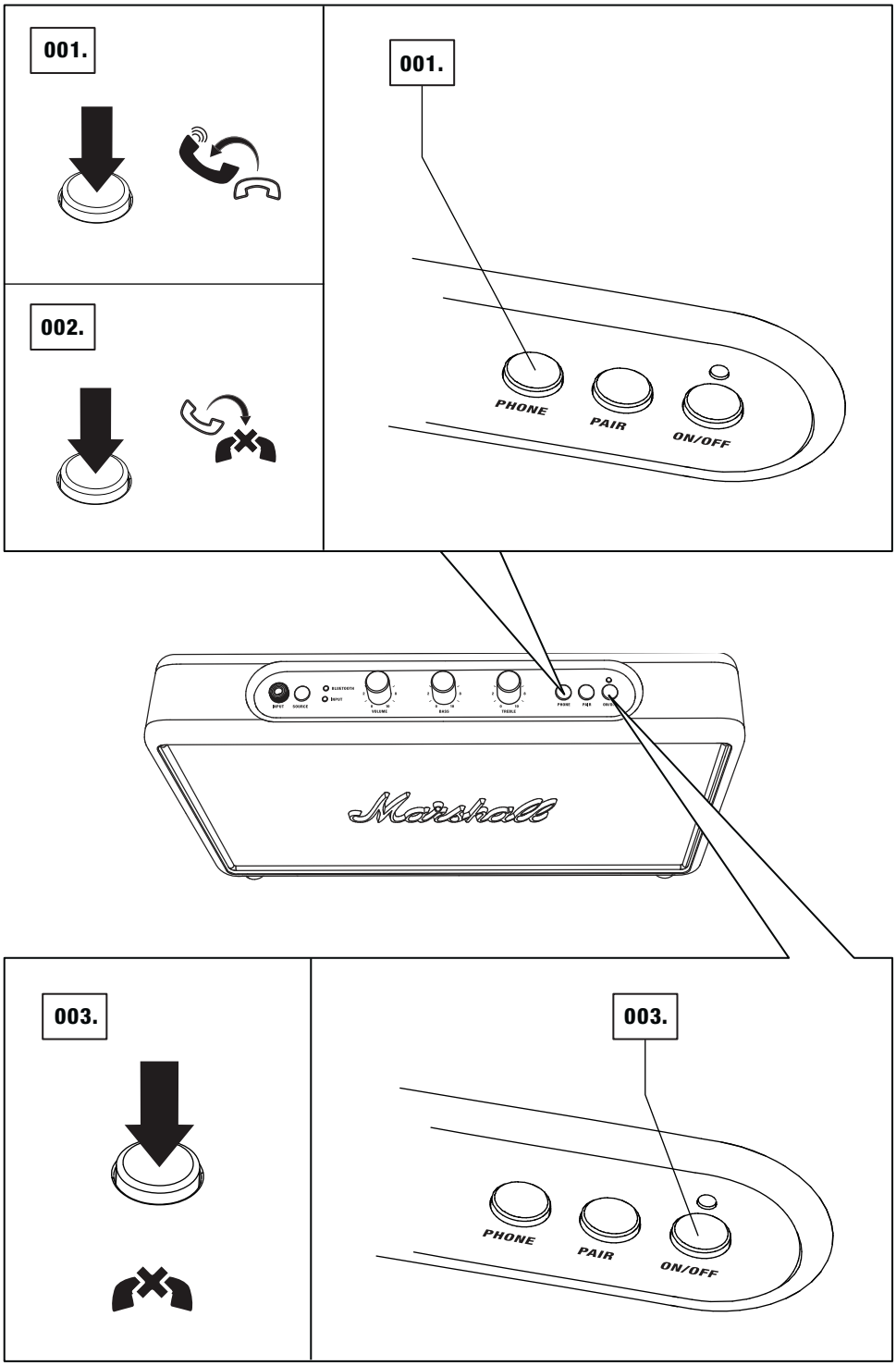

ADJUSTING THE SOUND

THE SOUND OF THE STOCKWELL CAN BE ADJUSTED BY TURNING THE RETRACTABLE VOLUME, BASS AND TREBLE KNOBS.

001. PUSH THE RETRACTABLE KNOB FOR IT TO POP UP.
002. TURN THE KNOB TO ADJUST THE SOUND TO YOUR LIKING.
003. PUSH THE KNOB BACK IN WHEN DONE.

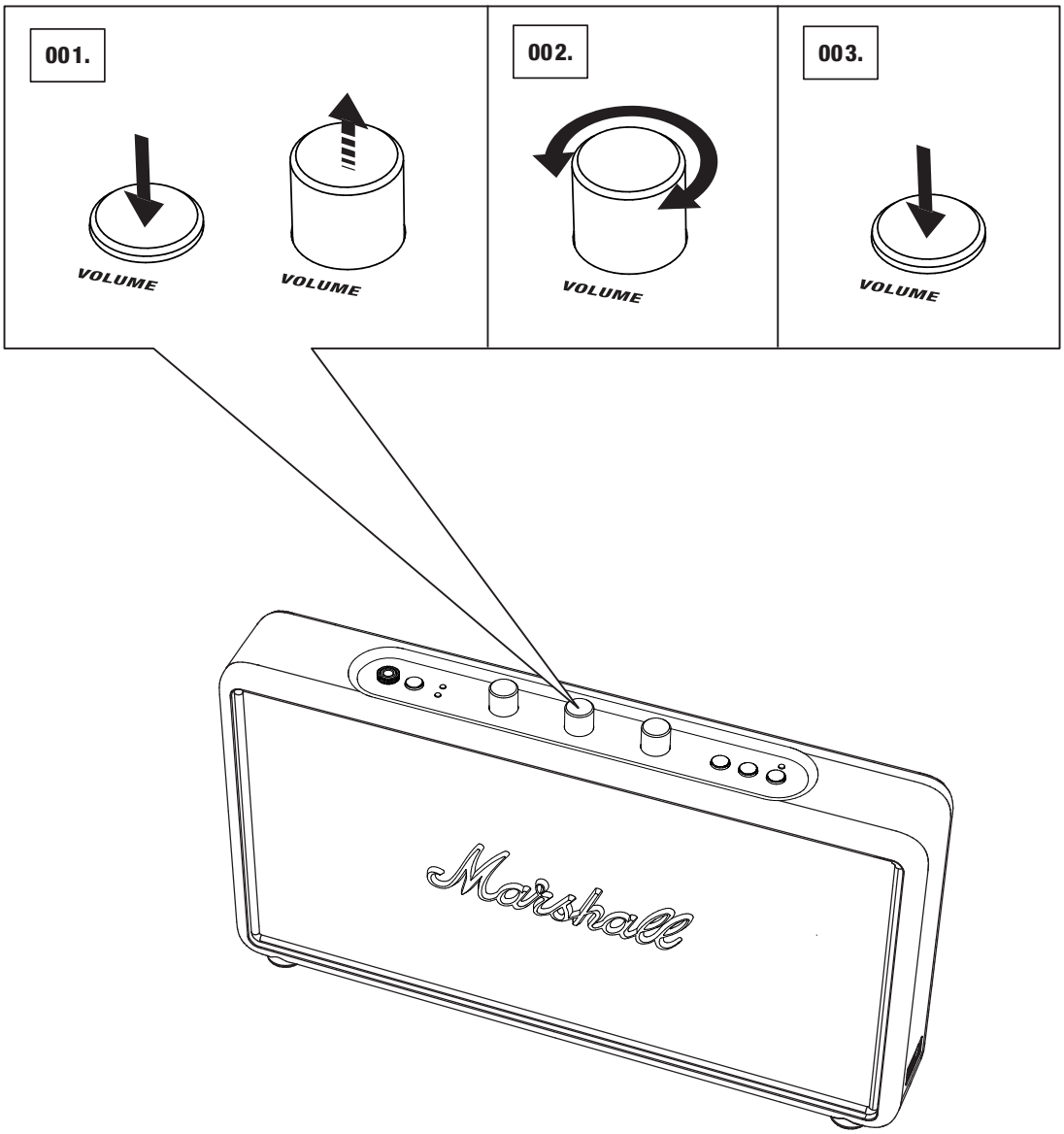

ADJUSTING THE SOUND

THE STOCKWELL HAS THREE KNOBS FOR ADJUSTING THE SOUND:

001. VOLUME KNOB
002. BASS KNOB
003. TREBLE KNOB

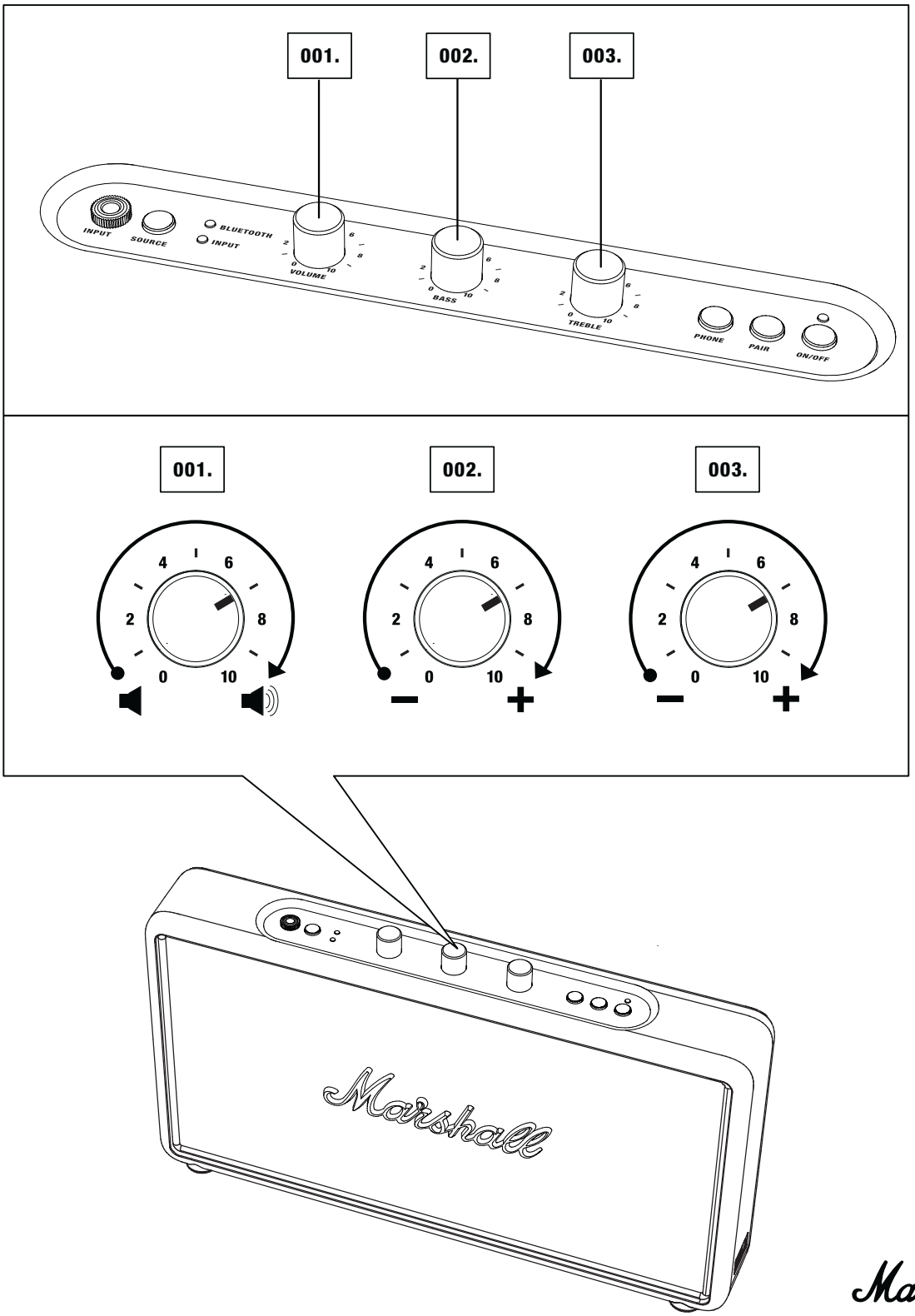

REPLACING THE INTERNAL BATTERY

IF THE INTERNAL BATTERY IS BROKEN OR WORN OUT, YOU CAN REPLACE IT WITH A NEW ONE. THE FAULTY BATTERY PACK MUST ALWAYS BE RECYCLED ACCORDING TO LOCAL LAWS AND REGULATION.

001. UNPLUG THE POWER ADAPTER FROM THE WALL SOCKET.

002. UNPLUG THE POWER ADAPTER CORD FROM 15V POWER SOCKET ON THE LEFT HAND SIDE OF THE STOCKWELL.

003. IF THE STOCKWELL IS EQUIPPED WITH A FLIP COVER, REMOVE IT ACCORDING TO THE INSTRUCTION ON PAGE 027.

004. CAREFULLY PUT THE STOCKWELL FRONT DOWN ON A FLAT, CLEAN SURFACE.

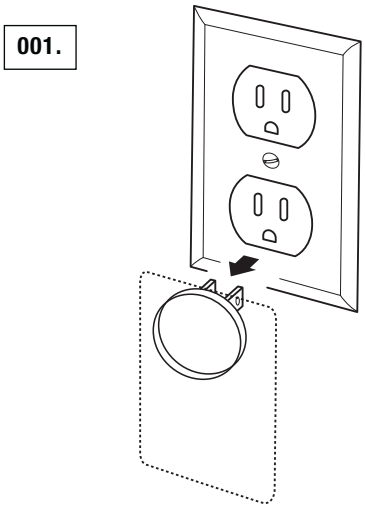

! NOTE: FULLY CHARGE THE STOCKWELL BATTERY BEFORE USING IT FOR THE FIRST TIME.

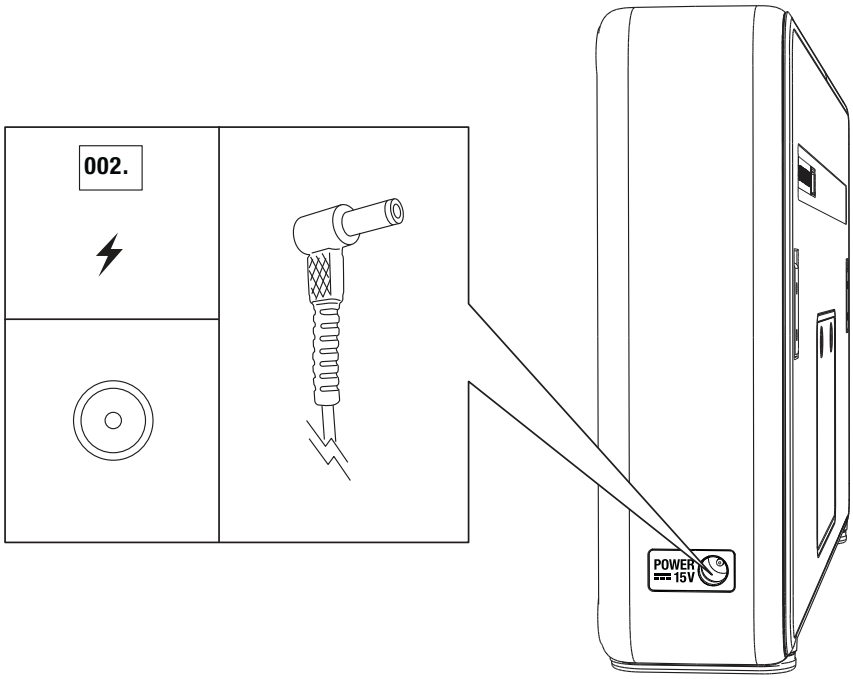

Marshall

REPLACING THE INTERNAL BATTERY

005. USE A TORX SCREWDRIVER (SIZE T10) TO REMOVE THE TWO SCREWS ON THE BATTERY HATCH ON THE BACK OF THE STOCKWELL.
006. OPEN THE BATTERY HATCH AND REMOVE IT FROM THE SPEAKER.
007. PULL THE BATTERY TAB AND CAREFULLY LIFT THE BATTERY WITHOUT PULLING THE CABLE CONNECTING THE BATTERY TO THE STOCKWELL.
008. CAREFULLY DISCONNECT THE BATTERY PLUG AND REMOVE THE BATTERY.
009. REVERSE THE PROCESS TO INSTALL THE NEW BATTERY.

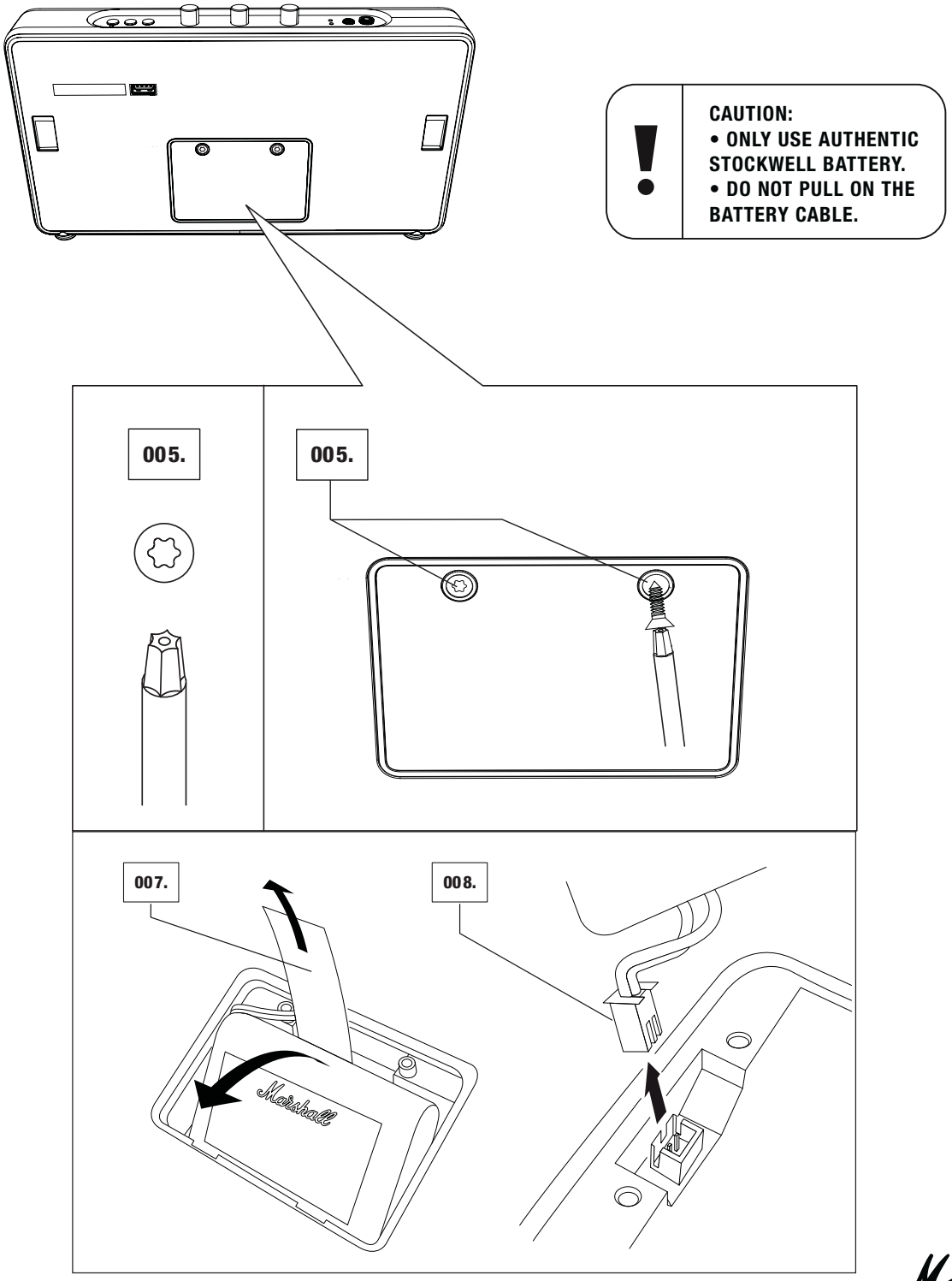

USING THE FLIP COVER (OPTIONAL)

THE FLIP COVER CAN BE FOLDED UP NEATLY ON THE BACK OF THE STOCKWELL WHEN YOU ARE USING THE SPEAKER.

001. UNFOLD THE FLIP COVER, STARTING FROM THE FRONT BOTTOM OF THE STOCKWELL ALL THE WAY OVER THE SPEAKER.
002. FOLD THE THE FLIP COVER AND SNAP IT TO THE BACK OF THE SPEAKER.
003. THE FLIP COVER IS HELD IN PLACE WITH THE HELP OF THE MAGNETS.

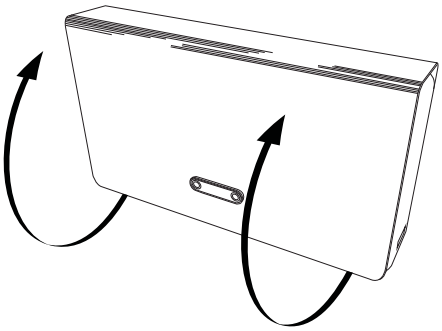

001

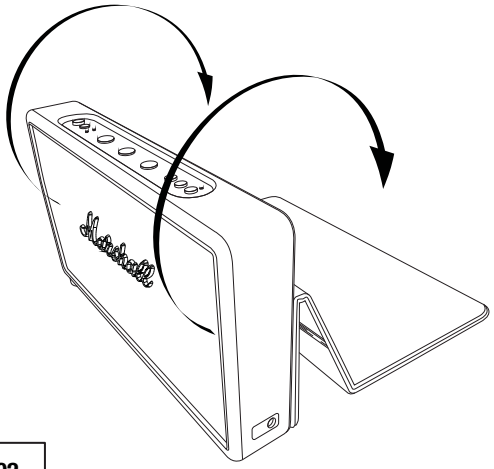

002.

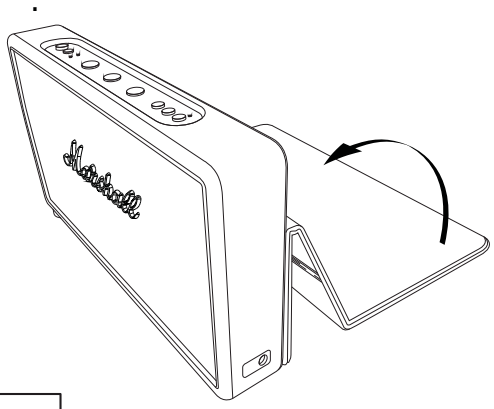

003.

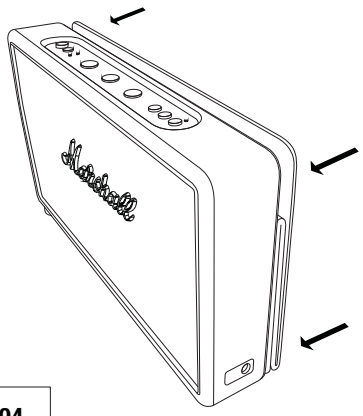

004.

USING THE FLIP COVER (OPTIONAL)

THE FLIP COVER CAN BE FOLDED INTO A TILT STAND FOR THE STOCKWELL.

001. UNFOLD THE FLIP COVER, STARTING FROM THE FRONT BOTTOM OF THE STOCKWELL ALL THE WAY OVER THE SPEAKER.
002. FOLD THE TOP OF THE FLIP COVER UNDER THE STOCKWELL.
003. TILT THE SPEAKER UNTIL IT RESTS SECURELY ON THE FLIP COVER.

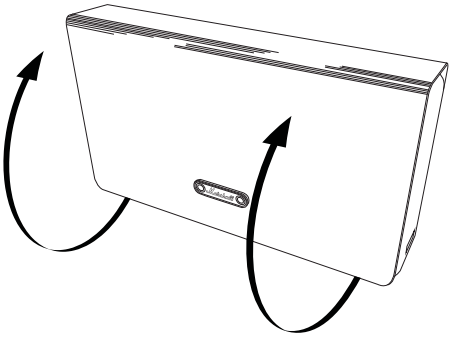

001.

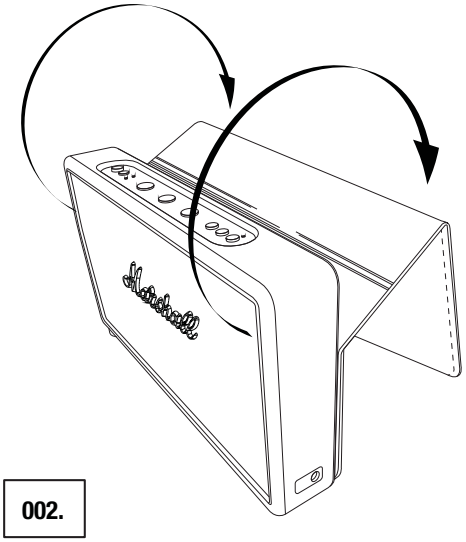

002.

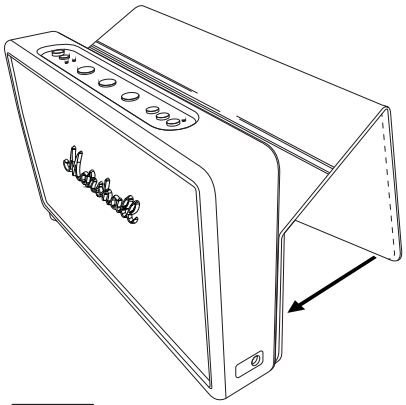

003.

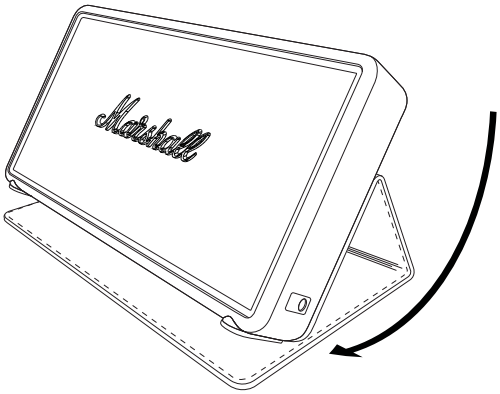

004.

REMOVING THE FLIP COVER (OPTIONAL)

001. UNFOLD THE FLIP COVER, STARTING FROM THE FRONT BOTTOM OF THE STOCKWELL ALL THE WAY OVER THE SPEAKER.
002. ON THE BACK OF THE STOCKWELL, GRAB THE FLIP COVER BY THE BOTTOM AND GENTLY PULL. THE COVER IS HELD IN PLACE BY HIDDEN MAGNETS.
003. PULL THE FLIP COVER DOWN AND OUT FROM THE SPEAKER TO REMOVE IT.

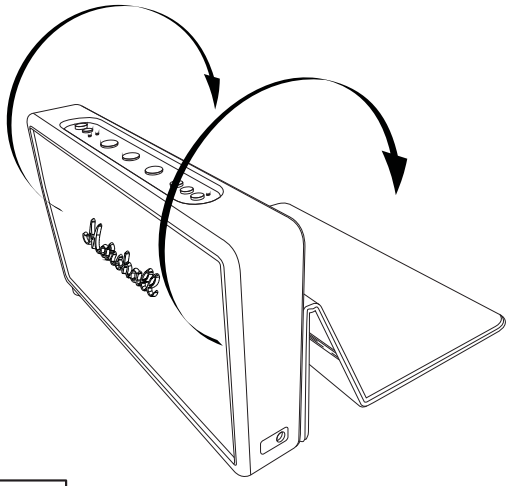

001.

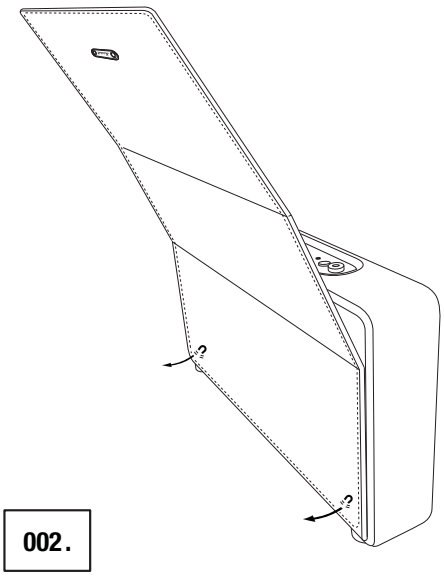

002.

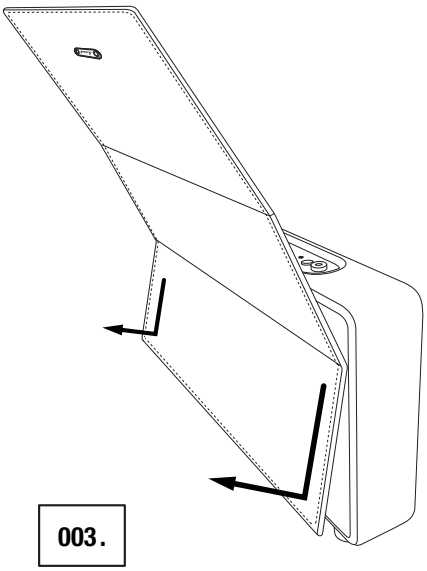

003.

ATTACHING THE FLIP COVER (OPTIONAL)

THE FLIP COVER IS SOLD SEPARATELY AND ALSO INCLUDED IN SOME MODELS OF THE STOCKWELL. IT CAN PROTECT YOUR STOCKWELL WHEN IT IS NOT IN USE AND CAN ALSO BE FOLDED TO A STAND FOR THE SPEAKER.

001. GENTLY SLIDE THE HOOKS OF THE FLIP COVER INTO THE MATCHING SLOTS ON THE BACK OF THE STOCKWELL.
002. THE FLIP COVER IS HELD IN PLACE WITH HIDDEN MAGNETS.
003. PUSH DOWN THE RETRACTABLE KNOBS AND FOLD THE FLIP COVER OVER THE TOP AND FRONT OF THE STOCKWELL.

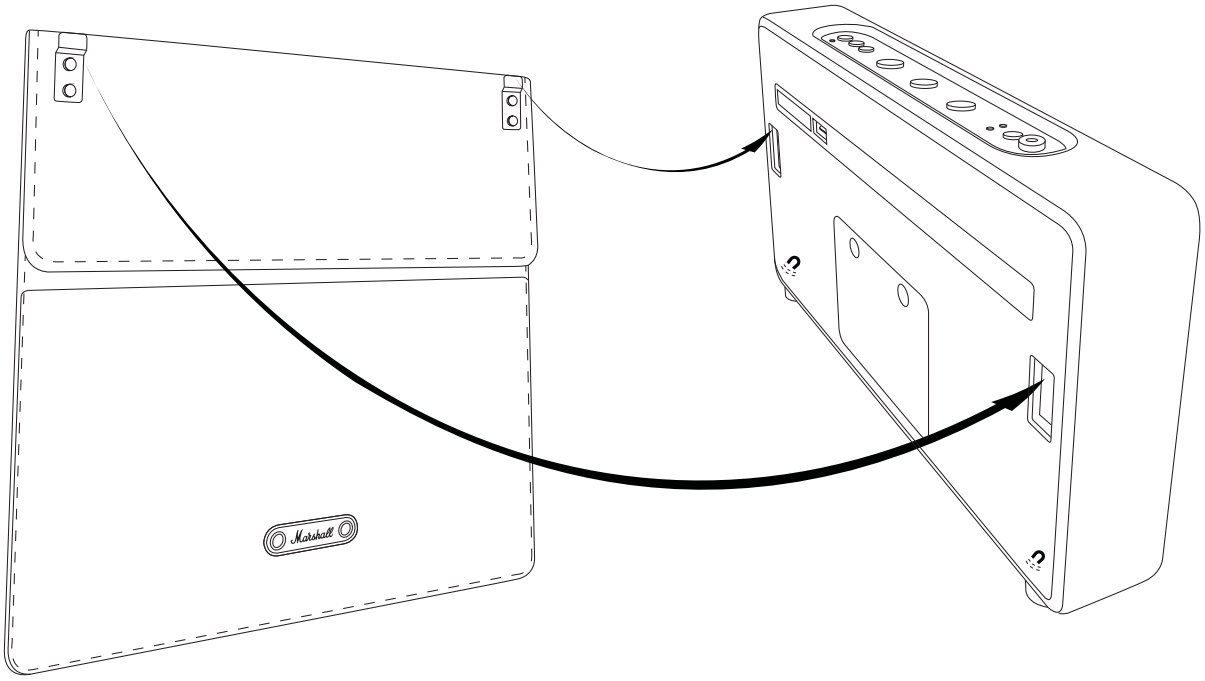

TECHNICAL INFORMATION

SOUND SPECIFICATION

- ACTIVE STEREO LOUDSPEAKER WITH BASS REFLEX SYSTEM
- TONE CONTROLS:
  - BASS: 300Hz, +6dB TO -12dB
  - TREBLE: 3kHz, +6dB TO -12dB
- CLASS D AMPLIFIER: 2 x 10W
- WOOFER: 2 x 2.25”
- FULL RANGE: 2 x 2.25”
- PASSIVE RADIATORS: 2 x 3.5” x 1.5”
- MAX SPL: 90dB SPL @ 1m
- FREQUENCY RANGE: 50 - 20.000Hz

CONNECTIVITY

- BLUETOOTH: STANDARD V4.0 + EDR
- INPUT - 3.5mm STEREO PLUG

TECHNICAL INFORMATION

- POWER ADAPTER: 15V/1.8A
- MAX PEAK POWER CONSUMPTION: 60W
- STANDBY POWER CONSUMPTION:
  - BATTERY MODE: 150µA
  - POWER ADAPTER MODE: 0.2W
- USB CHARGING OUTPUT: 5V/1A
- MAX POWER OUTPUT: 25W RMS
- BATTERY TYPE: 3 x 3.7V LI-IO BATTERIES, 2200mAh
- BATTERY PLAYING TIME:
  - MAX VOLUME: 10h
  - MID VOLUME: 25h[1]
- BATTERY CHARGING TIME: 3h
- WEIGHT: 1.20kg
- SIZE: 260 x 140 x 41mm

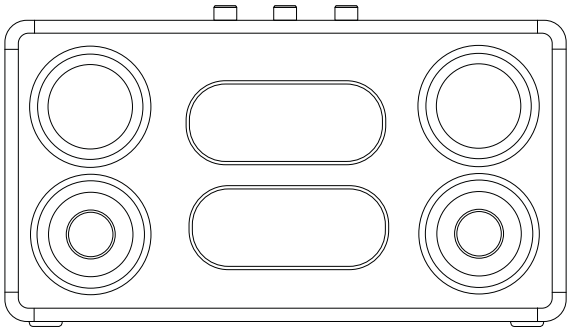

NOTE: THE FRONT FRONT IS NOT REMOVABLE. THIS ILLUSTRATION INTENDS TO SHOW THE INTERNAL SPEAKER LAYOUT. DO NOT ATTEMPT TO REMOVE THE FRONT FRET FOR RISK OF DAMAGING YOUR ACTIVE LOUDSPEAKER.

<?> *PLAYING TIME CALCULATED WITH THE STOCKWELL PLAYING AT VOLUME CONTROL 5 WITH RANDOMLY SELECTED MUSIC CONTENT.

TROUBLE SHOOTING

PROBLEM	CAUSE	ACTION
THE STOCKWELL WILL NOT TURN ON.	The internal battery is discharged or the power cord is not properly connected into a working wall socket.	Insert the power cord into the 15V power socket and the power adapter to the wall socket.
THE SOUND IS WEAK OR THERE IS NO SOUND AT ALL.	The 3.5mm cord/input cable/ signal cable is not correctly connected to either the STOCKWELL or the music player. The wrong input source is selected. The volume level is too low on the STOCKWELL. The volume level is too low on the music player.	Unplug and re-plug the 3.5mm cord/input cable/ signal cable into both the STOCKWELL and the music player. Push the input button to select the correct input source. Push the volume knob for it to pop up and turn up the volume on the STOCKWELL. Turn up the volume on the music player.
THE SOUND IS DISTORTED.	The volume level is too high. The original sound file (mp3) is of poor quality. Excessive playback volume. Too much bass/treble boost.	Turn down the volume. Try another sound file (mp3) or music player. Turn down playback level on the volume button or reduce the sound level on the music player.. Turn down the volume control on the control panel and/or music player. Reduce the bass boost on the control panel or excessive bass boost/eq on the music player.

TROUBLE SHOOTING

PROBLEM	CAUSE	ACTION
SHARP CRACKLING/ CLICKING ON STRONG PASSAGES/ TRANSIENTS.	Clipping when the amplifier runs out of power.	Turn down the volume on the STOCKWELL or on the music player. Reduce the bass boost.
ERRATIC PERFORMANCE.	Interference from another source or electronic device.	Move the STOCKWELL to another spot or turn off or move other electronic devices.
BLUETOOTH WILL NOT CONNECT.	Your Bluetooth device is too far away from the STOCKWELL during the pairing process.	Place the Bluetooth device closer to the STOCKWELL during the pairing process.
THE STOCKWELL CANNOT FIND A BLUETOOTH CONNECTION.	The STOCKWELL cannot search or connect correctly in the following cases: • There is a strong electric field surrounding the STOCKWELL. • The Bluetooth device is turned off, not available or does not function as it should. • Please note that items such as, for example, microwave ovens, wireless network adapters, fluorescent lights and gas cookers use the same frequency range as the Bluetooth device, which could lead to electrical disturbances.	Please ensure that there is no electrical interference surrounding the STOCKWELL, that your Bluetooth device is on and working properly. **NOTES:** **• A bluetooth device could cause sound-related or technical faults, depending on use, in the following cases:** **- when some part of the body is in contact with the receiving/transmitting system for the bluetooth device or the STOCKWELL.** **- electrical variations due to obstacles in the form of walls, corners, etc.** **- exposure to electrical disruptions from devices within the same frequency band, for example medical equipment, microwave ovens and wireless networks.** **• This wireless device may cause electrical disruptions during use.** **• You do not need to enter the pin code (password) when connecting the bluetooth device to the STOCKWELL. If the window for entering the pin code is displayed, you should enter <0000>.** **• You cannot connect to a bluetooth device that only supports the hf (hands Free) area function.**

TROUBLE SHOOTING

PROBLEM	CAUSE	ACTION
BLUETOOTH CONNECTION IS BROKEN OR DISRUPTED.	The Bluetooth connection only works when it is near the device. The connection is automatically broken if the Bluetooth device moves outside of the area. The connection may even be affected due to obstacles such as walls or doors.	Ensure that the STOCKWELL and the Bluetooth device are within 10 meters, and unobstructed by obstacles such as walls or doors. Insert the power cord into the 15V power socket and the power adapter to the wall socket.
THE INTERNAL BATTERY IS NOT CHARGING	The STOCKWELL is not connected to AC mains power and not switched on.	Insert the power cord into the 15V power socket and the power adapter to the wall socket.
BATTERY IS NOT WORKING/BATTERY LIFE HAS DECLINED	The internal battery is broken or worn out and needs to be replaced.	Replace the internal battery according to the instruction on page 024.
THE STOCKWELL WILL NOT ANSWER CALLS	The STOCKWELL is not connected to your phone.	Ensure that the STOCKWELL is put near the Bluetooth device, and unobstructed by obstacles such as walls or doors.