PRELIMINARY DATA SHEET

SKY66431-11: 5G Massive IoT System-in-Package

Applications

- Personal/pet tracking
- eBike tracking
- Industrial asset tracking
- Smart metering
- Wearable medical devices
- Security/alarm systems
- Fleet management
- Industrial monitoring devices
- Low-power IoT devices

Features

- Most compact LTE modem and RF front-end in a single package:
  - Integrated baseband, transceiver, RF front end, RAM memory, crystals and power management
  - 8.8 x 11.3 x 1.585 (max.) mm BGA package, 0.5 and 1 mm pitch
  - Device weight: TBD
- Compliant to 3GPP Rel-14, upgradable to 3GPP Rel-15 & 16
- Optimized for half-duplex operation (HD-FDD) for LTE
- Pre-certified with major MNOs, FCC, ISED/IC, RED, UKCA, ACMA, and GCF/PTCRB
- Global frequency band support:
  - Low-band: B5, B8, B12, B13, B14, B17, B18, B19, B20, B26, B28, B85
  - Mid-band: B1, B2, B3, B4, B25, B66
- Best-in-class deep sleep power consumption of 1 uA
- Positioning over LTE (PoLTE), a low-power, cloud-based solution for indoor/outdoor positioning
- Embedded Low-power GNSS solution eliminating need for an external GNSS chipset for intermittent tracking
- Extremely low leakage internal PMU that enables opeability for 20 years
- Throughput:
  - LTE-M (1.4 MHz bandwidth) up to 300 kbps DL, 1.1 Mbps UL
- Powerful fully integrated application MCU based on Andes D15 Core
- Single 2.8 V to 5.5 V supply operation
- Operating temperature range: -40 °C to +85 °C
- Skyworks conformal shielding, silver (Ag) free
- Halogen free, GaAs free
- REACH lead (Pb)-free and RoHS-compliant
- MSL3 @ 260 °C per JEDEC J-STD-020
- UL-94 Flammability Classification V-0

Description

The SKY66431-11 is a multi-band multi-chip System-in-Package (SiP) supporting 5G Massive IoT (LTE) platforms. The SiP integrates the entire RF front end transceiver, power management, memory, crystals and baseband modem for an LTE multi-band radio operating in the 698 MHz to 2200 MHz frequency range. NOR flash, and a few passives external to the package complete the SiP implementation.

Skyworks Green™ products are compliant with all applicable legislation and are halogen-free. For additional information, refer to *Skyworks Definition of Green™*, document number SQ04–0074.

This SiP includes the Sequans Monarch 2 SQN3430 chipset

SEQUANS MONARCH2 INSIDE

For additional information on hardware setup and programming support, visit:

https://cloud.sequans.com

Front End Section

The front-end section includes RX low-pass filters, broadband PA with bias controller, TX low-pass harmonic filter, and antenna switch.

Transceiver Section

Fully integrated 3GPP compliant LTE-M and RF front-end solution up to +23 dBm.

- Control for synthesizer, TX/RX, adjustment, and gain control
- Clock reference of 38.4 MHz

MCU Section[1]

The SKY66431-11 SiP can be used as a slim modem, driven by an external MCU via UART and GPIO.

Alternatively, the full customer application can run from its integrated Application MCU.

[1]Pending future firmware release

Baseband Modem Section

- DL processing block, handling LTE downlink physical layer (RX)
- UL processing block, handling LTE uplink physical layer (TX)
- Synchronization processing block, handling frequency search and synchronization to LTE network
- Optimized for Cat-M1 channels defined in 3GPP Release 14, upgradable to Release 15 & 16
- A quad-IO SPI interface (QSPI) to 1.8 V serial NOR flash of 128 Mbit, running at 104 MHz, with support of eXecute-in-Place (XIP) and critical word first wrapping reads
- A pSRAM controller interfacing with an embedded 64-Mbit pSRAM at 104 MHz
- Three high-speed UARTs with hardware flow control
- One I^2C master up to 0.4 Mbps
- One SPI master and slave up to 13 MHz
- Muxed GPIOs interruptible, with support of pulse counter and PWM functionality
- One UICC interfaces compliant with ETSI TS 102 221 specification, including SIM card removal detection and support for 1.8 V
- Secured JTAG, with possibility of enabling or disabling the interface by hardware or secured software

NOTE: This SiP includes the Sequans Monarch 2 SQN3430 chipset. For more specific information related to that chipset, which is not included in this data sheet, refer to the data sheet for that product.

A functional block diagram is shown in Figure 1. A typical application block diagram is shown in Figure 2. The pinout is shown in Figure 3. Signal pin assignments and functional pin descriptions are described in Table 1.

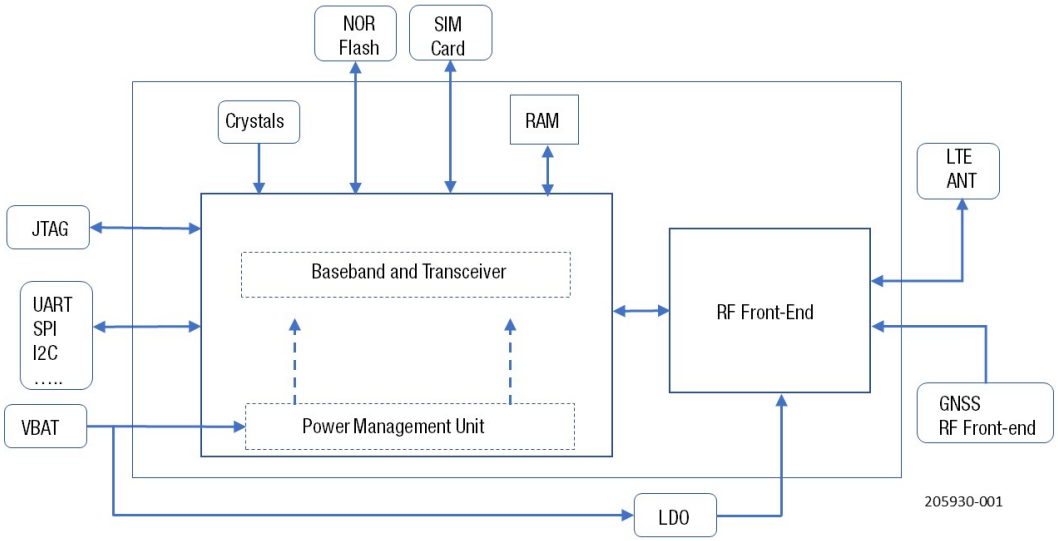

Figure 1. SKY66431-11 Functional Block Diagram.
The external NOR flash shall be pre-burnt with a valid firmware before SMT

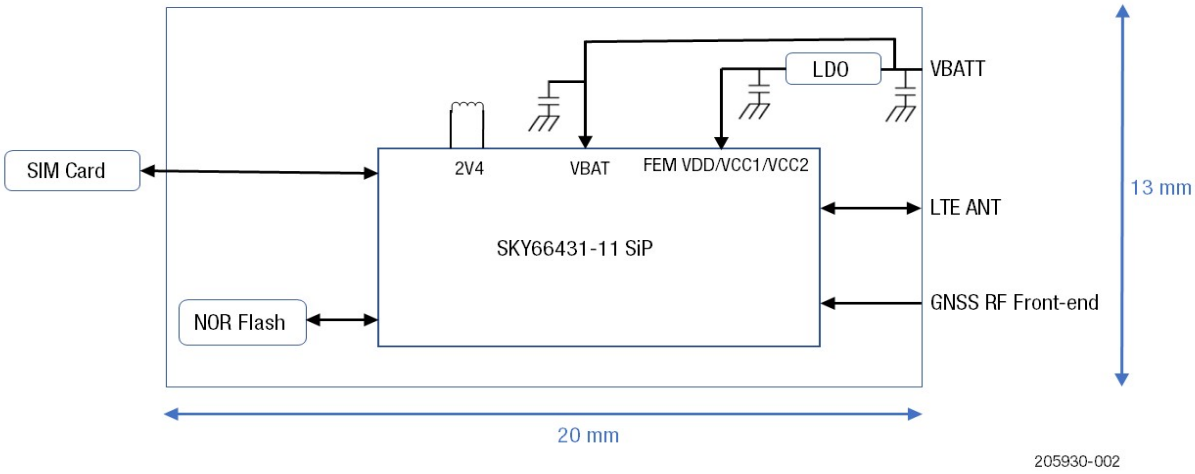

Figure 2. SKY66431-11 Typical Application Block Diagram
The external NOR flash shall be pre-burnt with a valid firmware before SMT

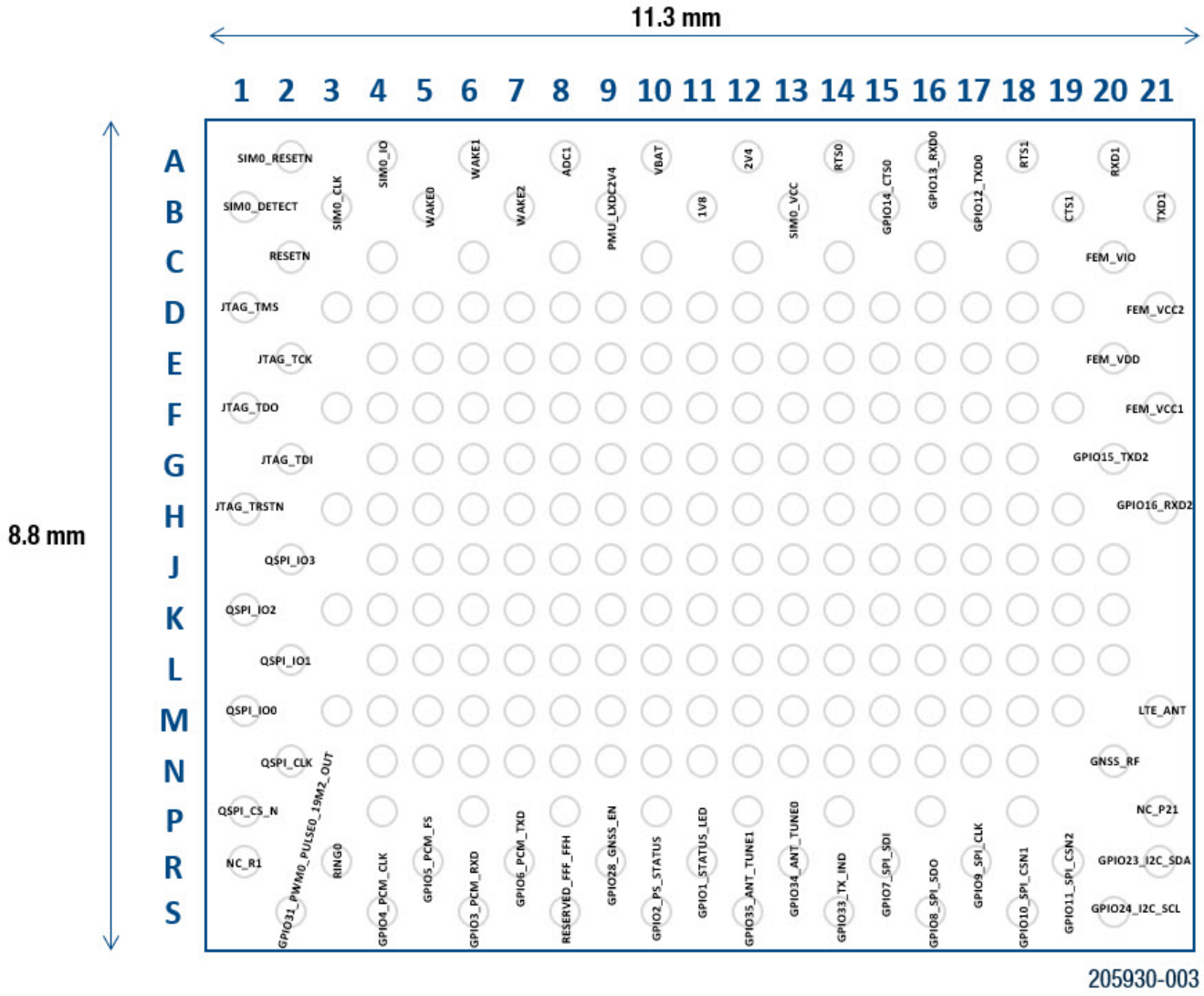

Figure 3. SKY66431-11 Signal Pin Assignments (Top View)

Table 1: SKY66431-11 Signal Pin Assignments and Functional Pin Descriptions

Color Coding Legend for Table 1

Group 1 – Interfaces									Group 2	Group 3	Group 4
JTAG	CLK	UART0	UART1	UART2	QSPI	MSSPI	I2C	SCI	PMU	RF	VBATT

Ball ID	Ball Name	Default Function	Power Group	Direction set after boot up	Pad type	State@Reset	State@deep-sleep	Alt Functions
A2	SIM0_RESETN	SIM0_RESETN	PVDD_1V8	Out	BIDIR	Out-0, 2mA	High Z	
A4	SIM0_IO	SIM0_IO	PVDD_1V8	In/Out	BIDIR	High Z, 2mA	High Z	
A6	WAKE1	Wake 1x input line, disabled by default.	PMU_5V	In	IN	High Z	High Z	
A8	ADC1	Analog Digital Converter		N/A	In	IN	High Z	
A10	VBAT	Main supply						
A12	2V4	2.4 V DC-DC						
A14	RTS0	RTS for UART0, Wake Signal, enabled by default.	PMU_5V	In	IN	High Z	High Z	
A16	GPIO13_RXD0	RXD for UART0	PVDD_1V8	Out	BIDIR	Out-1, 2mA	High Z	GPIO13
A18	RTS1	RTS for UART1, Wake Signal, enabled by default.	PMU_5V	In	IN	High Z	High Z	
A20	RXD1	RXD for UART1	PVDD_1V8	Out	BIDIR	Out-1, 2mA	High Z	
B1	SIM0_DETECT	SIM0_DETECT	PMU_5V	In	IN	High Z	High Z	
B3	SIM0_CLK	SIM0_CLK	PVDD_1V8	Out	BIDIR	Out-0, 2mA	High Z	
B5	WAKE0	Wake 0x input line, disabled by default.	PMU_5V	In	IN	High Z	High Z	
B7	WAKE2	Wake 2x input line, disabled by default.	PMU_5V	In	IN	High Z	High Z	
B9	PMU_LXDC2V4	2.4 DC-DC switching node to external L						

Color Coding Legend for Table 1

Group 1 – Interfaces									Group 2	Group 3	Group 4
JTAG	CLK	UART0	UART1	UART2	QSPI	MSSPI	I2C	SCI	PMU	RF	VBATT

Ball ID	Ball Name	Default Function	Power Group	Direction set after boot up	Pad type	State@Reset	State@deep-sleep	Alt Functions
B11	1V8	1.8 V reference voltage for I/Os. It can be used to provide power to small devices (100 mA max). This voltage is not available when the modem is in Deep Sleep mode. When the modem is in standby the voltage drops to 1.62 V per Table 3.						
B13	SIM0_VCC	SIM supply	PVDD_1V8	Out	Supply	Out-0, 2mA	High Z	
B15	GPIO14_CTS0	CTS for UART0	PVDD_1V8	Out	BIDIR	Out-1, 2mA	High Z	GPIO14
B17	GPIO12_TXD0	TXD for UART0	PVDD_1V8	In	BIDIR	High Z, 2mA	High Z	GPIO12
B19	CTS1	CTS for UART1	PVDD_1V8	Out	BIDIR	Out-1, 2mA	High Z	
B21	TXD1	TXD for UART1	PVDD_1V8	In	BIDIR	High Z, 2mA	High Z	
C2	RESETN	Module HW reset signal. Active Low. This pin has an internal pull-up.	PMU_5V	In	IN	In, Pull-up	High Z	
C20	FEM_VIO	Interface DC supply for FEM	PVDD_1V8					
D1	JTAG_TMS	JTAG_TMS	PVDD_1V8	In	IN	In, Pull-up	High Z	
D21	FEM_VCC2	PA Stage 2 supply for FEM						
E2	JTAG_TCK	JTAG_TCK	PVDD_1V8	In	IN	In, Pull-down Schmitt-trigger	High Z	
E20	FEM_VDD	DC supply for FEM						
F1	JTAG_TDO	JTAG_TDO	PVDD_1V8	Out	BIDIR	Out, 0	High Z	
F21	FEM_VCC1	PA Stage 1 supply for FEM						
G2	JTAG_TDI	JTAG_TDI	PVDD_1V8	In	IN	In, Pull-up	High Z	
G20	GPIO15_TXD2	TXD for UART2	PVDD_1V8	In	BIDIR	High Z, 2mA	High Z	GPIO15
H1	JTAG_TRSTN	JTAG_TRSTN	PVDD_1V8	In	IN	In, Pull-down	High Z	
H21	GPIO16_RXD2	RXD for UART2	PVDD_1V8	Out	BIDIR	Out-1, 2mA	High Z	GPIO16
J2	QSPI_IO3	Quad SPI data #3	PVDD_1V8	In	BIDIR	High Z	High Z	

Color Coding Legend for Table 1

Group 1 – Interfaces									Group 2	Group 3	Group 4
JTAG	CLK	UART0	UART1	UART2	QSPI	MSSPI	I2C	SCI	PMU	RF	VBATT

Ball ID	Ball Name	Default Function	Power Group	Direction set after boot up	Pad type	State@Reset	State@deep-sleep	Alt Functions
K1	QSPI_IO2	Quad SPI data #2	PVDD_1V8	In	BIDIR	High Z	High Z	
L2	QSPI_IO1	Quad SPI data #1	PVDD_1V8	In	BIDIR	High Z	High Z	
M1	QSPI_IO0	Quad SPI data #0	PVDD_1V8	In	BIDIR	High Z	High Z	
M21	LTE_ANT	Main antenna, for Rx and Tx						
N2	QSPI_CLK	Quad SPI clock	PVDD_1V8	In	BIDIR	High Z	High Z	
N20	GNSS_RF	GNSS RF front-end Input						
P1	QSPI_CS_N	Quad SPI chip select	PVDD_1V8	In	BIDIR	High Z	High Z	
P21	NC_P21	No connect						
R1	NC_R1	No connect						
R3	RING0	UART0 ring line (RING0, OUT). Enabled by default with inversed polarity.	PVDD_1V8	Out	BIDIR	High Z, 2mA	High Z	
R5	GPIO5_PCM_FS	GPIO5	PVDD_1V8	In	BIDIR	High Z	High Z	PCM_FS
R7	GPIO6_PCM_TXD	GPIO6	PVDD_1V8	In	BIDIR	High Z	High Z	PCM_TXD
R9[1]	GPIO28_GNSS_EN	Reserved	PVDD_1V8	Out	BIDIR	High Z	High Z	DTR0
R11	GPIO1_STATUS_LED	Status LED	PVDD_1V8	Out	BIDIR	High Z, 2mA	High Z	GPIO1
R13	GPIO34_ANT_TUNE0	Antenna tuning	PVDD_1V8	Out	BIDIR	High Z, 2mA	High Z	GPIO34
R15	GPIO7_SPI_SDI	GPIO7	PVDD_1V8	In	BIDIR	High Z	High Z	SPI_SDI
R17	GPIO9_SPI_CLK	GPIO9	PVDD_1V8	In	BIDIR	High Z	High Z	SPI_CLK
R19	GPIO11_SPI_CSN2	GPIO11	PVDD_1V8	In	BIDIR	High Z	High Z	SPI_CSN2
R21	GPIO23_I2C_SDA	GPIO23	PVDD_1V8	In	BIDIR	High Z	High Z	I2C_SDA
S2	GPIO31_PWM0_PULSE0_19M2_OUT	GPIO31	PVDD_1V8	In	BIDIR	High Z	High Z	PWM0/ PULSE0/ 19M2_OUT
S4	GPIO4_PCM_CLK	GPIO4	PVDD_1V8	In	BIDIR	High Z	High Z	PCM_CLK
S6	GPIO3_PCM_RXD	GPIO3	PVDD_1V8	In	BIDIR	High Z	High Z	PCM_RXD
S8	FFF_FFH	RESERVED. Boot mode selection (FFF_FFH, IN). This pad needs a pull-down resistor by default.	PVDD_1V8		BIDIR			

Color Coding Legend for Table 1

Group 1 – Interfaces									Group 2	Group 3	Group 4
JTAG	CLK	UART0	UART1	UART2	QSPI	MSSPI	I2C	SCI	PMU	RF	VBATT

Ball ID	Ball Name	Default Function	Power Group	Direction set after boot up	Pad type	State@Reset	State@deep-sleep	Alt Functions
S10	GPIO2_PS_STATUS	Power Saving Status (PS_STATUS, OUT), enabled by default, active high.	PVDD_1V8	Out	BIDIR	High Z, 2mA	High Z	GPIO2
S12	GPIO35_ANT_TUNE1	Antenna tuning	PVDD_1V8	Out	BIDIR	High Z, 2mA	High Z	GPIO35
S14	GPIO33_TX_IND	Transmission indicator (TX_IND, OUT), active high.	PVDD_1V8	Out	BIDIR	High Z, 2mA	High Z	GPIO33
S16	GPIO8_SPI_SDO	GPIO8	PVDD_1V8	In	BIDIR	High Z	High Z	SPI_SDO
S18	GPIO10_SPI_CSN1	GPIO10	PVDD_1V8	In	BIDIR	High Z	High Z	SPI_CSN1
S20	GPIO24_I2C_SCL	GPIO24	PVDD_1V8	In	BIDIR	High Z	High Z	I2C_SCL

[1]This signal is RESERVED and cannot be used as GPIO. After boot, this pin is driven to logic 1 by default to select LTE Mid-Band RX path. It is automatically driven to logic 0 whenever GNSS path is selected by software.

All pins not listed are ground pins.

UART Expected Use

SKY66431 has three UARTs. While the function of the UARTs can be configured, the default function for each UART is as follows

- UART0: data and control from external MCU via AT commands
- UART1: Debug and upgrade interface
- UART2: Modem consol.

Figure 4 represents the typical implementation for the hardware flow control for UART0, UART1, and UART2. TXD and RXD signals are mandatory.

- Port TXD on the Application send data to the SKY66431 TXD signal line
- Port RXD on the Application receives data from the SKY66431 RXD signal line.

CTS0 and CTS1 are flow control signals for UART0 and UART1, Clear-To-Send, active low. They should be connected to the CTS of the remote UART device. If hardware flow control is not used, leave CTS unconnected.

RTS0 and RTS1 are flow control signals for UART0 and UART1, Ready-To-Send, active low. They should be connected to the RTS of the remote UART device. If flow control is not used, include a 1Kohm pull-down on the RTS pin.

If the SKY66431 is connected to an external component (like an RS232 driver), be sure the added component will present a logic low to the SKY66431-11.

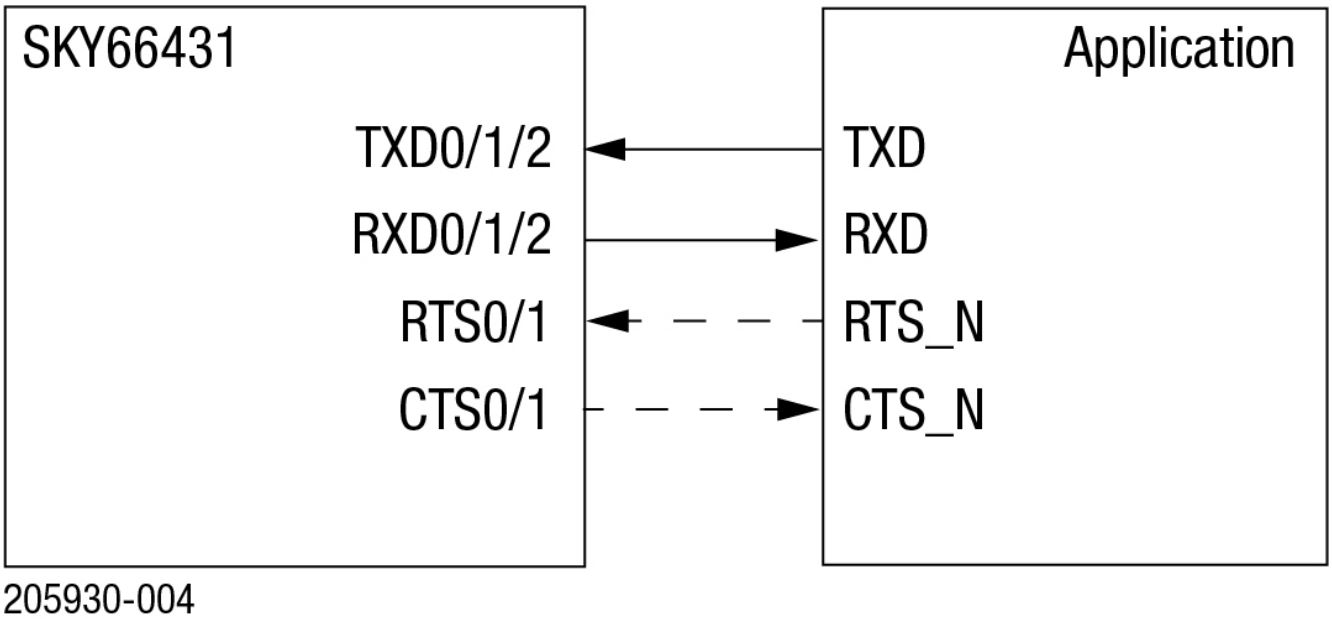

Figure 4. UART0, UART1, and UART2 Signals Convention and Flow Control

Electrical and Mechanical Specifications

The absolute maximum ratings of the SKY66431-11 are shown in Table 2. Recommended operating conditions of the SKY66431-11 are provided in Table 3. Other SIP electrical specifications are shown in the tables that follow.

Table 2: SKY66431-11 Absolute Maximum Ratings[1]

Parameter	Symbol	Min	Typ	Max	Units
Supply voltages (with RF)	V_{BATT}	-0.2		5.5	V
Operating case temperature	T_{CASE}[2]	-40	25	+85	°C
Storage temperature	T_{STG}	-40		+150	°C
Electrostatic discharge:					
Human Body Model (HBM)	ESD		1000		V

[1]Exposure to maximum rating conditions for extended periods may reduce device reliability. There is no damage to device with only one parameter set at the limit and all other parameters set at or below their nominal value. Exceeding any of the limits listed here may result in permanent damage to the device.
[2]TCASE refers to the temperature of the ground pad on the underside of the package.

ESD Handling: *Industry-standard ESD handling precautions must be adhered to at all times to avoid damage to this device.*

Table 3: SKY66431-11 Recommended Operating Conditions

Parameter	Symbol	Min	Typ	Max	Units
Supply voltage	VBATT	3.3 (3GPP Compliant) 2.8 V (Operational)	3.8	5.5	V
	FEM_VDD	2.95 (3GPP Compliant) 2.4 V (Operational)	3.1		V
	FEM_VCC1	2.95 (3GPP Compliant) 2.4 V (Operational)	3.1		V
	FEM_VCC2	2.95 (3GPP Compliant) 2.4 V (Operational)	3.1		V
	SIM0_VCC	1.62	1.8		V
Case operating temperature range	T_{RANGE}	-40	+25	+85	°C

Table 4: SKY66431-11 Power Consumption Electrical Specifications

(VBATT = 3.8 V, FEM_VDD = FEM_VCC1 = FEM_VCC2 = 3.1 V, TCASE = +25°C, QPSK/5 MHz BW / 6RB (MPR = 0), Unless Otherwise Specified)					
Power Consumption	**Test Condition**	**Min**	**Typ**	**Max**	**Units**
TX Peak Current[1]					
Itotal_13dBm	B13 uplink, CW, POUT = +13 dBm		220		mA
Itotal _18dBm	B13 uplink, CW, POUT = +18 dBm		280		mA
Itotal_20dBm	B13 uplink, CW, POUT = +20 dBm		320		mA
Itotal_23dBm	B13 uplink, CW, POUT = +23 dBm		400		mA
	B13 uplink, modulated, average over 1 ms, max throughput		400		mA
Idle Mode Current[3]					
I_IDLE_1.28s			3.2		mA
eDRX Mode Current[2, 3]					
I_eDRX_81.92s			55		uA
PSM Sleep Current[3]					
I_LEAK	System current before wake-up from PSM or eDRX		1		uA

[1]Listed as measured peak current consumption in LTE TX/RX configurations CW mode. It represents the maximum RMS current. Actual power consumption depends on LTE band of operation and duty cycle. Table 4 listed for LTE band 13 only
[2]Paging Time Window (PTW) set at 1.28 s (one PO in the PTW)
[3]Current is firmware version dependent and for guidance only

Table 5: SKY66431-11 Low-Band TX Electrical Specifications[1]

(VBATT = 3.8 V, FEM_VDD = FEM_VCC1 = FEM_VCC2 = 3.1 V, TCASE = +25 °C, LTE Low-Band, f = 782 MHz, QPSK/5 MHz BW/6RB, Unless Otherwise Specified)							
Parameter		**Symbol**	**Conditions**	**Min**	**Typ**	**Max**	**Units**
Frequency		f		698		915	MHz
Maximum output power		POUT_MAX			23		dBm
Power variation		Error_POUT_MAX_TRANGE	POUT = POUT_MAX	-2		+2	dB
Adjacent channel leakage ratio (based on 5 MHz LTE channels) 6 RB transmitted signal on RB 19 through 24	EUTRA	EUTRA_ACLR1 (power measured in adjacent 5 MHz LTE channel)	POUT = POUT_MAX		-35	-30	dBc
			TCASE = TRANGE		-35	-30	
	UTRA1	UTRA_ACLR1 (power measured in adjacent 3.84 MHz UTRA channel)	POUT = POUT_MAX		-35	-30	
			TCASE = TRANGE		-35	-30	
Modulation accuracy		EVM_QPSK	Load = 50 ohms, TCASE = TRANGE POUT = POUT_MAX		5	7	%
Harmonics	Second	2fo	POUT = POUT_MAX Modulation = QPSK/5 MHz/1RB		-40	-30	dBm/MHz
	Second (B13)	2fo			-48	-40	
	Second (B28)	2fo			-40	-38	
	Third	3fo			-40	-35	
	Third (B28)	3fo			-40	-36	
	Fourth and higher	4fo			-65	-35	
Noise during B12 TX	LB (B12) noise in B12 RX band	PNOISE_Emissions_Bands	fMEAS = 729 MHz[1]		-60		dBm/MHz
	LB (B12) noise in B17 RX band		fMEAS = 734 MHz[1]		-60		
	LB (B12) noise in GPS Band		fMEAS = 1574.42 to 1576.42 MHz[1]		-75		
	LB (B12) noise in GNSS band		fMEAS = 1559.00 MHz to 1574.42 MHz[1] fMEAS = 1576.42 MHz to 1610.00 MHz[1]		-75 -75		
Noise during B13 TX	LB (B13) noise in B13 RX band	PNOISE_Emissions_Bands	fMEAS = 756 MHz[2]		-65		dBm/MHz
	LB (B13) noise in B14 RX band		fMEAS = 768 MHz[2]		-60		
	LB (B13) noise in public safety (NS_07)		fMEAS = 775 MHz[3]		-60		
	LB (B13) noise in GPS Band		fMEAS = 1574.42 to 1576.42 MHz[4]		-75		
	LB (B13) noise in GNSS band		fMEAS = 1559.00 MHz to 1574.42 MHz[4] fMEAS = 1576.42 MHz to 1610.00 MHz[4]		-44 -75		
ANT port return loss		RL_ANT	POUT = 0 dBm		5		dB
Stability		S	No oscillations, all spurious[5] < -36 dBm/100 kHz @ 30 MHz ~1 GHz < -30 dBm/MHz @ 1 GHz ~12.5 GHz		6:1		VSWR
Ruggedness		Ru	No permanent damage to module. Tested with CW signal, VBAT = VBAT_MAX POUT = POUT_MAX @ Load = 50 ohms TCASE = TRANGE		10:1		VSWR

[1]Measured with +23 dBm TX on 5 MHz LTE channel centered at 713.5 MHz, highest 6 RB
[2]Measured with +23 dBm TX on 5 MHz LTE channel centered at 779.5 MHz, lowest 6 RB
[3]Measured with +20 dBm TX on 10 MHz LTE channel centered at 782 MHz, 6RB, position 1
[4]Measured with +23 dBm TX on 5 MHz LTE channel centered at 784.5 MHz, highest 6RB
[5]Tested with CW signal. POUT = POUT_MAX at matched load

Table 6: SKY66431-11 Mid-Band TX Electrical Specifications

(VBATT = 3.8 V, FEM_VDD = FEM_VCC1 = FEM_VCC2 = 3.1 V, TCASE = +25 °C, LTE Mid-band, f = 1732 MHz, QPSK/5 MHz BW/6RB, Unless Otherwise Specified)							
Parameter		**Symbol**	**Conditions**	**Min**	**Typ**	**Max**	**Units**
Frequency		f		1710		1980	MHz
Maximum output power		POUT_MAX			23		dBm
Power variation		Error_POUT_MAX_TRANGE	POUT = POUT_MAX	-2		2	dB
Adjacent channel leakage ratio (based on 5 MHz LTE channels)	EUTRA	EUTRA_ACLR1 (power measured in adjacent 5 MHz LTE channel)	POUT = POUT_MAX		-35	-30	dBc
			TCASE = TRANGE		-35	-30	
6 RB transmitted signal on RB 19 through 24	UTRA1	UTRA_ACLR1 (power measured in adjacent 3.84 MHz UTRA channel)	POUT = POUT_MAX		-35	-30	dBc
			TCASE = TRANGE		-35	-30	
Modulation accuracy		EVM_QPSK	Load = 50 ohms, TCASE = TRANGE POUT = POUT_MAX		5	7	%
Harmonics	Second	2fo	Modulation = QPSK/5 MHz/1RB		-40	-30	dBm/MHz
	Third	3fo			-40	-30	
	Fourth and higher	4fo			-40	-30	
Noise	Noise in B4 RX band	PNOISE_Emissions_Bands	fMEAS = 2110 MHz[1]		-50		dBm/MHz
	Noise in GPS Band		fMEAS = 1574.42 to 1576.42 MHz[2]		-70		
	Noise in GNSS band		fMEAS = 1559.00 MHz to 1574.42 MHz[2] fMEAS = 1576.42 MHz to 1610.00 MHz[2]		-70		
ANT port return loss		RL_ANT	POUT = 0 dBm		5		dB
Stability		S	No oscillations, all spurious[3] < -36 dBm/100 kHz @ 30 MHz ~1 GHz < -30 dBm/MHz @ 1 GHz ~12.5 GHz TCASE = TRANGE	6:1			VSWR
Ruggedness		Ru	No permanent damage to module[4] POUT = POUT_MAX @ Load = 50 ohms TCASE = TRANGE	10:1			VSWR

[1]Measured with +23 dBm TX on 5 MHz LTE channel centered at 1752.5 MHz, highest 6 RB
[2]Measured with +23 dBm TX on 5 MHz LTE channel centered at 1712.5 MHz, lowest 6 RB
[3]Tested with CW signal. POUT = POUT_MAX at matched load
[4]Tested with CW signal, VBAT = VBAT_MAX

Table 7: SKY66431-11 Low-Band and Mid-Band RX Electrical Specifications

(VBATT = 3.8 V, FEM_VDD = FEM_VCC1 = FEM_VCC2 = 3.1V, TCASE = +25 °C, Unless Otherwise Specified)						
Parameter	**Symbol**	**Conditions**	**Min**	**Typ**	**Max**	**Unit**
Low-Band						
Operating frequency	f		728		960	MHz
ANT port return loss	RL_ANT	In/Out, 50 ohms, 728 to 960 MHz		10		dB
Cat-M1 sensitivity	Sensi_LB			-106		dBm
Mid-Band						
Operating frequency	f		1805		2200	MHz
ANT port return loss	RL_ANT	In/Out, 50 ohms, 1805 to 2200 MHz		10		dB
Cat-M1 Sensitivity	Sensi_MB			-105		dBm

Evaluation Board Description

The SKY66431-11 Evaluation Board, shown in Figure 5, is used to test the performance of the SKY66431-11 SiP. Contact Skyworks or Sequans for the “NEKTAR SKY66431-11 SiP Evaluation Board User Manual.”

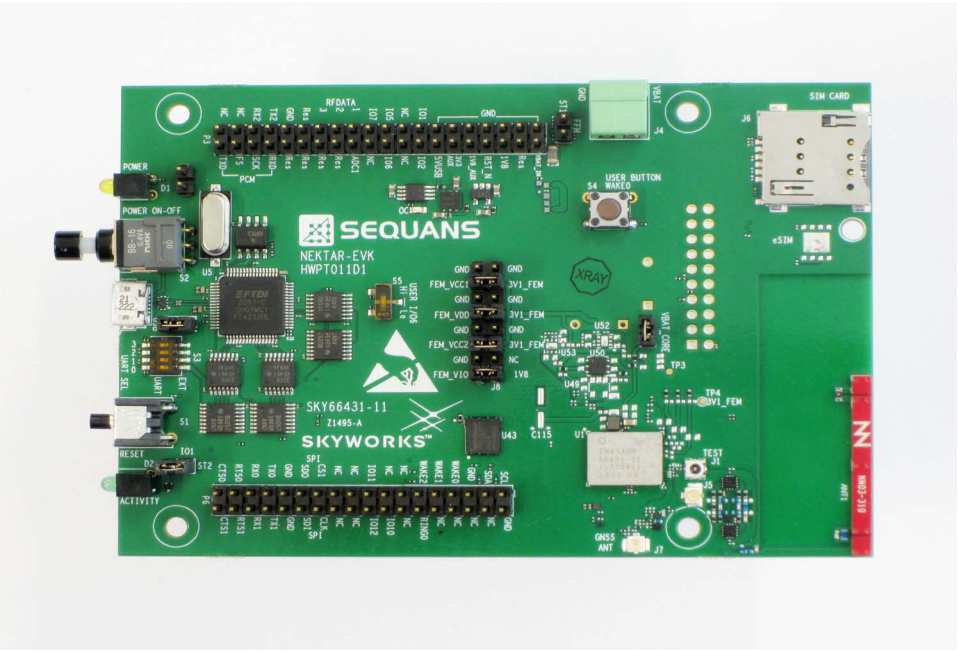

Figure 5. SKY66431-11 Evaluation Board

Application Reference Schematic

Application reference schematic diagrams are provided below for easy implementation. Table 9 lists the Bill of Materials (BOM) for the application reference schematic.

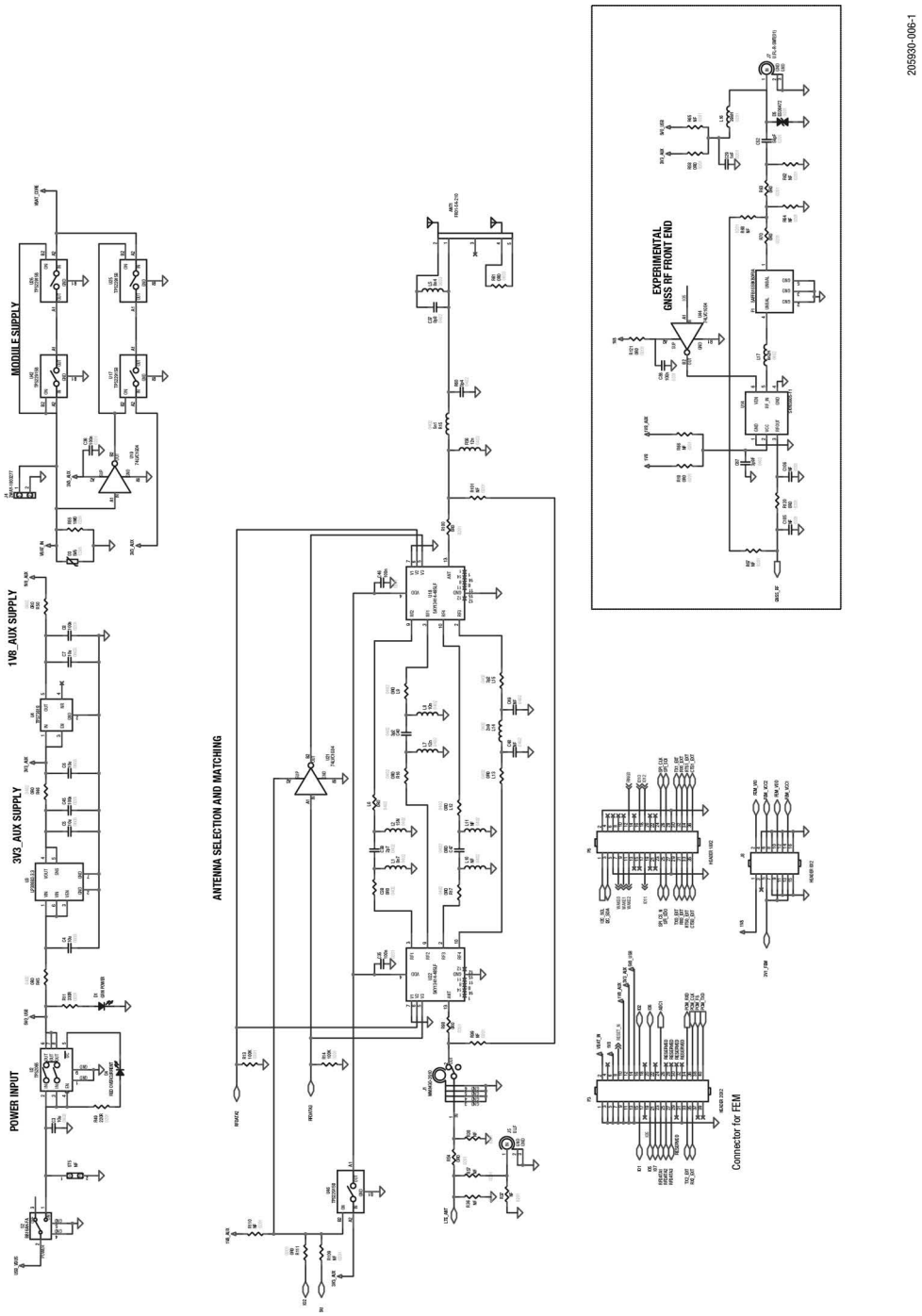

Figure 6. SKY66431-11 Application Reference Schematic

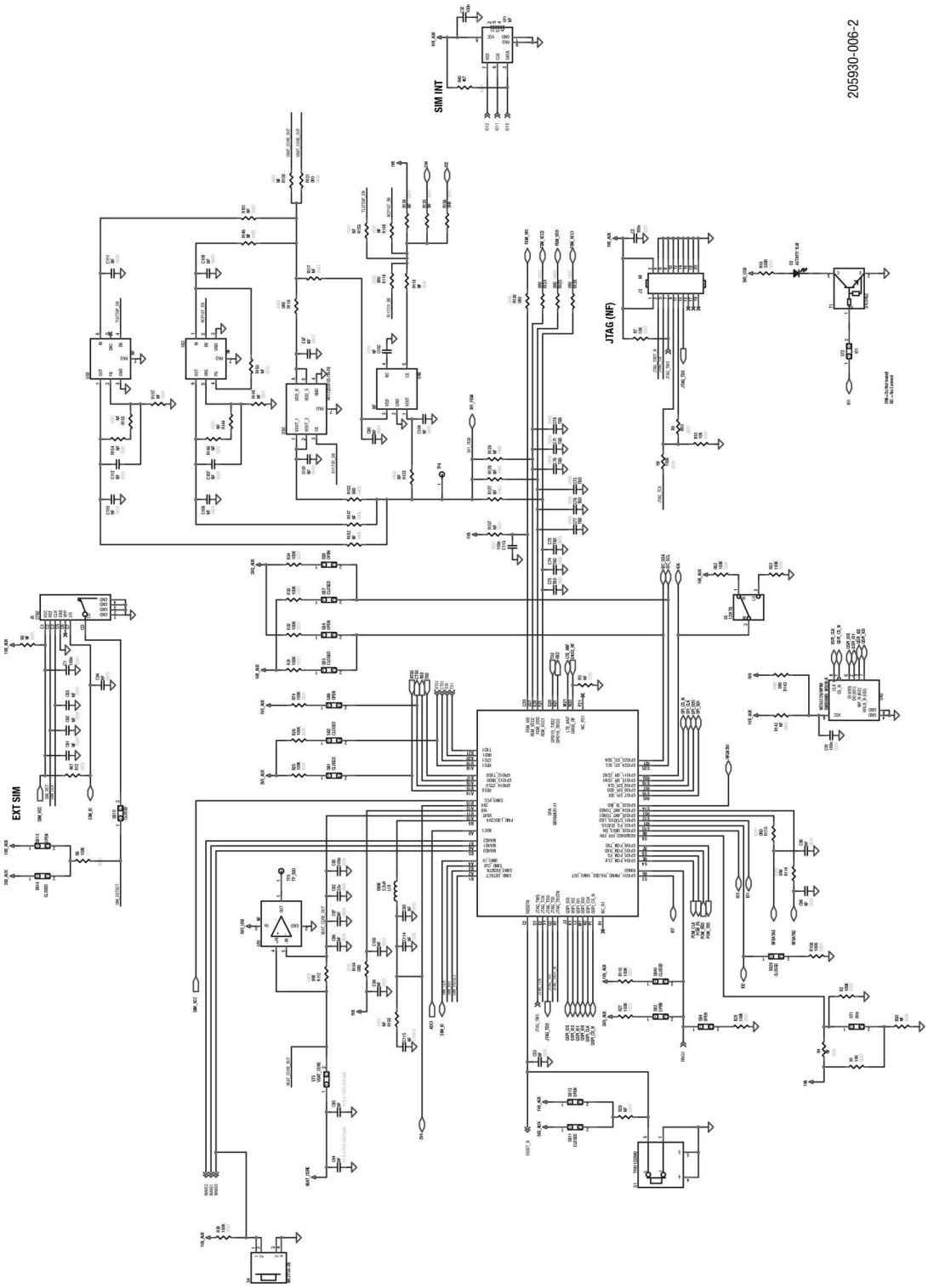

Figure 7. Application Reference Schematic 2

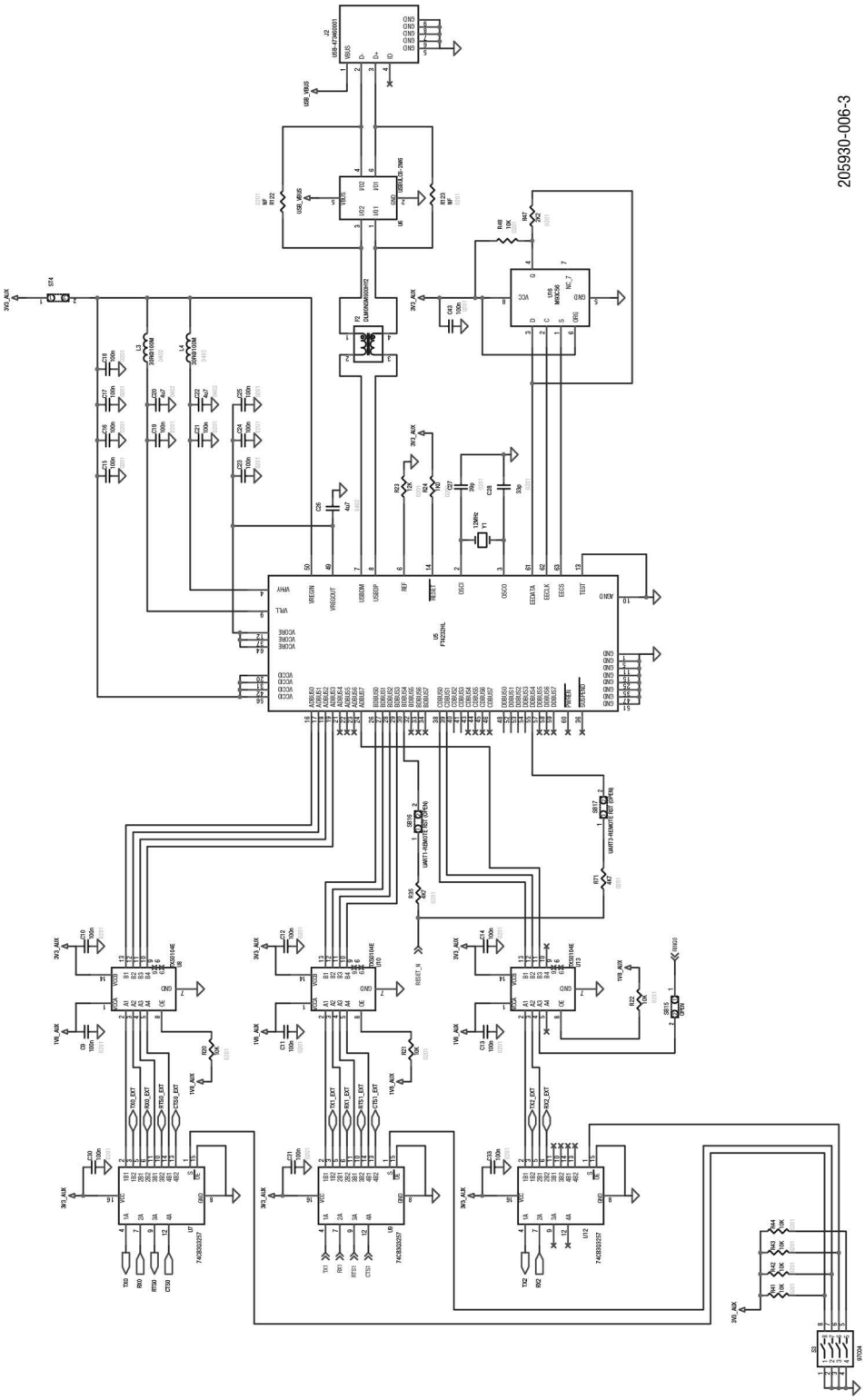

Figure 8. SKY66431-11 Application Reference Schematic 3

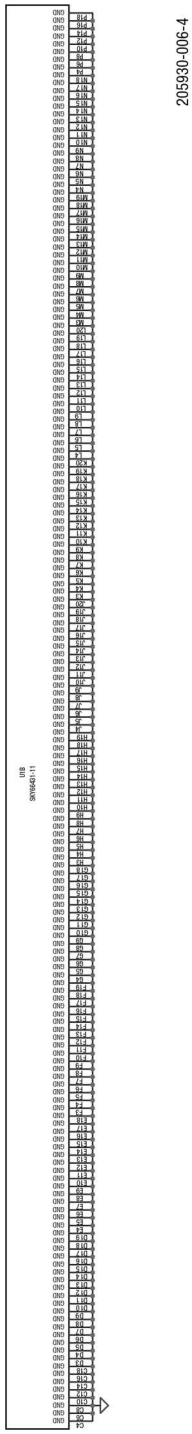

Figure 9. Application Reference Schematic 4

Table 8: SKY66431-11 Application Schematic Bill of Materials (BOM)

Qty	Reference	Value	Manufacturer	Part Number	Package	Description
1	ANT1	FR01-S4-210	Fractus Antennas	RUN mXTEND (FR01-S4-210)	SMD-30.0 x 3.0 x 1.0 mm	698 to 960 and 1710 to 2690 MHz
31	C1, C2, C8, C9, C10, C11, C12, C13, C14, C15, C16, C17, C18, C19, C21, C23, C24, C25, C30, C31, C32, C33, C35, C36, C43, C45, C46, C81, C83, C88, C113	100 nF	Murata	GRM033B31C104ME84	0201	Multilayer ceramic
5	C3, C4, C5, C6, C7	10 uF	Murata	GRM188R60J106ME47D	0603	General purpose ceramic capacitor
3	C20, C22, C26	4u7	Panasonic	ECJ-0EB0J475M	0402	Ceramic X5R
1	C27	39 pF	Murata	GRM0332C2A390JA01	0201	Multilayer ceramic
1	C28	33 pF	Murata	GRM0332C1H330JA01	0201	Multilayer ceramic
1	C29	1 nF	Murata	GRM033R71H102KA12	0201	Ceramic X7R, 10%, 50 V
1	C37	0p8	Murata	GJM1555C1HR80WB01	0402	Ceramic COG
16	L6, L9, L12, L13, R16, R17, C38, R45, R46, C47, R50, R112, R124, R125, R126, R143	0R0	Panasonic	ERJ2GE0R00	0402	Thick film chip resistor
1	C39	2p7	Murata	GJM1555C1H2R7BB01D	0402	Ceramic COG
2	L15, C40	3p2	Murata	GJM1555C1H3R2BB01D	0402	Ceramic COG
2	C44, C85	NF	Eaton	PB-5R0H104-R	11.3 x 13.0 x 6.0 mm	AL EL, radial low ESR
15	L10, L11, C48, C49, R117, R127, R128, R129, R130, R133, R142, R146, R147, R151, R152	NF			0402	
1	C52	56 pF	Murata	GRM0335C1E560JD01	0201	Multilayer ceramic
44	R3, R4, R6, R29, R30, R36, R37, R38, C53, R57, R62, R64, R65, R66, R68, C91, C92, C93, C94, C95, C96, R99, C99, C100, R101, C105, C106, C107, R109, R110, C112, R118, R134, R135, R137, R144, R145, R148, R149, R150, R153, R154, R155, R157	NF			0201	
1	C67	3p9F	Murata	GRM1555C1E3R9CA01D	0402	Capacitor
3	C71, C72, C73	TBD			0603	
6	C74, C75, C76, C77, C78, C79	TBD			0402	
11	C80, C86, C87, C90, C97, C101, C104, C108, C109, C110, C111	NF			0603	
1	C82	22 uF	Murata	GRM187R61A226ME15D	0603	Murata
1	C102	NF			0201	Multilayer ceramic
1	C114	NF	AVX	1206YC105KAT4A	1206	CAP, 1.0 uF, 1206, X7R, 16 V, 10%, ROHS
1	C115	NF	Chemi-Con	HHXC160ARA220AE61G	5.3 x 5.8	Cap, hybrid poly AL EL, 22 uF, ±20%, 16 V, 125 C

Table 8: SKY66431-11 Application Schematic Bill of Materials (BOM) (Continued)

Qty	Reference	Value	Manufacturer	Part Number	Package	Description
1	D1	GRN POWER	MARL	103-314-04	PTH R/A	3 mm/T1
1	D2	ACTIVITY YLW	MARL	103-311-04	PTH R/A	3 mm/T1
1	D3	5V6	AVX	VC120605D150DP	1206	Transguard
1	D4	Red overcur-rent	Kingbright	KP-1608EC	0603	SMD 1.1 mm high
1	D5	ESD8472	On-Semi	ESD8472MUT5G	0201	ESD protection
1	F1	SAFFB1G58KB 0F0A	Murata	SAFFB1G58KB0F0A	SMD 1.105 mm x 0.90 mm	SAW GPS+COMPASS+GLON-ASS
1	F2	DLM0NSM900 HY2	Murata	DLM0NSM900HY2	SMD 1.105 mm x 0.90 mm	Filter
1	J1	MM8430-2610	Murata	MM8430-2610B	SMD straight	Coax switched
1	J2	USB-473460001	Molex	473460001	SMD	5WAY SOCKET USB TYPE MICRO-B
1	J3	NF	3M	N2520-6002	PTH 10x2 0.1"-pitch	20WAY HEADER IDC VERTI-CAL
1	J4	2WAY-1803277	Phoenix Contact	1803277	PTH 3.81 mm-pitch	2WAY FEMALE TERM' BLOCK HORIZONTAL
1	J5	U.LF	Hirose	U.FL-R-SMT(01)	SMD straight	CO-AX SOCKET
1	J6	C792	Mup	MUP-C792	MICROSIM	MICRO SIM(3FF) 6 WAY + DETECT
1	J7	U.FL-R-SMT(01)	Hirose	U.FL-R-SMT(01)	SMD straight	CO-AX SOCKET
1	J8	HEADER 8X2	Sullins Connector Solutions	PRPC008DFAN-RC	0.100	"Header
1	L1	8n7	Murata	LQW15AN8N7G8ZD	0402	WIREWOUND
1	L2	15N	Murata	LQW15AN15NG8ZD	0402	WIREWOUND
2	L3, L4	30R @ 100M	Wurth	74279274	0402	FERRITE BEAD
1	L5	8n4	Murata	LQW18AN8N4G8ZD	0603	WIREWOUND
2	L7, R56	12 nF	Murata	LQW15AN12NG00	0402	WIREWOUND
1	L8	10 nF	Murata	LQW15AN10NG00	0402	WIREWOUND
1	L14	2n9	Murata	LQW15AN2N9G8ZD	0402	WIREWOUND
1	L16	39 nH	Murata	LQP03TN39NJ02	0201	FILM, 5% tolerance, 120mA
1	L17	6n2H	Murata	LQW15AN6N2C00D	0402	Wire-wound HiQ inductor
1	L18	2.2 uH	Taiyo Yuden	MEKK2016H2R2M	0806	Metal Wire-wound Chip Power Inductors
1	PCB1	Z1495-A	Skyworks	Z1495-A		Bare PCB
1	P3	HEADER 20X2	SAMTEC	TSW-120-14-F-D	PTH 20 x 2 0.1"-pitch	40WAY HEADER DIL VERTI-CAL
1	P6	HEADER 18X2	SAMTEC	TSW-118-14-F-D	PTH 15 x 2 0.1"-pitch	36WAY HEADER DIL VERTI-CAL
11	R1, R7, R10, R20, R21, R22, R41, R42, R43, R44, R48	10k	Panasonic	ERJ1GEJ103	0201	Thick film chip resistor
18	R2, R5, R13, R14, R25, R26, R27, R28, R31, R32, R33, R34, R39, R52, R53, R74, R108, R115	100k	Panasonic	ERJ1GEJ104	0201	Thick film chip resistor
1	R8	100R	Panasonic	ERJ1GEJ101	0201	Thick film chip resistor
15	R9, R18, R54, R58, R63, R70, R98, R100, R104, R111, R113, R114, R120, R121, R138	0R0	Panasonic	ERJ1GE0R00	0201	Thick film chip resistor
2	R11, R19	330R	Panasonic	ERJ1GEJ331	0201	Thick film chip resistor
4	R12, R35, R40, R71	4K7	Panasonic	ERJ1GEJ472	0201	Thick film chip resistor

Table 8: SKY66431-11 Application Schematic Bill of Materials (BOM) (Continued)

Qty	Reference	Value	Manufacturer	Part Number	Package	Description
1	R15	5n1	Murata	LQW15AN5N1C00	0402	Wirewound
1	R23	12K	Panasonic	ERJ1GEJ123	0201	Thick film chip resistor
1	R24	1K0	Panasonic	ERJ1GEJ102	0201	Thick film chip resistor
1	R47	2K2	Panasonic	ERJ1GEJ222	0201	Thick film chip resistor
1	R49	220R	Panasonic	ERJ1GEJ221	0201	Thick film chip resistor
1	R55	1M0	Panasonic	ERJ1GEJ105	0201	Thick film chip resistor
1	R60	0p4	Murata	GJM1555C1HR40WB01	0402	Ceramic COG
1	R61	0R0	Panasonic	ERJ3GEY0R00	0603	
1	R67	NF	Panasonic		0201	
3	R116, R131, R132	0R0	Panasonic	ERJ2GE0R00	0402	
2	R119, R136	0R0	Panasonic	ERJ1GE0R00	0201	
2	R122, R123	NF			0201	Thick film chip resistor
1	R158	NF			0402	Thick film chip resistor
9	SB1, SB2, SB5, SB7, SB10, SB11, SB14, SB26, SB40	CLOSED	NONE		1.00 mm dia.	Solder bridge
8	SB3, SB4, SB6, SB8, SB9, SB12, SB13, SB15	OPEN	NONE		1.00 mm dia.	Solder bridge
1	SB16	UART1-REMOTE RST (OPEN)	NONE		1.00 mm dia.	Solder bridge
1	SB17	UART3-REMOTE RST (OPEN)	NONE		1.00 mm dia.	Solder bridge
1	ST1	FFH	NONE		1 mm	Probe point
1	ST2	IO1	NONE		1 mm	Probe point
1	ST3	VBAT_CORE	NONE		1 mm	Probe point
1	ST4	SOL-DER_BRIDGE	NONE		1 mm	Probe point
1	ST5	NF	NONE		1 mm	Probe point
1	S1	TPA11CGRA0	Alco Switch	TPA11CGRA0	PTH side actuator	Pushbutton momentary
1	S2	BB16AH-FA	NKK Switches	BB16AH-FA	PTH side actuator	Pushbutton on-on
1	S3	97C04	Grayhill	97C04SRT	8 PIN SMD	4 pole no slide
1	S4	MCDTS6-2N	Multicomp	MCDTS6-2N	PTH top actuator	Pushbutton momentary
1	S5	1201TB	CJS	1201TB	PTH top actuator	Slide SP3T on-none-on 100 mA
2	TP3, TP4	TP_500	NONE		1 mm	Probe point
1	T1	DTC043Z	Rohm	DTC043ZM	SOT723	Digital NPN
1	U1	SKY66431-11	Skyworks	SKY66431-11	8.8 x 11.3 x 1.4 mm BGA package	5G Massive IoT System-in-Package
1	U2	TPS2065	Texas	TPS2065DGN	MSOP8	USB switch
1	U3	LP38692-3.3	Nat semi	LP38692SD-3.3	LLP-6	Voltage reg LDO 3.3 V
1	U4	TPS73618	Texas	TPS73618DBVTG4	SOT23-5	Voltage reg LDO 1.8 V
1	U5	FT4232HL	FTDI	FT4232HL-R	LQFP64	Quad HS USB to serial UART
1	U6	USBULC6-2M6	ST Microelectroics	USBULC6-2M6	uQFN-6	ESD protection
3	U7, U9, U12	74CB3Q3257	Texas	SN74CB3Q3257PWR	TSSOP16	4 bit 1 of 2 MUX/DEMUX switch
3	U8, U10, U13	TXS0104E	Texas	TXS0104EPWR	TSSOP-14	4-bit bi-dir level translator
1	U11	NF			SIM 5 mm x 6 mm	Embedded SIM
1	U14	SKY65605-11	Skyworks	SKY65605-21	DFN700X1100	BDS/GPS/GNSS Low-Noise Amplifier
1	U16	M93C56	ST Microelectroincs	M93C56	SO8	EEPROM 2K serial

Table 8: SKY66431-11 Application Schematic Bill of Materials (BOM) (Continued)

Qty	Reference	Value	Manufacturer	Part Number	Package	Description
5	U17, U25, U26, U42, U46	TPS22915B	Texas	TPS22915B	DSBGA	Uni-dir switch 2 a
2	U18, U22	SKY13414-485LF	Skyworks	SKY13414-485LF	14-pin QFN	100 MHz-3.8 GHz SP4T switch
3	U19, U21, U44	74LVC1G04	Texas	SN74LVC1G04YZV	DSBGA	Inverter
1	U43	W25Q128JW-PIM	Winbond Electronics	W25Q128JWPIM	WSON-8	NOR flash spiFlash, 128 M-bit, 4 Kb
1	U49	NF	Nisshinbo Micro Devices Inc.	R1172N311D-TR-FE		
1	U50	R1172D311D-TR-FE	Nisshinbo Micro Devices Inc.	R1172D311D-TR-FE		1 A LDO
1	U51	NF	TI	INA293B		
1	U52	NF	ON Semi	NCP187AMTWADJTAG		
1	U53	NF	TI	TLV75901PDRV		
1	Y1	12 MHz	Citizen	HCM49 12.000MABJT	HC-49/U-S	Crystal

Package Dimensions

The typical part marking for the SKY66431-11 is shown below. The PCB layout footprint for the SKY66431-11 is shown in Figure 11. Package dimensions are shown in Figure 9, and tape and reel dimensions are provided in Figure 10.

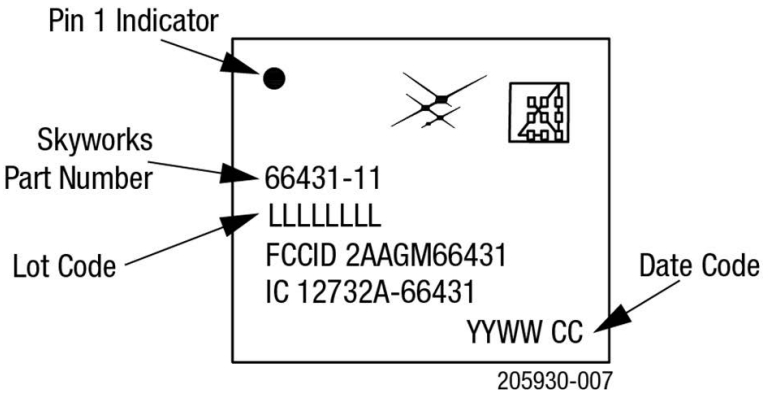

Figure 10. SKY66431-11 Typical Part Marking

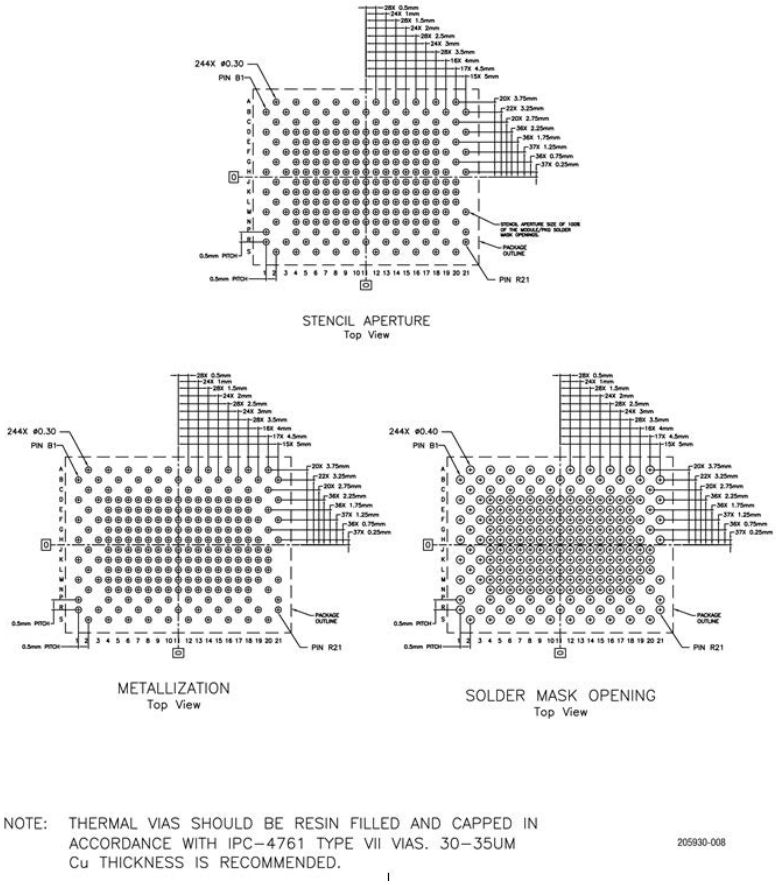

Figure 11. SKY66431-11 PCB Layout Footprint

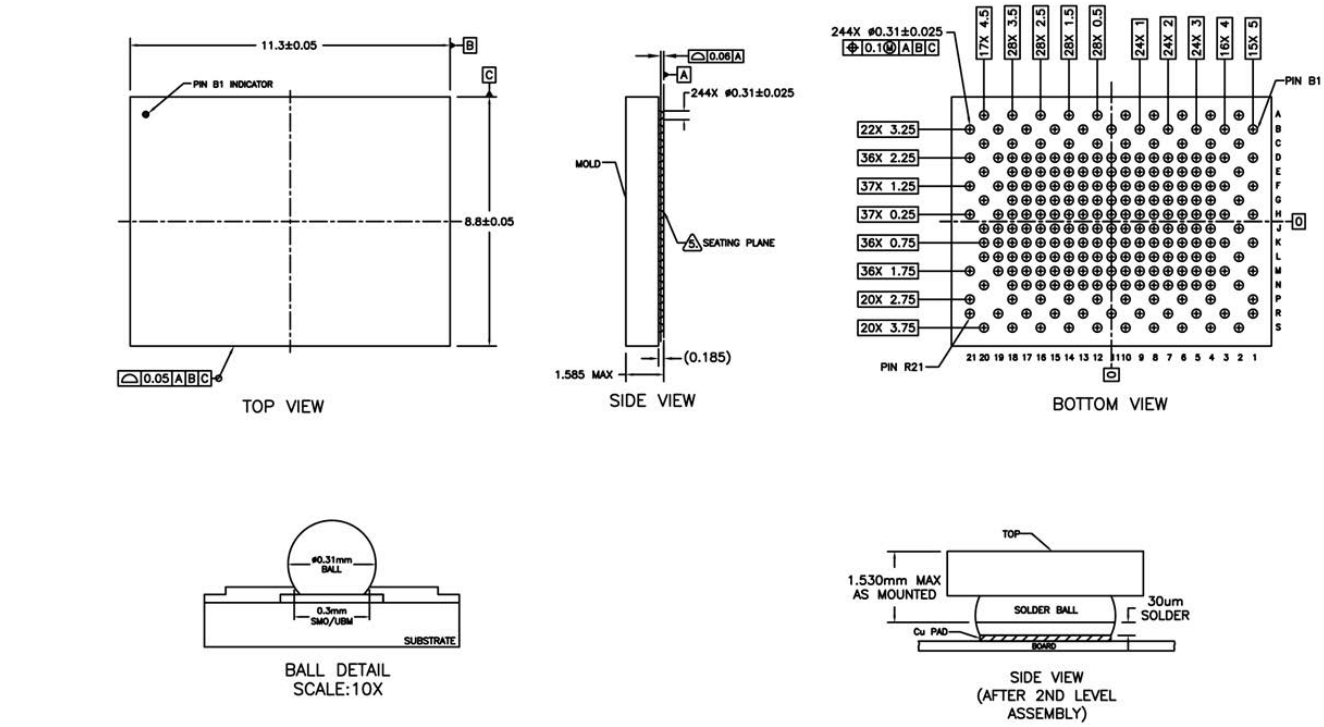

NOTES: UNLESS OTHERWISE SPECIFIED.

1. DIMENSIONING AND TOLERANCING IN ACCORDANCE WITH ASME Y14.5M–1994.
2. DIMENSIONS ARE IN MILLIMETERS
3. PRIMARY DATUM A AND SEATING PLANE ARE DEFINED BY THE SPHERICAL CROWNS OF THE SOLDER BALLS.

205930-009

Figure 12. SKY66431-11 Package Dimensions

Package and Handling Information

Since the device package is sensitive to moisture absorption, it is baked and vacuum packed before shipping. Instructions on the shipping container label regarding exposure to moisture after the container seal is broken must be followed. Otherwise, problems related to moisture absorption may occur when the part is subjected to high temperature during solder assembly.

The SKY66431-11 is rated to Moisture Sensitivity Level 3 (MSL3) at 260 °C. It can be used for lead or lead-free soldering. For additional information, refer to the Skyworks Application Note, Solder Reflow Information, document number 200164.

Care must be taken when attaching this product, whether it is done manually or in a production solder reflow environment. Production quantities of this product are shipped in a standard tape and reel format.

Figure 13. SKY66431-11 Tape and Reel Dimensions (TBD)

FCC Regulatory Approval for the SKY66431-11

FCC-ID: 2AAGM66431 (single modular approval)

This above identified LTE radio module is not intended to be provided to end-users but is for installation by OEM integrators only.

Installation/Integration

OEM integrators must follow Sequans installation instructions to provide for and benefit from FCC compliant module integrations and must abide especially by the following provisions:

The maximum antenna gain values (accounting for cable attenuation) to comply with the FCC maximum ERP/EIRP limits and with RF Exposure rules:

- LTE band 2 (1900 PCS): 9.27 dBi
- LTE band 4 (AWS-1): 6.54 dBi
- LTE band 5 (850): 10.90 dBi
- LTE band 12 (700a): 9.90 dBi
- LTE band 13 (700c): 10.90 dBi
- LTE band 17 (700b): 9.90 dBi
- LTE band 25 (1900+): 9.27 dBi
- LTE band 66 (AWS-3): 6.54 dBi

Sequans module integration guidelines must be closely followed.

Compliance of host integrations of the module is limited to hosts adaptation designs which are identical to Sequans reference design.

Host integrations with adaption designs deviating from Sequans reference design require either class 2 permissive change to this modular approval or a separate host approval with different FCC-ID;

Host integrations with co-located (simultaneously operating) radio transmitters must be evaluated in accordance with FCC multi-transmitter rules and may require either class 2 permissive change to this modular approval or a separate host approval with different FCC-ID, dependent on the result of the evaluation; Inquiry at FCC or a TCB is urgently recommended.

Integrations of the module into host products which are intended for portable use, i.e., less than 20 cm distance between its radiating structures (antenna) and the body of nearby persons, or which otherwise put additional technical requirements like Hearing Aid compatibility require either class 2 permissive change to this modular approval or a separate host approval with different FCC-ID;

Compliance with Unwanted Emission Limits for Digital Device

If the OEM host integration fully complies with the above described reference design and can completely inherit and rest on compliance of the existing modular approval the OEM remains still responsible to show compliance of the overall end-product with the FCC limits for unwanted conducted and radiated emissions from the digital device (unintentional radio) portion of such end-product (commonly addressed as part 15B compliance or similar).

End-product Labeling

- The module's FCC-ID must either be visible from the exterior of the host product (e.g. per window) or per electronic display, or shall be displayed on an additional exterior label per the following or similar string:
  `- contains FCC-ID: 2AAGM66431`
- Digital Device - Unwanted Emissions Notice: If the end-product falls under part 15 of the FCC rules (it shall display the following user notice on its exterior acc. to part 15.19 (the notice may be printed in the manual in case the host is too small):

  - This device complies with Part 15 of the FCC Rules. Operation is subject to the following two conditions: (1) This device may not cause harmful interference, and (2) This device must accept any interference received, including interference that may cause undesired operation.
- Further Labeling Requirements may apply dependent on the FCC rule parts relevant to the host product.
- End-product User Instructions / Notices in the Manual: At a minimum, end-product users must be provided with the following notices at a prominent location of the product literature furnished with the product:
  - **Product Modifications:** Modifications not expressly approved by the party responsible for compliance could void the user's authority to operate this equipment.
  - **RF Exposure Compliance:** This equipment complies with FCC radio frequency radiation exposure rules and limits set forth for an uncontrolled environment, when installed and operated with minimum distance of 20 cm between its radiating structures (antenna) and the body of nearby persons and when not operated simultaneously with other nearby radio-transmitters.
  - **Maximum Antenna Gain:** The user instructions of end-products equipped with standard external antenna connectors for the modular radio transmitter providing the option to connect other antennae than those which may or may not be bundled with the end-product must list the maximum allowed antenna gain values as derived from those given above, accounting for the cable attenuations of the actual installation.
  - **Digital Device:** Unwanted Emissions Notice: If the end-product is or contains a digital device (unintentional radio portions) and is not exempted by its use case (like vehicular use) the following part 15.105 (b) user notice shall be provided at prominent location of the product literature:
    - This equipment has been tested and found to comply with the limits for a Class B digital device, pursuant to part
    - 15 of the FCC rules. These limits are designed to provide reasonable protection against harmful interference in a residential installation. This equipment generates, uses
    - and can radiate radio frequency energy and, if not installed and used in accordance with the instructions, may cause harmful interference to radio communications. However,
    - there is no guarantee that interference will not occur in a particular installation. If this equipment does cause harmful interference to radio or television reception, which can be determined by turning the equipment off and on, the user is encouraged to try to correct the interference by one or more of the following measures:
    - Reorient or relocate the receiving antenna;
    - Increase the separation between the equipment and receiver;
    - Connect the equipment into an outlet on a circuit different from that to which the receiver is connected;
    - Consult the dealer or an experienced radio/TV technician for help
- Further User Notices: May be required dependent on the FCC rule parts relevant to the host product.
- Non-allowed User Instructions: The end-product user guidance may NOT include instructions about how to install or deinstall the module.

ISED Regulatory Approval

This device complies with ISED's licence exempt RSSs. Operation is subject to the following two conditions: (1) This device may not cause harmful interference, and (2) this device must accept any interference received, including interference that may cause undesired operation.

Le présent appareil est conforme aux CNR de l'ISED applicables aux appareils radio exempts de licence. L'exploitation est autorisée aux deux conditions suivantes : (1) le dispositif ne doit pas produire de brouillage préjudiciable, et (2) ce dispositif doit supporter tout brouillage reçu, y compris un brouillage susceptible de provoquer un fonctionnement indésirable.

This device is intended only for OEM integrators under the following conditions: (For module device use)

1. The antenna must be installed such that 20 cm is maintained between the antenna and users, and
2. The transmitter module may not be co located with any other transmitter or antenna.

As long as the two conditions above are met, further transmitter test will not be required. However, the OEM integrator is still responsible for testing their end product for any additional compliance requirements required with this module installed.

Cet appareil est conçu uniquement pour les intégrateurs OEM dans les conditions suivantes: (Pour utilisation de dispositif module)

1. L'antenne doit être installée de telle sorte qu'une distance de 20 cm est respectée entre l'antenne et les utilisateurs, et
2. Le module émetteur peut ne pas être co implanté avec un autre émetteur ou antenne.

Tant que les deux conditions ci-dessus sont remplies, des essais supplémentaires sur l'émetteur ne seront pas nécessaires. Toutefois, l'intégrateur OEM est toujours responsable des essais sur son produit final pour toutes exigences de conformité supplémentaires requis pour ce module installé.

- LTE band 2 (1900 PCS): 9.27 dBi
- LTE band 4 (AWS-1): 6.54 dBi
- LTE band 5 (850): 7.60 dBi
- LTE band 12 (700a): 6.80 dBi
- LTE band 13 (700c): 7.70 dBi
- LTE band 17 (700b): 6.80 dBi
- LTE band 25 (1900+): 9.27 dBi
- LTE band 66 (AWS-3): 6.54 dBi

IMPORTANT NOTE

In the event that these conditions cannot be met (for example certain laptop configurations or colocation with another transmitter), then the Canada authorization is no longer considered valid and the IC ID can not be used on the final product. In these circumstances, the OEM integrator will be responsible for re-evaluating the end product (including the transmitter) and obtaining a separate Canada authorization.

NOTE IMPORTANTE

Dans le cas où ces conditions ne peuvent être satisfaites (par exemple pour certaines configurations d'ordinateur portable ou de certaines co-localisation avec un autre émetteur), l'autorisation du Canada n'est plus considéré comme valide et l'ID IC ne peut pas être utilisé sur le produit final. Dans ces circonstances, l'intégrateur OEM sera chargé de réévaluer le produit final (y compris l'émetteur) et l'obtention d'une autorisation distincte au Canada.

End Product Labeling

This transmitter module is authorized only for use in device where the antenna may be installed such that 20 cm may be maintained between the antenna and users. The final end product must be labeled in a visible area with the following:

`"Contains IC:12732A-66431"`

Plaque signalétique du produit final

Ce module émetteur est autorisé uniquement pour une utilisation dans un dispositif où l'antenne peut être installée de telle sorte qu'une distance de 20 cm peut être maintenue entre l'antenne et les utilisateurs. Le produit final doit être étiqueté dans un endroit visible avec l'inscription suivante: "Contient des IC: 12732A-66431".

Manual Information to the End User

The OEM integrator has to be aware not to provide information to the end user regarding how to install or remove this RF module in the user's manual of the end product which integrates this module.

The end user manual shall include all required regulatory information/warning as show in this manual.

Manuel d'information à l'utilisateur final

L'intégrateur OEM doit être conscient de ne pas fournir des informations à l'utilisateur final quant à la façon d'installer ou de supprimer ce module RF dans le manuel de l'utilisateur du produit final qui intègre ce module.

Le manuel de l'utilisateur final doit inclure toutes les informations réglementaires requises et avertissements comme indiqué dans ce manuel.

ACMA Regulatory MarkingOrdering Information

RED Regulatory Safety Notice

CAUTION: Equipment must be supplied by ES1, PS1 circuits according to the standard EN 62368-1.

UKCA Regulatory Marking

Part Number	Part Description	Evaluation Board Part Number
SKY66431-11	5G Massive IoT System-in-Package	SKY66431-11EK1

Copyright © 2021-2022, Skyworks Solutions, Inc. All Rights Reserved.

Information in this document is provided in connection with Skyworks Solutions, Inc. ("Skyworks") products or services. These materials, including the information contained herein, are provided by Skyworks as a service to its customers and may be used for informational purposes only by the customer. Skyworks assumes no responsibility for errors or omissions in these materials or the information contained herein. Skyworks may change its documentation, products, services, specifications or product descriptions at any time, without notice. Skyworks makes no commitment to update the materials or information and shall have no responsibility whatsoever for conflicts, incompatibilities, or other difficulties arising from any future changes.

No license, whether express, implied, by estoppel or otherwise, is granted to any intellectual property rights by this document. Skyworks assumes no liability for any materials, products or information provided hereunder, including the sale, distribution, reproduction or use of Skyworks products, information or materials, except as may be provided in Skyworks' Terms and Conditions of Sale.

THE MATERIALS, PRODUCTS AND INFORMATION ARE PROVIDED "AS IS" WITHOUT WARRANTY OF ANY KIND, WHETHER EXPRESS, IMPLIED, STATUTORY, OR OTHERWISE, INCLUDING FITNESS FOR A PARTICULAR PURPOSE OR USE, MERCHANTABILITY, PERFORMANCE, QUALITY OR NON-INFRINGEMENT OF ANY INTELLECTUAL PROPERTY RIGHT; ALL SUCH WARRANTIES ARE HEREBY EXPRESSLY DISCLAIMED. SKYWORKS DOES NOT WARRANT THE ACCURACY OR COMPLETENESS OF THE INFORMATION, TEXT, GRAPHICS OR OTHER ITEMS CONTAINED WITHIN THESE MATERIALS. SKYWORKS SHALL NOT BE LIABLE FOR ANY DAMAGES, INCLUDING BUT NOT LIMITED TO ANY SPECIAL, INDIRECT, INCIDENTAL, STATUTORY, OR CONSEQUENTIAL DAMAGES, INCLUDING WITHOUT LIMITATION, LOST REVENUES OR LOST PROFITS THAT MAY RESULT FROM THE USE OF THE MATERIALS OR INFORMATION, WHETHER OR NOT THE RECIPIENT OF MATERIALS HAS BEEN ADVISED OF THE POSSIBILITY OF SUCH DAMAGE.

Skyworks products are not intended for use in medical, lifesaving or life-sustaining applications, or other equipment in which the failure of the Skyworks products could lead to personal injury, death, physical or environmental damage. Skyworks customers using or selling Skyworks products for use in such applications do so at their own risk and agree to fully indemnify Skyworks for any damages resulting from such improper use or sale.

Customers are responsible for their products and applications using Skyworks products, which may deviate from published specifications as a result of design defects, errors, or operation of products outside of published parameters or design specifications. Customers should include design and operating safeguards to minimize these and other risks. Skyworks assumes no liability for applications assistance, customer product design, or damage to any equipment resulting from the use of Skyworks products outside of Skyworks' published specifications or parameters.

Skyworks, the Skyworks symbol, Sky5®, SkyOne®, SkyBlue™, Skyworks Green™, ClockBuilder®, DSPLL®, ISOmodem®, ProSLIC®, and SiPHY® are trademarks or registered trademarks of Skyworks Solutions, Inc. or its subsidiaries in the United States and other countries. Third-party brands and names are for identification purposes only and are the property of their respective owners. Additional information, including relevant terms and conditions, posted at www.skyworksinc.com, are incorporated by reference.