Calliope Platform - Module SP150Q

Datasheet

SEQUANS Communications
15-55 Boulevard Charles de Gaulle
92700 Colombes, France
Phone. +33.1.70.72.16.00
Fax. +33.1.70.72.16.09

www.sequans.com
contact@sequans.com

SEQUANS

Preface

Legal Notices

Copyright ©2018, SEQUANS Communications

All information contained herein and disclosed by this document is confidential and the proprietary property of SEQUANS Communications, and all rights therein are expressly reserved. Acceptance of this material signifies agreement by the recipient that the information contained in this document is confidential and that it will be used solely for the purposes set forth herein. Acceptance of this material signifies agreement by the recipient that it will not be used, reproduced in whole or in part, disclosed, distributed, or conveyed to others in any manner or by any means – graphic, electronic, or mechanical, including photocopying, recording, taping, or information storage and retrieval systems – without the express written permission of SEQUANS Communications.

All Sequans' logos and trademarks are the property of SEQUANS Communications. Unauthorized usage is strictly prohibited without the express written permission of SEQUANS Communications. All other company and product names may be trademarks or registered trademarks of their respective owners. Products and services of SEQUANS Communications, and those of its licensees may be protected by one or more pending or issued U.S. or foreign patents.

Sequans' SP150Q utilizes SMSC's Inter-Chip Connectivity™ technology. See www.smsc.com.

Because of continuing developments and improvements in design, manufacturing, and deployment, material in this document is subject to change without notification and does not represent any commitment or obligation on the part of SEQUANS Communications. SEQUANS Communications shall have no liability for any error or damages resulting from the use of this document.

Document Revision History

Revision	Date	Product Application
01	July 2018	First edition.
02	September 2018	Second edition.
03	October 2018	Third edition. Refer to Changes in this Document on page iii.

About this Datasheet

Purpose and Scope

The SP150Q is a complete LTE module including base-band, RF and memory, for the design of connected consumer electronics devices, tablet and laptop computers, machine-to-machine devices, and other devices with embedded LTE connectivity on Sprint® network and its roaming partners (www.sprint.com). This document provides technical information about SP150Q LGA module. SP150Q is based on Sequans' Calliope platform.

Who Should Read this Datasheet

This document is intended for engineers who are developing User Equipment (UE) for LTE systems.

Changes in this Document

The following changes were done since the previous edition of the document:

- Updated features list in Section Product Features on page 1.
- Updated test conditions in Section 3.12 RF Performance on page 27.

References

[1] Core technology specifications:

- 3GPP E-UTRA 21 series Release 10 (EPS)
- 3GPP E-UTRA 22 series Release 10 (IMEI)
- 3GPP E-UTRA 23 series Release 10 (NAS, SMS)
- 3GPP E-UTRA 24 series Release 10 (NAS)
- 3GPP E-UTRA 31 series Release 10 (UICC)
- 3GPP E-UTRA 33 series Release 10 (security)
- 3GPP E-UTRA 36 series Release 10 (RAN)
- 3GPP2 C.S0015-A v1.0 (SMS)
- IETF, RFC 3261, 4861, 4862, 6434

For more information, see

- ftp://ftp.3gpp.org/Specs/latest/Rel-10/21_series/
- ftp://ftp.3gpp.org/Specs/latest/Rel-10/22_series/
- ftp://ftp.3gpp.org/Specs/latest/Rel-10/23_series/
- ftp://ftp.3gpp.org/Specs/latest/Rel-10/24_series/
- ftp://ftp.3gpp.org/Specs/latest/Rel-10/31_series/
- ftp://ftp.3gpp.org/Specs/latest/Rel-10/33_series/
- ftp://ftp.3gpp.org/Specs/latest/Rel-10/36_series/
- http://www.3gpp2.org/public_html/specs/CS0015-0.pdf
- https://tools.ietf.org/html/

[2] Test specifications:
3GPP E-UTRA 36 series Release 10 (RAN)
ftp://ftp.3gpp.org/Specs/latest/Rel-10/36_series/

[3] Vocabulary reference:

- 3GPP TR 21.905: "Vocabulary for 3GPP Specifications"

For more information, see http://www.3gpp.org/ftp/specs/archive/21_series/21.905/

[4]

- "Universal Serial Bus Specification", Revision 2.0, April 27, 2000 (http://www.usb.org/developers/docs/). ECM (Ethernet Networking Control Model) is specified in “USB Class Definitions for Communication Devices”, Version 1.1, January 19,1999, section 3.8.2. EEM (CDC Ethernet Emulation Model) is specified in “Universal Serial Bus Communications Class Subclass Specification for Ethernet Emulation Model Devices”, Revision 1.0, February 2, 2005.
- SQN3223 Application CPU runs OpenWrt, a Linux distribution for embedded devices. See https://openwrt.org/.

Documentation Conventions

This section illustrates the conventions that are used in this document.

General Conventions	
Note	Important information requiring the user's attention.
Caution	A condition or circumstance that may cause damage to the equipment or loss of data.
Warning	A condition or circumstance that may cause personal injury.
Italics	Italic font style denotes • emphasis of an important word; • first use of a new term; • title of a document.
Screen Name	Sans serif, bold font denotes • on-screen name of a window, dialog box or field; • keys on a keyboard; • labels printed on the equipment.

Software Conventions	
`Code`	Regular Courier font denotes code or text displayed on-screen.
`Code`	Bold Courier font denotes commands and parameters that you enter exactly as shown. Multiple parameters are grouped in brackets [ ]. If you are to choose only one among grouped parameters, the choices are separated with a pipe: [parm1 | parm2 | parm3] If there is no pipe separator, you must enter each parameter: [parm1 parm2 parm3]
`Code`	Italic Courier font denotes parameters that require you to enter a value or variable. Multiple parameters are grouped in brackets [ ]. If you are to choose only one among grouped parameters, the choices are separated with a pipe: [parm1 | parm2 | parm3] If there is no pipe separator, you must enter a value for each parameter: [parm1 parm2 parm3]

Table of Contents

Preface . . . . . **i**

Legal Notices i

Document Revision History ii

About this Datasheet . . . . . **iii**

Purpose and Scope iii

Who Should Read this Datasheet iii

Changes in this Document iii

References iv

Documentation Conventions v

Chapter 1
Product Features **1**

1.1 Features Description 1

1.2 TDM-PCM Interface Specification 5

Chapter 2
Regulatory Approval **6**

Chapter 3
Physical Characteristics **9**

3.1 ECCN and Part Number 9

3.2 Electrical Operating Conditions 10

3.2.1 Detailed Information 10

3.3 Environmental Operating Conditions 11

3.3.1 Temperature 11

3.3.2 Humidity 11

3.4 Auxiliary ADC Specification 12

3.5 Power Supply Dimensioning 12

3.6 I/O Characteristics 13

3.7 Package Description 17

3.7.1 Module Footprint 17

3.7.2 Marking Information 20

3.8 Packing Information 22

3.9 Storage Conditions 23

3.10 Mounting Considerations 24

3.11 Component Reliability 25

3.12 RF Performance 27

Chapter 4
Signals and Pins 29

4.1 SP150Q Pinout 29
4.2 Notes on SP150Q Signals 34
4.2.1 High-Speed UARTs Flow Control Signals 34
4.2.2 I2S/PCM Interface Signals 36
4.3 Power Supplies Environment 37
4.4 Power-up Sequence. 37
4.5 Low Power Mode 39

Appendix A
Acronyms 42

1 Product Features

1.1 Features Description

Sequans SP150Q module includes Calliope Category 1 baseband, a complete triple band RF front end, memory and required circuitry to meet 3GPP E-UTRA (Long Term Evolution - LTE, Release 10 set of specifications) and Sprint LTE UE specifications.

For more information on the core technology specifications see the section References on page 2. The term SP150Q module refers to the hardware and the associated embedded software.

The architecture block diagram of the SP150Q is presented on Figure 1-5.

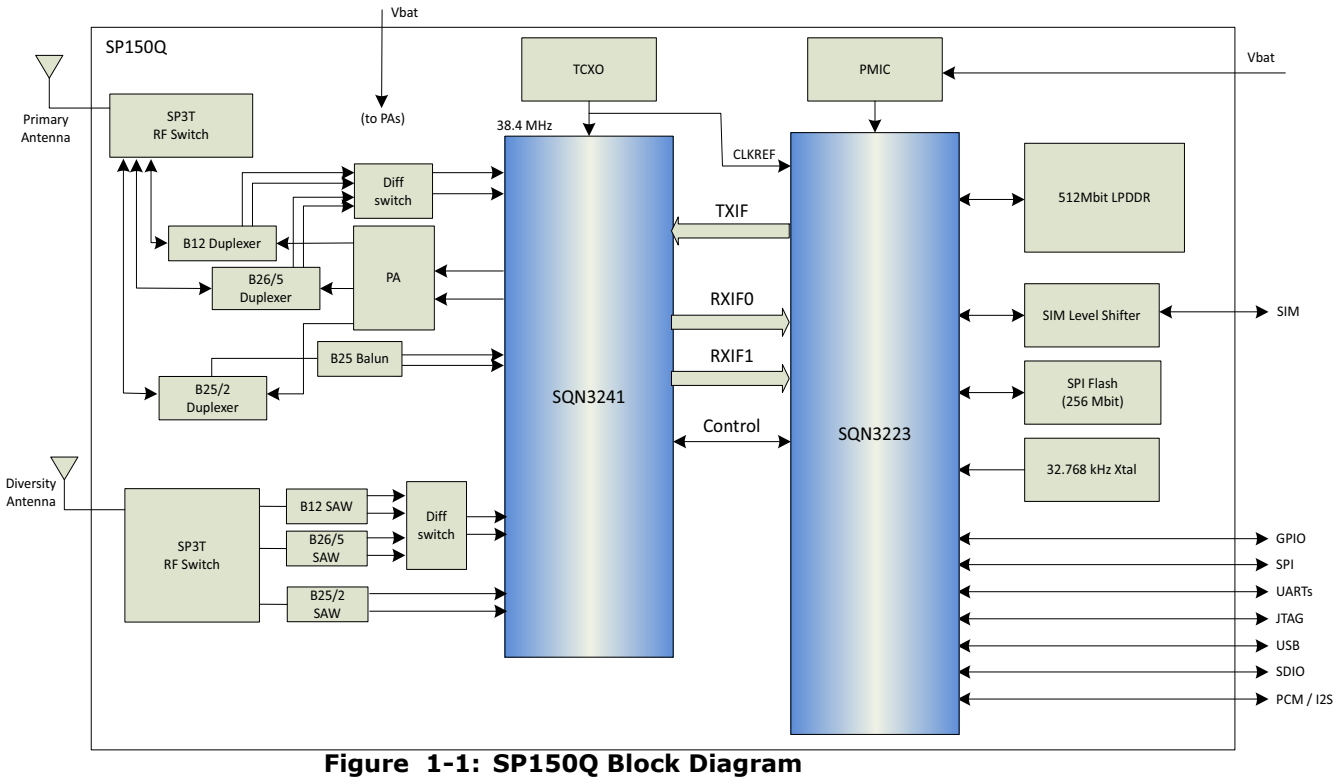

Figure 1-1: SP150Q Block Diagram

Table 1-1 on page 2 provides detail on general features of the SP150Q.

Table 1-2 on page 2 provides detail for the LTE-related features of the SP150Q.

SP150Q's ECCN and part number are detailed in the Section 3.1 ECCN and Part Number on page 9.

Table 1-1: General Features

General interfaces	• JTAG • USIM • SPI • GPIO • USB 2.0 Host or Device • UART (x3) • SDIO Host • PCM/I2S
Supported Frequency Bands	• LTE Band 25 • LTE Band 26 • LTE Band 2 • LTE Band 5 • LTE Band 12
Operation voltages	• V_{bat} (operational range from 3.3 V to 4.42 V)
Packaging	• LGA module • 108 pads (22.53 x 22.66 x 1.47 mm) • RoHS compliant, halogen-free
Operating temperature	• -30°C to +60 °C ambient See also Section 3.3 Environmental Operating Conditions on page 11
Humidity	• 10% to 85% See also Section 3.3 Environmental Operating Conditions on page 11

Table 1-2: LTE Features

Standard compliance	• 3GPP E-UTRA Release 10 compliant

Table 1-2: LTE Features (Continued)

PHY	• One UL and two DL transceivers • Category 1 UE • FDD • Normal and extended cyclic prefix • Modulation - DL: QPSK, 16QAM, 64QAM - UL: QPSK, 16QAM • All coding schemes corresponding to modulations • All channel coding (turbo-coding with interleaver, tail biting convolutional coding, block and repetition coding) and CRC lengths • Channels 5, 10, 15, and 20 MHz • Sounding (including in special subframes) • Control and data in special subframes • Antenna diversity on DL: MRC (Maximum Ratio Combining) • All power control schemes and DL power allocation schemes • HARQ Incremental Redundancy and Chase Combining, with bundling or multi-plexing • Measurements and computations related to CQI (Channel Quality Indicator), PMI (Pre-coding Matrix Indicator) and RI (Rank Indicator), RSRP, and RSRQ • Low power modes, including Power Gating
MAC	• Random Access procedure in normal and special subframes • Scheduling Request, Buffer Status Reporting, and Power Headroom Reporting • Discontinuous reception (DRX) with long and short cycles • Fast scanning • Hosted configuration • Semi-persistent scheduling • IPv4, IPv6 • RoHC • Location based services • Advanced QoS features
RLC	• ARQ modes: UM, AM, and TM
PDCP	• Ciphering and deciphering: NULL, AES, SNOW 3G • Integrity and protection: AES, SNOW 3G

Table 1-2: LTE Features (Continued)

RRC	• MIB and all SIBs • Intra and inter-frequency measurements and handover • Up to 8 Data Radio Bearers supported • MFBI (Multi-Frequency Band Indicator). FGI 35 Enabled • Frequency Hopping • Connected Mode Mobility • PUSCH Hopping • ANR (Automatic Neighbor Relation)
NAS and above	• NAS • IMS Client (SMS) or SMS over SG • OMADM Client • Pre-loaded APN • Device supports BIP messaging (all bearers) • Client Initiated BIP • LTE IP Messaging
UICC	• UICC 312530 IMSI Card Support • UICC 311882 IoT card support • Device supports removable UICC • Device supports ISIM • Device supports SIM OTA Server initiated polling requests via SMSPP • Device supports SIM OTA provisioning of user credentials into the UICC from the SIM OTA server instead of OMA DM • Device will read APN values from the UICC instead of receiving them from OMA DM

1.2 TDM-PCM Interface Specification

The features of the SP150Q's TDM-PCM controller include:

- Support of PCM slave mode with PCM_CLK input and PCM_FS input.
- Support of PCM master mode with with PCM_CLK input and PCM_FS output generated internally
- PCM_CLK input frequency from 128 kHz to 8192 kHz
- Variable number of time-slots within a frame depending on PCM_CLK frequency
- Support of PCM data format of 8-bits or 16-bits
- In master mode, SP150Q can generate other Frame Sync periods than the standard Frame Sync period (125 µs).
- Support of short and long Frame Sync formats (active for 1 or 3 PCM_CLK periods)
- Separated programmable time-slot-offset value for Tx and Rx, for each voice channel.

It supports two channels of voice over TDM-PCM. This support is provided by having two complete PCM controllers, each with its own full register set. These two controllers are time division multiplexed on the PCM bus.

Sequans PCM interface takes PCM_CLK as an input in both master and slave modes. It supports a set of different frequencies, in the range 128 kHz to 8192 kHz.

Caution: This clock signal is an input in both master and slave modes.

The signals implementing the PCM interface are detailed in 4.2.2 I2S/PCM Interface Signals on page 36.

2 Regulatory Approval

Attention

`FCC-ID: 2AAGMSP150Q` (limited modular approval)

This above identified LTE radio module is not intended to be provided to end-users but is for installation by OEM integrators only.

Installation/Integration

OEM integrators must follow Sequans installation instructions to provide for and benefit from FCC compliant module integrations and must abide especially by the following:

The maximum antenna gain values (accounting for cable attenuation) to comply with the FCC maximum ERP/EIRP limits and with RF Exposure rules will be provided in a future revision of this document for the following bands:

- LTE band 25 (1900+)
- LTE band 26 (850+)
- LTE band 2 (1900 PCS)
- LTE band 5 (850)
- LTE band 12 (700 a)

The Sequans' module integration guidelines must be closely followed.

Compliance of host integrations of the module is limited to hosts adaptation designs which are identical to Sequans' reference design.

Host integrations with adaption designs deviating from Sequans' reference design require either class 2 permissive change to this modular approval or a separate host approval with different FCC-ID;

Host integrations with co-located (simultaneously operating) radio transmitters must be evaluated in accordance with FCC multi-transmitter rules and may require either class 2 permissive change to this modular approval or a separate host approval with different FCC-ID, dependent on the result of the evaluation; Inquiry at FCC or a TCB is urgently recommended.

Integrations of the module into host products which are intended for portable use, i.e. less than 20cm distance between its radiating structures (antenna) and the body of nearby persons, or which otherwise put additional technical requirements like Hearing Aid compatibility require either class 2 permissive

change to this modular approval or a separate host approval with different FCC-ID;

Compliance with Unwanted Emission Limits for Digital Device

If the OEM host integration fully complies with the above described reference design and can completely inherit and rest on compliance of the existing modular approval the OEM remains still responsible to show compliance of the overall end-product with the FCC limits for unwanted conducted and radiated emissions from the digital device (unintentional radio) portion of such end-product (commonly addressed as part 15B compliance or similar).

End-product Labelling

- FCC-ID

  The module's FCC-ID must either be visible from the exterior of the host product (e.g. per window) or per electronic display, or shall be displayed on an additional exterior label per the following or similar string:
  `contains FCC-ID: 2AAGMSP150Q`

- Digital Device - Unwanted Emissions Notice

  If the end-product falls under part 15 of the FCC rules (it shall display the following user notice on its exterior acc. to part 15.19 (the notice may be printed in the manual in case the host is too small):

  ```
  This device complies with Part 15 of the FCC Rules.Operation is
  subject to the following two conditions:
  (1) This device may not cause harmful interference,
  and
  (2) This device must accept any interference received, including
  interference that may cause undesired operation.
  ```

- Further Labelling Requirements may apply dependent on the FCC rule parts relevant to the host product.

- End-product User Instructions / Notices in the Manual

  At a minimum, end-product users must be provided with the following notices at a prominent location of the product literature furnished with the product:

  ```
  * Product Modifications
  Modifications not expressly approved by the party responsible for
  compliance could void the user's authority to operate this
  equipment.
  * RF Exposure Compliance
  This equipment complies with FCC radio frequency radiation exposure
  rules and limits set forth for an uncontrolled environment, when
  installed and operated with minimum distance of 20cm between its
  radiating structures (antenna) and the body of nearby persons and
  when not operated simultaneously with other nearby
  radio-transmitters.
  ```

- Maximum Antenna Gain

  The user instructions of end-products equipped with standard external antenna connectors for the modular radio transmitter providing the option to connect other antennae than those which may or may not be bundled with the end-product must list the maximum allowed antenna gain values as derived from those given above, accounting for the cable attenuations of the actual installation.

- Digital Device - Unwanted Emissions Notice

  If the end-product is or contains a digital device (unintentional radio portions) and is not exempted by its use case (like vehicular use) the following part 15.105 (b) user notice shall be provided at prominent location of the product literature:

  ```
  This equipment has been tested and found to comply with the limits
  for a Class B digital device, pursuant to part 15 of the FCC rules.
  These limits are designed to provide reasonable protection against
  harmful interference in a residential installation.
  This equipment generates uses and can radiate radio frequency
  energy and, if not installed and used in accordance with the
  instructions, may cause harmful interference to radio
  communications. However, there is no guarantee that interference
  will not occur in a particular installation. If this equipment does
  cause harmful interference to radio or television reception, which
  can be determined by turning the equipment off and on, the user is
  encouraged to try to correct the interference by one or more of the
  following measures:
  o Reorient or relocate the receiving antenna.
  o Increase the separation between the equipment and receiver.
  o Connect the equipment into an outlet on a circuit different from
  that to which the receiver is connected.
  o Consult the dealer or an experienced radio/TV technician for help
  ```

- Further User Notices

  May be required dependent on the FCC rule parts relevant to the host product.

- Non-allowed User Instructions

  The end-product user guidance may NOT include instructions about how to install or de-install the module.

3 Physical Characteristics

3.1 ECCN and Part Number

The ECCN (Export Control Classification Number) of the SP150Q will be provided in a future revision of this document.

The orderable part number of the SP150Q module is:

- S150R53QRZ for Engineering samples, first revision with RF untested
- S150R53QRA for Engineering samples, second revision
- S150R53QRB for mass production modules compliant with specifications listed in Section 3.12 RF Performance on page 27

Please contact your Sequans representative to choose the part number that you should order.

3.2 Electrical Operating Conditions

3.2.1 Detailed Information

Table 3-1: Electrical Operating Conditions for SP150Q

	Direction	Minimum	Typical	Maximum
VBAT1	In	3.3 V		4.42 V
SIM_VCC (1.8 V or 3.0 V)	Out	1.62 V	1.8 V	1.98 V
		2.7 V	3.0 V	3.3 V
1V8 See note below.	Out	1.71 V	1.8 V	1.89 V
VCC1_PA	In	3.3 V	3.8 V	4.42 V
VCC2_PA	In	3.3 V	3.4 V	4.42 V

Note: The maximum current consumption allowed from the 1V8 reference pin is 50 mA.

Table 3-2: Electrical Maximum Rating for SP150Q

	Direction	Minimum	Typical	Maximum
VBAT1	In	3.135 V		5.5 V
VCC1_PA	In	3..0 V	3.8 V	5.5 V
VCC2_PA	In	0.6 V	3.4 V	5.5 V

3.3 Environmental Operating Conditions

3.3.1 Temperature

Note: The temperatures listed here are ambient.

- Operating: -30°C to +60°C
- Storage: -40°C to +85°C

3.3.2 Humidity

- Operating: 10% to 85% (non condensing)
- Storage: 5% to 85% (non condensing)

3.4 Auxiliary ADC Specification

Table 3-3: Aux ADC Specification

Performance Specification	Description	Value			Unit
		Minimum	Typical	Maximum	
AUX_ADC voltage range		0		2	V
AUX_ADC resolution	AUX_ADC ENOB including noise and distortion		10		bit
AUX_ADC tolerance	AUX_ADC tolerance **after calibration**. Please contact Sequans' technical support for details on AUX_ADC calibration.	-2		+2	%
AUX_ADC input capacitance	AUX_ADC input capacitance Note: Spec is valid in all conditions whether AUX_ADC used or not, also includes SHUT mode with 3V supply removed			2	pF
AUX_ADC input resistance	AUX_ADC input resistance Note: Spec is valid in all conditions whether AUX_ADC used or not, also includes SHUT mode with 3V supply removed	10			kOhm

3.5 Power Supply Dimensioning

Note: Information useful for power supply module dimensionning will be provided in a future revision of this document. Note also that average and detailed power consumption figures are provided in Sequans' Software Release Notes.

3.6 I/O Characteristics

The voltage and current characteristics of the various IO pads of the SP150Q versus IO bank supply voltage are illustrated in the tables below.

Caution: Note that the V_{oh} values in the tables below do not apply to GPIOs configured in open drain mode. GPIOs can be individually configured in open drain mode. When in open drain mode they either drive the line to V_{ol}, or leave it floating, to be pulled up by an external pull-up resistance. The PCB designer must ensure that the voltage on these pads never exceeds V_{ih} of the IO group to which they belong.

Table 3-4 details the various pad types as listed in SP150Q signals list.

Table 3-4: Pad Types Detail

Pad Type	Description	Maximum Input High Voltage
analog	analog (or power for powers and ground for grounds)	Not Applicable
BIDIR_DDR	1.8 V in/out. Refer to Table 3-6 for DC IO characteristics.	V_{IH} max = 1.9 V
BIDIR_PD	1.8 V in/out with software controlled internal pull-down. Refer to Table 3-5 for DC IO characteristics.	V_{IH} max = 3.6 V
BIDIR_PD_SLEW_SCHMITT	1.8 V slew-rate controlled in/out with Schmitt trigger and software controlled internal pull-down.Refer to Table 3-5 for DC IO characteristics.	V_{IH} max = 3.6 V
BIDIR_PU	1.8 V in/out with software controlled internal pull-up.Refer to Table 3-5 for DC IO characteristics.	V_{IH} max = 3.6 V
IN	1.8V input.	V_{IH} max = 3.6 V
IN_PD	1.8 V input with software controlled internal pull-down.Refer to Table 3-5 for DC IO characteristics.	V_{IH} max = 3.6 V
IN_PU	1.8V input with software controlled internal pull-up.	V_{IH} max = 3.6 V
OUT	1.8 V output.Refer to Table 3-5 for DC IO characteristics.	V_{IH} max = 3.6 V

Refer to SP150Q Pin List to know the type of IO pad used on every termination.

- The Minimum values for I_{ol} and I_{oh} should not be exceeded to guarantee that the logical level are not spoiled for each pad type.
- The Nominal values for I_{ol} and I_{oh} represent the nominal values for the pad type. They are provided for information only.

- The Maximum values for I_{ol} and I_{oh} represent the maximal values for the pad type. They are provided for information only.

Table 3-5: DC Characteristics for Digital IOs, Voltage 1.8 V

Parameter	Drive Strength	Min.	Nom.	Max.	Unit
V_{IL} Input Low Voltage		-0.3		0.63	V
V_{IH} Input High Voltage		1.17		3.6	V
V_T Threshold Point		0.79	0.87	0.94	V
V_{T+} Schmitt Trigger Low to High Threshold Point		1	1.12	1.22	V
V_{T-} Schmitt Trigger High to Low Threshold Point		0.61	0.71	0.8	V
$V_{T\ PU}$ Threshold Point with Pull-up Resistor Enabled		0.79	0.86	0.93	V
$V_{T\ PD}$ Threshold Point with Pull-down Resistor Enabled		0.8	0.87	0.95	V
$V_{T+\ PU}$ Schmitt Trigger Low to High Threshold Point with Pull-up Resistor Enabled		1	1.12	1.21	V
$V_{T-\ PU}$ Schmitt Trigger High to Low Threshold Point with Pull-up Resistor Enabled		0.61	0.7	0.8	V
$V_{T+\ PD}$ Schmitt Trigger Low to High Threshold Point with Pull-down Resistor Enabled		1.01	1.13	1.23	V
$V_{T-\ PD}$ Schmitt Trigger High to Low Threshold Point with Pull-down Resistor Enabled		0.62	0.72	0.81	V
I_I Input Leakage Current @ VI=1.8V or 0V				±10	µA
I_{OZ} Tri-state Output Leakage Current @ VO=1.8V or 0V				±10	µA
Input Capacitance			3		pF
R_{PU} Pull-up Resistor		56	89	148	kOhm

Table 3-5: DC Characteristics for Digital IOs, Voltage 1.8 V (Continued)

Parameter	Drive Strength	Min.	Nom.	Max.	Unit
R_{PD} Pull-down Resistor		52	90	167	kOhm
V_{OL} Output Low Voltage				0.45	V
V_{OH} Output High Voltage		1.35			V
I_{OL} Low Level Output Current at V_{OL}(max)	2 mA	1.2	2.2	3.6	mA
	4 mA	2.3	4.3	7.1	mA
	8 mA	4.6	8.6	14.3	mA
I_{OH} High Level Output Current at V_{OH}(max)	2 mA	1.0	2.4	4.6	mA
	4 mA	2.0	4.7	9.2	mA
	8 mA	4.0	9.4	18.4	mA

Table 3-6: DC Characteristics for Digital IOs, Voltage 1.8 V - DDR IO Pins (BIDIR_DDR Type)

Parameter	Drive Strength	Min.	Nom.	Max.	Unit
VDDQ MOBILE DDR 1.8V I/O power		1.7	1.8	1.9	V
Input Capacitance			2.689		pF
V_{IL} Input Low Voltage		-0.3		0.3 * VDDQ	V
V_{IH} Input High Voltage		0.7 * VDDQ		VDDQ + 0.3	V
$V_{ILD(AC)}$ AC Input Low Voltage		-0.3		0.2 * VDDQ	V
$V_{IHD(AC)}$ AC Input High Voltage		0.8 * VDDQ		VDDQ + 0.3	V
V_{OL} Output Low Voltage (I_{OH}=-0.1mA)				0.1 * VDDQ	V

Table 3-6: DC Characteristics for Digital IOs, Voltage 1.8 V - DDR IO Pins (BIDIR_DDR Type) (Continued)

Parameter	Drive Strength	Min.	Nom.	Max.	Unit
V_{OH} Output High Voltage (I_{OH}=-0.1mA)		0.9 * VDDQ			V
I_{OL} Low Level Output Current at V_{OL}(max)	2 mA		2.00		mA
	4 mA		4.00		mA
	8 mA		8.00		mA
	10 mA		10.00		mA
I_{OH} High Level Output Current at V_{OH}(max)	2 mA		2.00		mA
	4 mA		4.00		mA
	8 mA		8.00		mA
	10 mA		10.00		mA

Table 3-7: DC Characteristics for MODULE_PWR_EN, Voltage VDD_PWR_EN

Parameter	Drive Strength	Min.	Nom.	Max.	Unit
V_{IL} Input Low Voltage		-0.3		0.4	V
V_{IH} Input High Voltage		1.1		VBAT1 + 0.3	V

3.7 Package Description

3.7.1 Module Footprint

The dimensions marked in Figure 3-1are listed in Table 3-8.

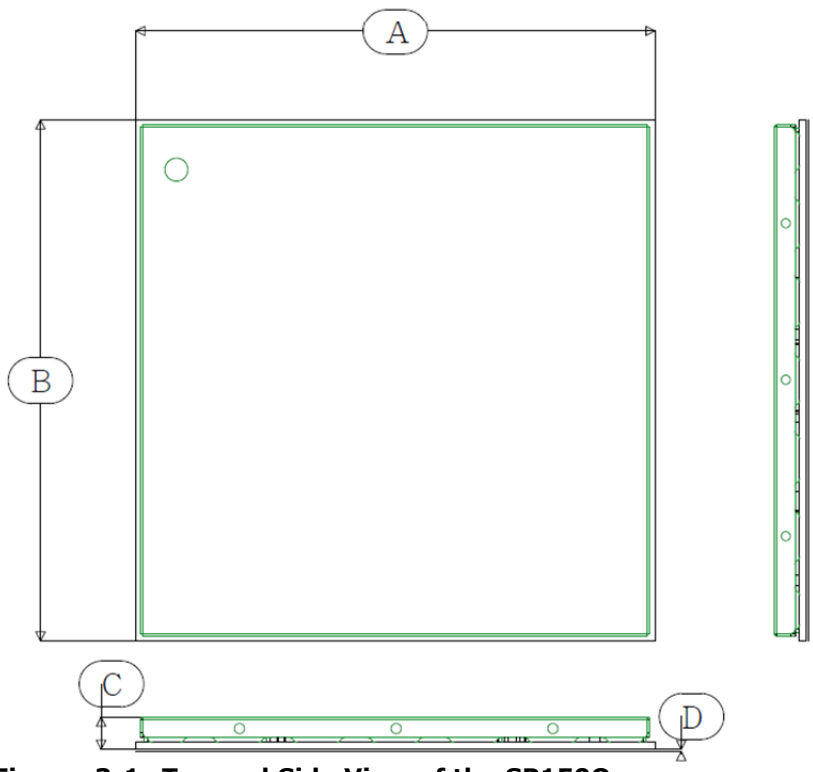

Figure 3-1: Top and Side View of the SP150Q

Table 3-8: SP150Q Outline Dimensions

Mark	Minimum (mm)	Nominal (mm)	Maximum (mm)
A	22.43	22.53	22.63
B	22.56	22.66	22.76
C	Not available	1.47	1.55
D	Not available	Not available	0.08

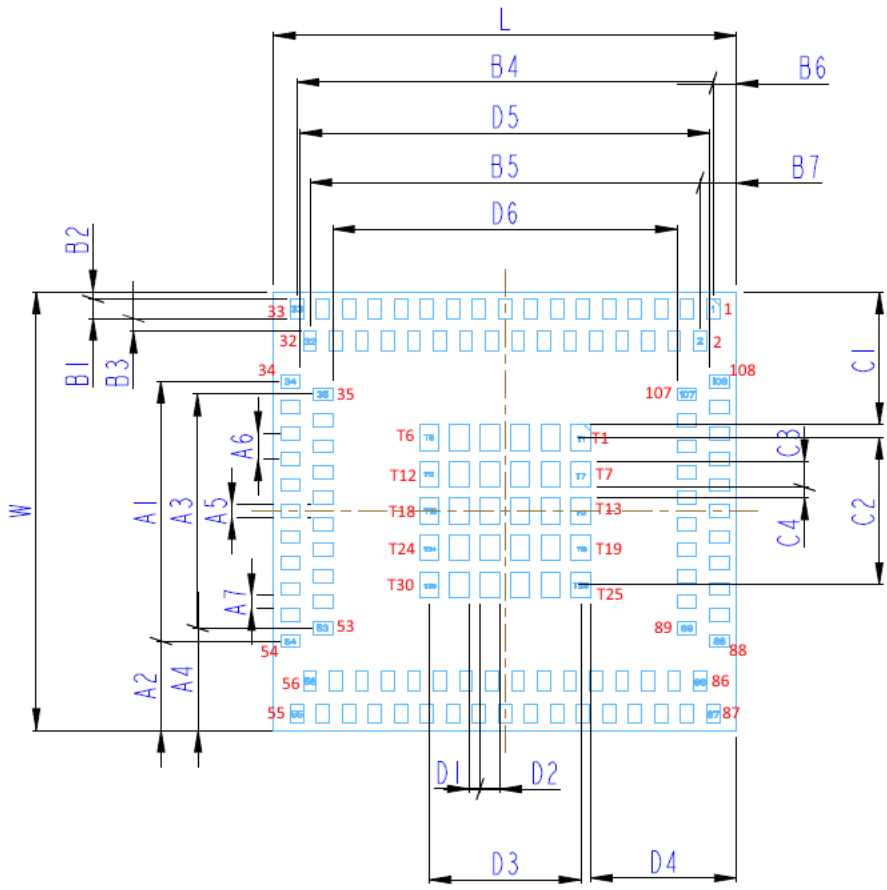

Figure 3-2: Bottom Side View of the SP150Q Pads

Attention: T1 to T30 pads are used as both GND and thermal drops.

Table 3-9: SP150Q Dimensions and Tolerances

Mark	Dimension and tolerance (mm)
L	22.53 ± 0.1
W	22.66 ± 0.1
A1	12 ± 1.0
A2	4.125 ± 0.5
A3	10.8 ± 1.0
A4	4.725 ± 0.5
A5	0.6 ± 0.05

Table 3-9: SP150Q Dimensions and Tolerances (Continued)

Mark	Dimension and tolerance (mm)
A6	1.2 ± 0.1
A7	0.6 ± 0.05
B1	0.9 ± 0.1
B2	0.325 ± 0.05
B3	0.6 ± 0.05
B4	19.2 ± 0.2
B5	18 ± 0.2
B6	1.075 ± 0.1
B7	1.675 ± 0.15
C1	6.125 ± 0.5
C2	6.8 ± 0.5
C3	1.2 ± 0.01
C4	0.5 ± 0.05
D1	0.5 ± 0.05
D2	0.9 ± 0.1
D3	7 ± 0.5
D4	6.725 ± 0.5
D5	18.9 ± 0.2
D6	15.9 ± 0.2

3.7.2 Marking Information

Note: The marking information can be either laser marking or high temperature label.

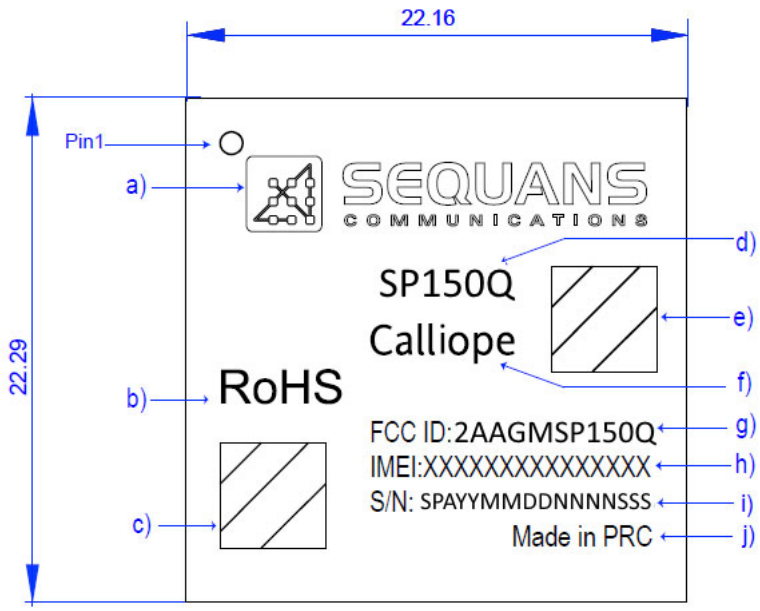

Figure 3-3: SP150Q Marking Description

Table 3-10: Marking Details

Symbol	Description
a	Sequans' logo
b	RoHS logo
c	S/N 2D barcode
d	Model: SP150Q
e	IMEI: 2D barcode
f	Calliope logo
g	FCC ID: *Will be provided in a future revision of this document.*
h	IMEI :XXXXXXXXXXXXXXX (15 digits)

Table 3-10: Marking Details (Continued)

Symbol	Description
i	S/N: SPAYYMMDDNNNNSSS (16 digits) *SPA: is immovable (3 digits)* *YYMMDD: Manufacturing Date (YY:Year, MM:Month, DD:Day)* *NNNN: panel counter (from0001~9999)* *SSS: Piece location on panel (from001~020)*
j	Made in PRC

3.8 Packing Information

The SP150Q is delivered in Tape-and-Reel. One reel can hold up to 1000 (one thousand) pieces. Each reel is included in a box, and a carton can contain three boxes. This is represented on Figure 3-4.

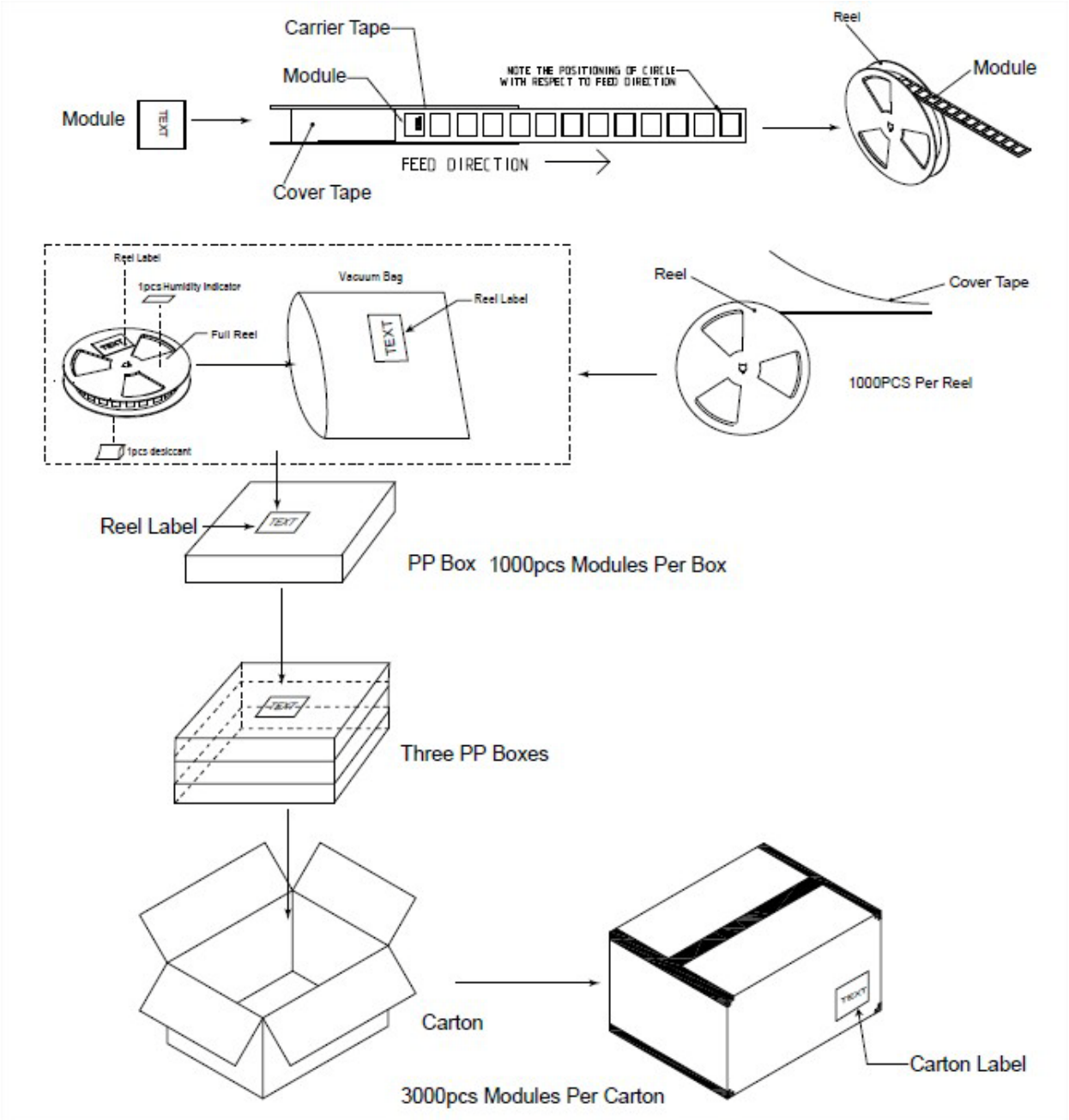

Figure 3-4: SP150Q Packing Description

3.9 Storage Conditions

1. Calculated shelf life in sealed bag : 12 months at < 40°C and < 90% RH.
2. After the moisture barrier bag (MBB) is opened, devices that will be subjected to reflow solder or other high temperature process must be:
   a) mounted within 168 hours under factory conditions = 30°C/60%RH, or
   b) Stored as per J-STD-033.
3. Devices require dry bake, before mounting, if
   a) Humidity Indicator Card reads >10% for level 2a-5a devices or >60% for level 2 devices when read at 23±5°C
   b) 2a or 2b conditions above are not met.
4. If dry bake is required, refer to IPC/JEDEC J-STD-033 for bake procedure.

Note: Level and body temperature are defined by IPC/JEDEC J-STD-020.

3.10 Mounting Considerations

This section provides reflow information.

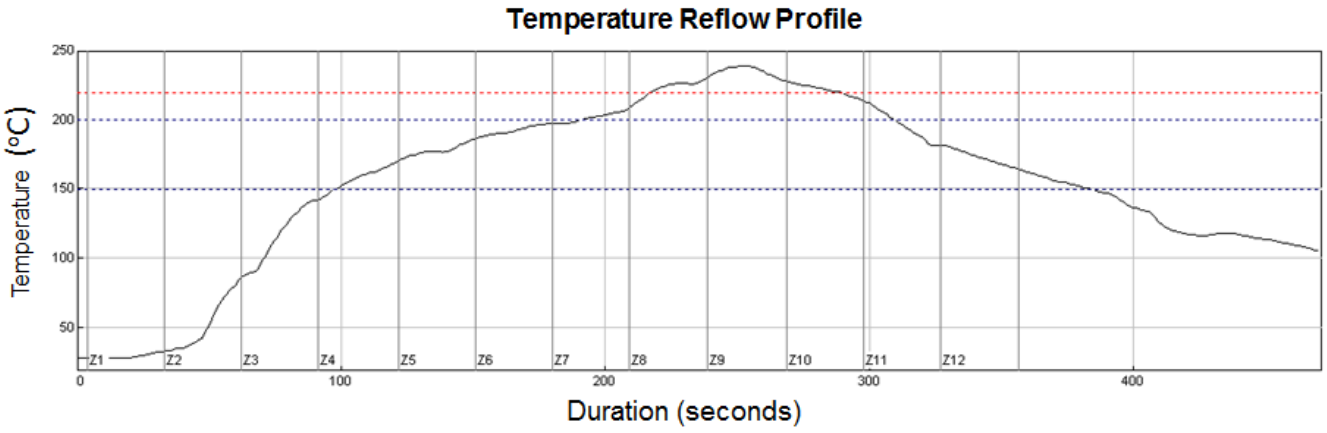

Figure 3-5: Reflow Profile

The SP150Q can support up to 3 reflows with 250°C maximum.

Table 3-11: Reflow Parameters

Parameter	Setting
Peak package body temperature	Will be provided in a future revision of the document.
Liquidous Time	
Preheat/Soak	
Ramp-up rate	
Ramp-down rate	

3.11 Component Reliability

Table 3-12: SP150Q Reliability Figures

Test Item	Test Method	Test Conditions	Test Result
ESD - Direct Discharge (ANT GND)	IEC 61000-4-2	M.2 board. See detail inTable 3-13 below.	PASS. See details inTable 3-14 and Table 3-15 below.
ESD Direct Discharge	HBM	MIL-STD-883J / Method 3015.8	±500V to ±2000V with 500V steps
	MM	ANSI/ESD S5.2-2009	±50V to ±200V with 50V steps
	CDM	JESD22-C101F	NCDM Start: ±500V, Stop: ±500V
Half-Sine Shock Test		Step1: Module 15pcs, drop height 30cm, drop direction 26 drops (all surfaces, edges and corners) Step2: M2 Card 20pcs, 500G, 1.0msec, 6drops (6 faces, 1drop/face	PASS
Vibration Test		Sweep-Sine Vibration and Random Vibration	PASS
Bump Test		Half Sine, 250m/s2, 6ms, 2bumps/s, 1000bumps per ±axis	PASS
Low Temperature Storage test		-40°C, 500 hours	PASS
High Temperature Storage test		85°C, 500 hours	PASS

Table 3-13: SP150Q ESD Test Conditions (IEC 61000-4-2 Standard)

Test Parameter	Description		
Discharge Voltage	Direct Discharge	Air	8 kV
		Contact	4 kV
	Indirect Discharge	HCP	4 kV
		VCP	4 kV
Polarity	Positive / Negative		
Discharge Impedance	330 Ohm		
Discharge Capacitance	150 pF		
Number of Discharge	Minimum 10 times at all test point for Air condition. Minimum 25 times at all test point for Contact condition. Minimum 25 times at all test point for HCP/VCP condition.		
Discharge Mode	1 time per second		

Table 3-14: Description of Criterium of ESD Test

Criterion	Description
A	The equipment shall continue to operate as intended without operator intervention. No degradation of performance or loss of function is allowed below a performance level specified by the manufacturer when the equipment is used as intended. The performance level may be replaced by a permissible loss of performance. If the minimum performance level or the permissible performance loss is not specified by the manufacturer, then either of these may be derived from the product description and documentation, and by what the user may reasonably expect from the equipment if used as intended.

Table 3-15: ESD (Indirect Discharge) Test Results

Test Level (kV)	Polarity (+/-)	Test Point	HCP Result	VCP Result
4 kV	+/-	4 sides	A	A

3.12 RF Performance

This section presents the module's performance in LTE Band 25, Band 26, Band 2, Band 5 and Band 12.

Note: The values presented in Table 3-16 and Table 3-17 are currently estimated performance results. They will be updated with measures done on parts `S150R53QRB`.

Note: UE complies with 3GPP 36.521-1 Table 6.2.2.5-1: UE Power Class test requirements, including 0.7 dB for measurement errors.

Table 3-16: Uplink

LTE Band Number	Low Freq (MHz)	High Freq (MHz)	EARFCN	Typical Output Power (dBm)
B25	1850	1915	*Will be provided in a future revision of the document*	+23.0
B26	814	849		+23.5
B2	1850	1910		+23.0
B5	824	849		+23.5
B12	699	716		+23.5

Table 3-17: Downlink

LTE Band Number	Low Freq (MHz)	High Freq (MHz)	EARFCN	Sensitivity 5 MHz (dBm)
B25	1930	1995	*Will be provided in a future revision of the document*	-101
B26	859	894		-103
B2	1930	1990		-101
B5	869	894		-103
B12	729	746		-103

The results for the typical sensitivity levels are measured under the following test conditions:

- 2 receive paths
- Tx power @ 23 dBm. UL allocation: 20RB, offset 5 for Band 12, and full allocation for Band 25/2 and Band 26/5.

4 Signals and Pins

4.1 SP150Q Pinout

Table 4-1 lists the function and main information for SP150Q pads.

The pads listed in Table 4-2 are connected to ground.

Refer also to Figure 4-1 that represents the typical implementation for UART hardware flow control.

Table 4-1: Pinout

Pad #	Pad Name	Alternate Function	Direction (HW)	Comments
2	NETWORK_LED	GPO_3, SPI_CS_N_2	Out	
3	1V8		Out	Reference voltage for IOs. Note: it can be used to provide power small devices (50 mA max usage)
4	USB_EXT_VBUS_VLD	WAKE_2	In	
5	FFF_FFH	GPIO_18	In	- Pull-up for a system boot in FFF mode. - Pull-down for a system boot in FFH mode.
6	ACTIVITY_LED	GPO_2	Out	
7	MODULE_ON_IND	GPIO_19	Out	Module “ON” Indicator.
8	HWID1	GPIO_27	In	This signal shall be pull-up.
9	DNC/HSIC_DATA		In/Out	Reserved, do not connect.
10	HWID2	GPIO_28	In	This signal shall be pull-up.
11	DNC/HSIC_STROBE		Out	Reserved, do not connect.
12	SIM_RSTN		Out	
13	USB_D+		In/Out	

Table 4-1: Pinout (Continued)

Pad #	Pad Name	Alternate Function	Direction (HW)	Comments
14	SIM_CLK		Out	
15	USB_D-		In/Out	
16	SIM_DETECT		In	SIM_DETECT = 1 signals that a card is present. SIM_DETECT = 0 signals that no card is present.
17	SIM_IO		In/Out	
18	SIM_VCC		Out	
19	SDIO_HOST_D2	GPO_6	In / Out	
21	SDIO_HOST_CLK	GPO_9	Out	
23	SDIO_HOST_CMD	GPO_8	In/Out	
25	SDIO_HOST_D1	GPO_5, WAKE_3	In / Out	
27	SDIO_HOST_D0	GPO_4	In / Out	
29	SDIO_HOST_D3	GPO_7	In / Out	
35	PCM_RXD	GPIO_10	In	PCM receive data. See details in Section 4.2.2 I2S/PCM Interface Signals on page 36.
36	PCM_CLK	GPO_1	In	PCM clock input, from 128 kHz to 8192 kHz. See details in Section 4.2.2 I2S/PCM Interface Signals on page 36.
37	PCM_FS	GPIO_9	In/Out	Frame synchronization at 8 kHz. See details in Section 4.2.2 I2S/PCM Interface Signals on page 36.
38	PCM_TXD	GPIO_8	Out	PCM transmit data. See details in Section 4.2.2 I2S/PCM Interface Signals on page 36.
39	RFDATA_12		Out	
40	RFDATA_18		Out	
41	RFDATA_19		Out	
44	ANT1		In	Auxiliary antenna
47	RESET_N		In	
48	JTAG_TDO		Out	

Table 4-1: Pinout (Continued)

Pad #	Pad Name	Alternate Function	Direction (HW)	Comments
49	JTAG_TRSTN		In	
50	JTAG_TMS		In	
51	JTAG_TDI		In	
52	JTAG_TCK		In	
54	ANT0		In / Out	Main antenna
56	UART0_SOUT	GPIO_35	Out	
57	AUX_ADC		In	
58	UART0_SIN	GPIO_34	In	
59	SPI_SDI	GPIO_44	Out	Data from SP150Q module to SPI device.
60	SPI_CS_N_1	GPIO_47	Out	
61	SPI_CLK	GPIO_43	Out	
67	SPI_SDO	GPIO_45	In	Data from SPI device to SP150Q module.
75	UART2_CTS	GPIO_6	In	UART2 flow control, Clear-To-Send, active low, of the SP150Q. See details in Section 4.2.1 High-Speed UARTs Flow Control Signals on page 34.
76	UART2_RTS	GPIO_7	Out	UART2 flow control, Ready-To-Send, active low, of the SP150Q. See details in Section 4.2.1 High-Speed UARTs Flow Control Signals on page 34.
77	UART2_SIN	GPIO_4	In	
78	UART3_SIN	GPIO_14	In	
79	UART2_SOUT	GPIO_5	Out	
80	UART3_SOUT	GPIO_15	Out	
81	UART3_RTS	GPIO_17	Out	UART3 flow control, Ready-To-Send, active low, of the SP150Q. See details in Section 4.2.1 High-Speed UARTs Flow Control Signals on page 34.
82	SQN3223_GPIO_38		In / Out	

Table 4-1: Pinout (Continued)

Pad #	Pad Name	Alternate Function	Direction (HW)	Comments
83	UART3_CTS	GPIO_16	In	UART3 flow control, Clear-To-Send, active low, of the SP150Q. See details in Section 4.2.1 High-Speed UARTs Flow Control Signals on page 34.
84	SQN3223_GPIO_41		In / Out	
85	SQN3223_GPIO_39		In / Out	
88	SQN3223_GPIO_24		In / Out	
89	SQN3223_GPIO_25		In / Out	
90	SQN3223_GPIO_40		In / Out	
91	SQN3223_GPIO_26		In / Out	
92	SQN3223_GPIO_20		In / Out	
93	SQN3223_GPIO_23		In / Out	
94	SQN3223_GPIO_22		In / Out	
95	SQN3223_GPIO_21		In / Out	
96	WAKE_1	GPIO_3	In	
97	VCC1_PA		In	
98	VCC2_PA		In	
99	VCC2_PA		In	
100	DNC			Do Not Connect, reserved
101	DNC			Do Not Connect, reserved
102	DNC			Do Not Connect, reserved
103	DNC			Do Not Connect, reserved
104	WAKE_0		In	See details in Section 4.5 Low Power Mode on page 39.
105	SAR_DETECT	GPIO_42	In / Out	
106	MODULE_PWR_EN		In	See IO Characteristics for VDD_PWR_EN
107	VBAT1		In	

Table 4-1: Pinout (Continued)

Pad #	Pad Name	Alternate Function	Direction (HW)	Comments
108	VBAT1		In	

Table 4-2: Ground Pads

Pad #	Pad Name	Comment
1 20 22 24 26 28 30 31 32 33 34 42 43 45 46 53 55 62 63 64 65 66 68 69 70 71 72 73 74 86 87	GND	All GND pads shall be connected to the same copper.
T1 T2 T3 T4 T5 T6 T7 T8 T9 T10 T11 T12 T13 T14 T15 T16 T17 T18 T19 T20 T21 T22 T23 T24 T25 T26 T27 T28 T29 T30	GND	All GND pads shall be connected to the same copper.

4.2 Notes on SP150Q Signals

4.2.1 High-Speed UARTs Flow Control Signals

- UART2_CTS: UART2 flow control, Clear-To-Send, active low, of the SP150Q. To be connected to the RTS of the remote UART device. Provision a 1 kOhm pull-down on CTS pin when flowcontrol is not used. If it is connected to an external component (like a RS232 driver), the user should make sure that this component will present a low level to the SP150Q. See Figure 4-1.
- UART2_RTS: UART2 flow control, Ready-To-Send, active low, of the SP150Q. To be connected to the CTS of the remote UART device. See Figure 4-1.
- UART3_CTS: UART3 flow control, Clear-To-Send, active low, of the SP150Q. To be connected to the RTS of the remote UART device. Provision a 1 kOhm pull-down on CTS pin when flowcontrol is not used. If it is connected to an external component (like a RS232 driver), the user should make sure that this component will present a low level to the SP150Q. Figure 4-1.
- UART3_RTS: UART3 flow control, Ready-To-Send, active low, of the SP150Q. To be connected to the CTS of the remote UART device. See Figure 4-1.

Figure 4-1 represents the typical implementation for the hardware flowcontrol.

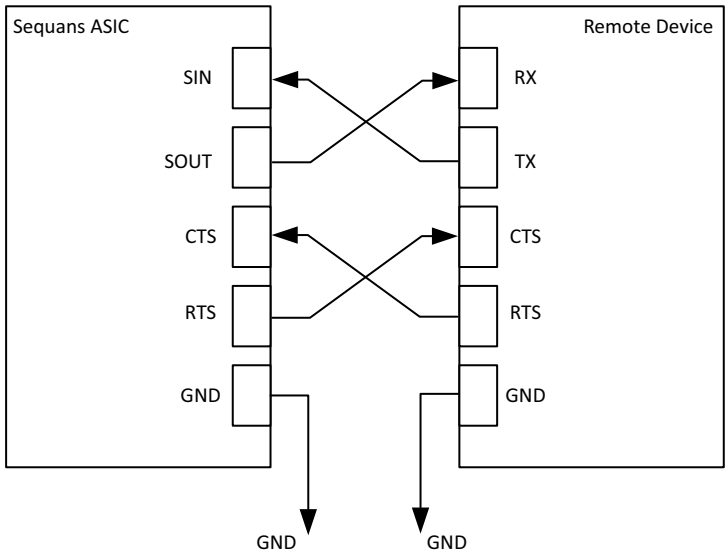

Figure 4-1: UART Flow Control

Note: High-Speed UART can be used as low-speed UART, given a specific software registers configuration and the setting of the CTS signal to 0. Please contact Sequans customer support for details.

4.2.2 I2S/PCM Interface Signals

- PCM_RXD: PCM receive data. PCM data block is 8-bits or 16-bits. Only one data block is received per frame. Receive time-slot offset is programmable by using the RX_SLOT register. For instance, if RX_SLOT=5, then the 8-bit data block is received from time-slot #5 to #12. Bit-order is configurable.
- PCM_CLK: PCM clock input, from 128 kHz to 8192 kHz

  Sequans PCM interface takes PCM_CLK as an input in both master and slave modes.

  Caution: This clock signal is an input in both master and slave modes.

  When choosing a clock source for PCM_CLK, it is important to ensure that the selected frequency is supported by the IC connected to SP150Q's PCM interface.

  The choice of frequency depends on:

  – Sampling frequency Fs
  – Number of bits per sample Nbps
  – Number of slots per PCM frame

  It is given by the following formula:

  ```
  PCM_CLK = Fs * Nbps * slots-per-PCM-frame
  ```

  Where SP150Q supports:

  – All commonly used sampling frequencies (8 kHz, 16 kHz, 32 kHz, 44.1 kHz, 48 kHz, 96 kHz, 192 kHz, 22.05 kHz, 44.1 kHz, 88.2 kHz, 176.4 kHz)
  – 8 or 16 bits per sample (Nbps)
  – 1 to (1024/Nbps) slots per PCM frame

- PCM_FS: Frame synchronization at 8 kHz. The number of time-slots within a frame varies, depending on PCM_CLK frequency. To be flexible in offset configuration, we define one PCM clock period per time-slot. Therefore, in 8-bit format, 8 time-slots are used to receive or transmit one 8-bit data block. If PCM_CLK=128 kHz, there are 16 time-slots per frame. If PCM_CLK=8192 kHz, there are 1024 time-slots per frame. In master mode, PCM_FS is an output generated internally. In slave mode, PCM_FS is an input. Both short and long Frame Sync standards are supported. Short Frame Sync is high for one and only one PCM clock period. Long Frame Sync is high for three consecutive PCM clock periods. In both cases, the positive edge of PCM_FS occurs every 125 µs.
- PCM_TXD: PCM transmit data. PCM data block is 8-bits or 16-bits. Only one data block is transmitted per frame. Transmit time-slot offset is programmable by using the TX_SLOT register. For instance, if TX_SLOT=8, then the 8-bit data block is transmitted from time-slot #8 to #15. Bit-order is configurable. PCM_TXD is in low-impedance during data transmission, otherwise it is in high impedance.

4.3 Power Supplies Environment

Figure 4-3 illustrates the connections between the power supplies of the SP150Q.

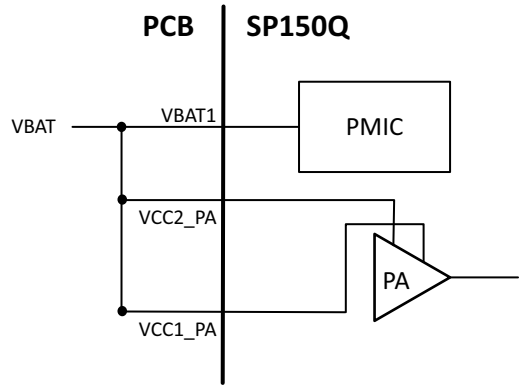

Figure 4-2: SP150Q Power Supplies Diagram

4.4 Power-up Sequence

Note: After each module boot, the modem will issue +SYSSTART URC.

The following timing requirement applies to the signals VBAT1, MODULE_PWR_EN and RESET_N. It must be respected for proper SP150Q's behavior.

Caution: `VBAT1` and `VBAT2` should remain stable in the voltage range listed in Table 3-2; if this condition is not met, the internal OTP (One-Time Programmable) area of the baseband chip might be randomly corrupted and it can lead to a non-functional and unrecoverable state preventing the module to correctly boot.

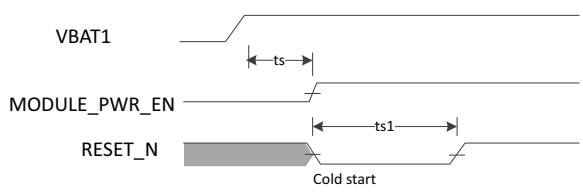

Figure 4-3: VBAT1, MODULE_PWR_EN and RESET_N Signals Timing Requirement for Cold Start

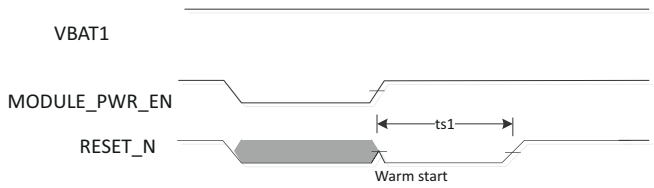

Figure 4-4: VBAT1, MODULE_PWR_EN and RESET_N Signals Timing Requirement for Warm Start

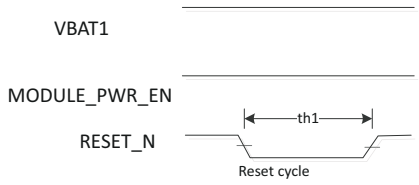

Figure 4-5: VBAT1, MODULE_PWR_EN and RESET_N Signals Timing Requirement for Reset Cycle

The timing minimum values are listed in Table 4-3.

Table 4-3: VBAT1, MODULE_PWR_EN and RESET_N Signal Timing Values

Symbol	Description	Minimum Duration	Maximum Duration
ts	VBAT1 setup time	0 ms	-
ts1	RESET_N setup time	1 ms	-
th1	RESET_N hold time	1 µs	-

4.5 Low Power Mode

The SP150Q integrates several mechanisms to support power consumption optimization during operation and during low-power mode.

SP150Q can be woken from low power mode through:

- USB resume signaling (when the host supports it)
- USB plug / unplug event (reported by the signal USB_EXT_VBUSVLD)
- SDIO interrupt on SDIO_HOST_D1
- Two dedicated input signal WAKE_0 and WAKE_1

Note: Wake from activity on the UARTx interfaces is not possible directly. It can be achieved by connecting a SP150Q's GPIO driven by the external device before resuming UARTx activity.

In a use case where a device on the far end of a UART link needs to wake SP150Q, that device must provide a signal to one of SP150Q's WAKE_x signals.

If the end device has an output that says it is ready to transmit a character over the UART, then that signal can be connected to one of the SP150Q's WAKE_x signals. If not, then that device should use a GPIO or other signal to stimulate SP150Q's WAKE_x signal.

WAKE_x signals are active only when the SP150Q is asleep.

To get the lowest possible power consumption during low-power mode, all IOs must be stable. At software configuration time, take care of the following, to prevent them from being in conflict or floating:

- Pads that are not driven by an external device shall be driven low by software if they have a GPIO or GPO or RFDATA mode that allows it.
- For pads that are known to be driven by an external device:

  Configure that external device to hold the signal stable during low-power mode, and configure SP150Q to treat that pin as an input, without internal pull-up or pull-down.
- For pads where, at the time of low-power mode, the signal may or may not be driven by an external device:

  Configure SP150Q to enable the internal pull-up/pull-down on the pad to guarantee that it will not be floating during low-power mode.

The signals involved in the low-power mode of the SP150Q are listed in Table 4-4.

Note: Each signal's pull (up or down) is determined by register. It can be modified by software.

Table 4-4: Signals Related to Low-Power Mode

Signal Name	Drive	Description
SDIO_HOST_D1	Open-drain	Possible wakeup by SDIO Host activity. See important note below.
USB_EXT_VBUSVLD	Open-drain	Possible wakeup by USB activity. USB_EXT_VBUSVLD is driven low and indicates USB cable presence if value is 1 (based on VBUS). See important note below.
WAKE_0	Input with pull-down [1]	Default setting is to wake on high to low transition. Available for user application. The software can configure SP150Q to wake from low power mode when this signal is high, or when this signal is low. Alternatively, software can configure SP150Q to ignore this signal when it is in low power mode. See important notes below.
WAKE_1	Input	Default setting is to wake on high to low transition. Available for user application. The software can configure SP150Q to wake from low power mode when this signal is high, or when this signal is low. Alternatively, software can configure SP150Q to ignore this signal when it is in low power mode. See important note below.

1. Internal pull-down resistor has 30 kOhm to 72 kOhm value.

Important Notes

1. **SDIO_HOST_D1**

   This signal is muxed with WAKE_3, which is transition configurable. To trigger an interrupt, the designer must map WAKE_3 signal to a dedicated GPIO. The pulse on GPIO must be long enough (typically 8 ms) to be detected in any mode.

   This feature might not be activated in the software release preloaded in the module. Please contact Sequans technical support if you intend to use it.

2. **USB_EXT_VBUSVLD**

   This signal is muxed with WAKE_2, which is transition configurable. To trigger an interrupt, the designer must map WAKE_2 signal to a dedicated GPIO. The pulse on GPIO must be long enough (typically 8 ms) to be detected in any mode.

   This feature might not be activated in the software release preloaded in the module. Please contact Sequans technical support if you intend to use it.

3. **WAKE_0**

   a) As default software configuration, WAKE_0 detects a low level to wake-up the baseband; this behavior can be changed by software. To trigger an interrupt, the designer must map WAKE_0 signal to a dedicated GPIO. The pulse on GPIO must be long enough (typically 8 ms) to be detected in any mode. Please refer to Module Integration Guide or Sequans Technical Support for more detail.
   b) Extra current leakage occurs when WAKE_0 is high and the module in low power mode. It is then recommended to introduce a tiny logic inverter gate in front of WAKE_0 when WAKE_0 is high in low-power mode; you can also consider to use WAKE_1 if possible. The extra current leakage does not occur when WAKE_0 is low when the module is in low power mode (wake on level high).

4. **WAKE_1**

   As default software configuration, WAKE_1 detects a low level to wake-up the baseband; this behavior can be changed by software.

   This feature might not be activated in the software release preloaded in the module. Please contact Sequans technical support if you intend to use it.

A Acronyms

Acronym	Definition
ADC	Analog to Digital Converter
CPU	Central Processing Unit
DL	Downlink
ECCN	Export Control Classification Number
ECM	Ethernet Control Model, USB interface
EEM	Ethernet Emulation Model, USB interface
ENOB	Effective number of bits
ESD	Electro-static discharge
ETSI	European Telecommunications Standard Institute
FFF	Firmware from Flash. Specific load and boot mode for the module.
FFH	Firmware from Host. Specific load and boot mode for the module.
GND	Ground
GNSS	Global Navigation Satellite System
GPIO	General Purpose Input Output
HBM	Human Body Model (ESD)
HCP	Horizontal Coupling Plane
I/O	Input/Output
I2C	Inter-Integrated Circuit interface
IMEI	International Mobile Equipment Identity

Acronym	Definition
IMS	Instant Messaging Service
IP	Internet Protocol
JTAG	Joint Test Action Group
LGA	Large Grid Array
LTE	Long Term Evolution, or 4G. Standard is developed by the 3GPP www.3gpp.org.
MIMO	Multiple In Multiple Out
MM	Machine Model (ESD)
NAS	Network Access Server
OMADM	Open Mobile Alliance Device Management
PCM	Pulse-Code Modulation
PHY	Physical Layer
QTY	Quantity
RB	Resource Block
RF	Radio Frequency
RoHS	Restriction of Hazardous Substances
Rx	Reception
S/N	or SN: Serial Number
SDM	Socketed Device Model (ESD)
SIM	Subscriber Identification Module
SMS	Short Message Service
SPI	Serial Peripheral Interface
SPI	Serial Peripheral Interface
Tx	Transmission
UART	Universal Asynchronous Receiver Transmitter
UE	User Equipment

Acronym	Definition
UL	Uplink
USB	Universal Serial Bus
VCP	Vertical Coupling Plane