CRAZON®

ZC 333 ZHENCHENG®

INSTRUCTION SHEET

Thanks for purchasing our products. Please read the instruction sheet carefully before using.

*The product may vary from the picture.

Rotation Battle Robot

PRODUCT CONFIGURATION

Transmitter x2 Shield（Blue） Robot（Blue） Robot（Red）

(B) FOR RECHARGEABLE VERSION

2x4.8V
battery pack

4x1.5V
AA battery

2xUSB
charging line

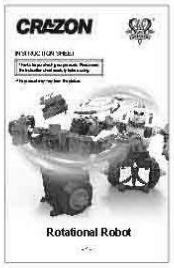

Instruction sheet

(1)2X 4.8V 700mAh battery pack for Robot (included)
(2)4X1.5V AA battery for transmitter (not included)
(3)Include 2XUSB charging line and 1 instruction sheet

(A) FOR NON-RECHARGEABLE VERSION

8X1.5V AA battery
(4X1.5V AA battery for each robot)

4X1.5V AA battery
(2X1.5V AA battery for each transmitter)

(1)4X1.5V AA battery for each robot (not included)
(2)2X1.5V AA battery for each transmitter (not included)

TRANSMITTER

TRANSMITTER FUNCTIONS EXPLANATORY CHART

Key of Function description

1. Make the defiant voice combination key: (C1+A1+B2/C2+A2+B1).
2. Press B1+B2: go straight forward.
3. Press C1+C2: go straight backward.
4. A1 :upper body clockwise rotation.
   A2: upper body counterclockwise rotation.
5. B2: The right side wheel go forward, the robot counterclockwise rotation.
   C2: The right side wheel go backward, the robot clockwise rotation.
6. B1: The left side wheel go forward, the robot clockwise rotation.
   C1: The left side wheel go backward, the robot counterclockwise rotation.
7. D1: rotation Speed up.
8. Press B1+C2: clockwise rotation .
9. Press B2+C1: counterclockwise rotation.

TRANSMITTER BATTERY INSTALLATION EXPLANATORY CHART

(1) 2*1.5V AA battery for transmitter (not included).
(2) Remove the screw on the battery box by screw driver.
(3) Put 2X1.5V AA battery into the battery box.
(Notice: Batteries must be inserted with the correct polarity)
(4) Put on the battery cover, lock with a screw.

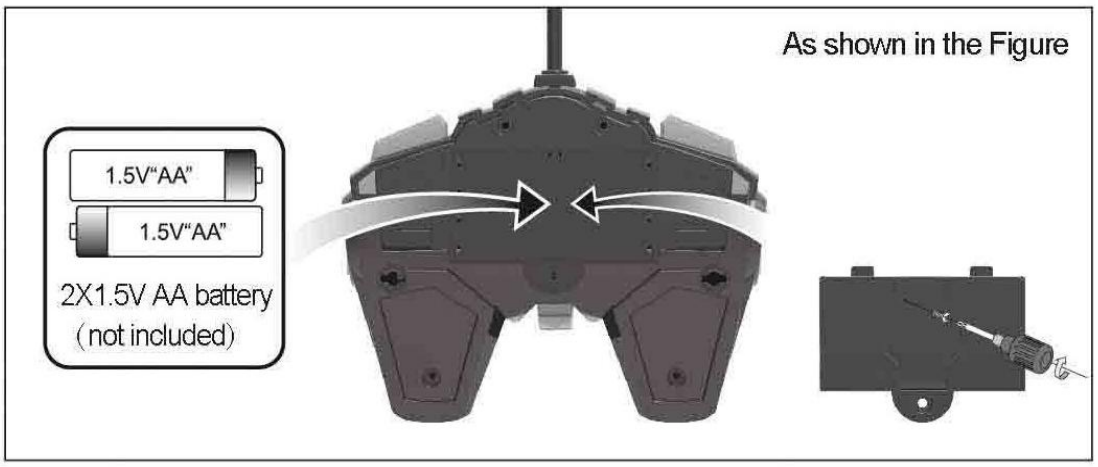

NOTES OF BATTERY USAGE :

(1) 1X4.8V rechargeable battery for each robot,2X1.5V AA battery for each transmitter.
(2) The rechargeable battery can only be charged under adult supervision.
(3) The rechargeable battery should be removed from the toy before charging.
(4) The non-rechargeable battery is not rechargeable.
(5) Please use only the same battery or battery as recommended.
(6) Don't mix different types of batteries or used and new batteries.
(7) The battery should be put in the correct polarity.
(8) Please remove the exhausted battery from the toy.
(9) The power supply terminals shall not be short circuited.
(10) The charger must be checked the wire, plug, shell and other components every month to see if it is damaged, and must be stopped once found the damaged until the repair is complete.

THE ROBOT

BATTERY INSTALLATION EXPLANATORY CHART (RECHARGEABLE VERSION)

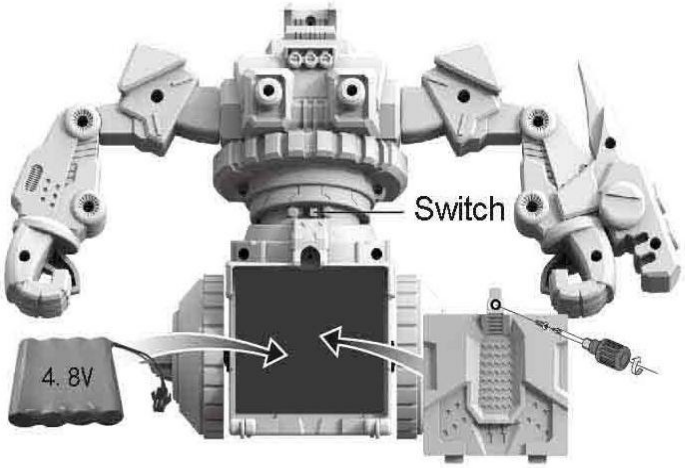

(1) 1X4.8V 700mAh rechargeable battery pack for each robot.(Included).
(2) Remove the screw on the battery box by screw driver.
(3) Put 1*4.8V rechargeable battery pack into the battery box.
(Notice: Batteries must be inserted with the correct polarity)
(4) Put on the battery cover, lock with a screw.

Charging demo chart of 4.8V rechargeable battery pack

USB CHARGING LINE IS SUITABLE FOR THE FOLLOWING WAYS:

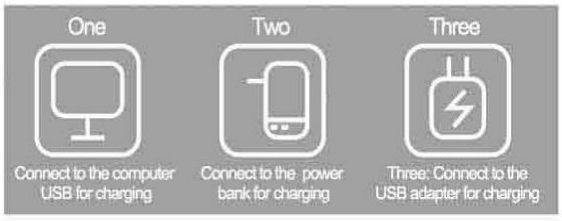

1.Rechargeable battery can only be charged under adult supervision.Only use the same battery or battery as recommended.
2.The USB line must be checked every month including its wire, plug, shell and other parts to see if they are damaged. Stop using it once there is any damage until it was restored .

BATTERY INSTALLATION EXPLANATORY CHART (NON-RECHARGEABLE VERSION)

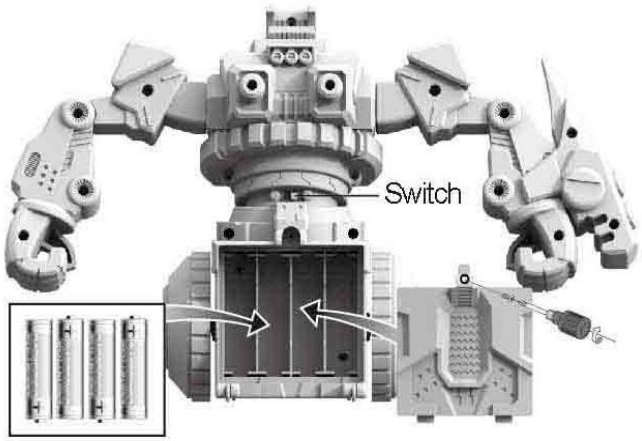

⚠ Warning

- Notice: Batteries must be inserted with the correct polarity.
- Do not mix different types of batteries or used and new batteries.

(1) 4*1.5V AA battery for robot.(not included)
(2) Remove the screw on the battery box by screw driver.
(3) Put 4*1.5V AA battery into the battery box. (Notice: Batteries must be inserted with the correct polarity)
(4) Put on the battery cover, lock with a screw.

(1) When the transmitter is turned on, the red light is on.

(2) Turn on the robot and transmitter, it will takes 5-6 seconds for binding.

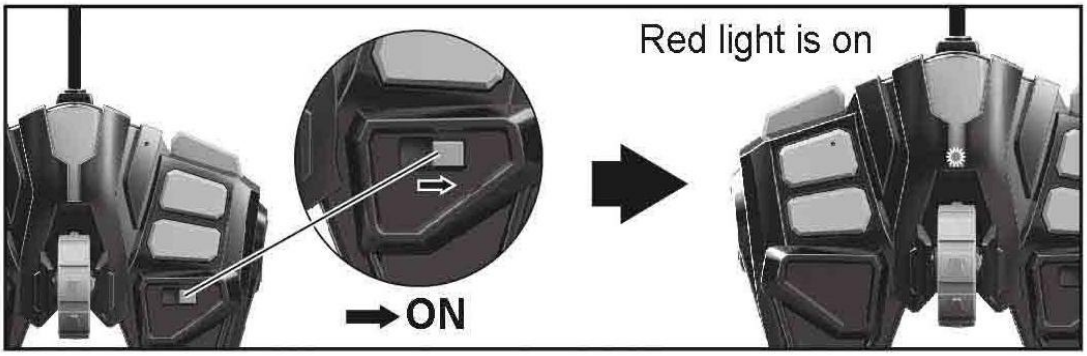

When the product bind successfully, the robot's eyes will blink and rotate left and right.

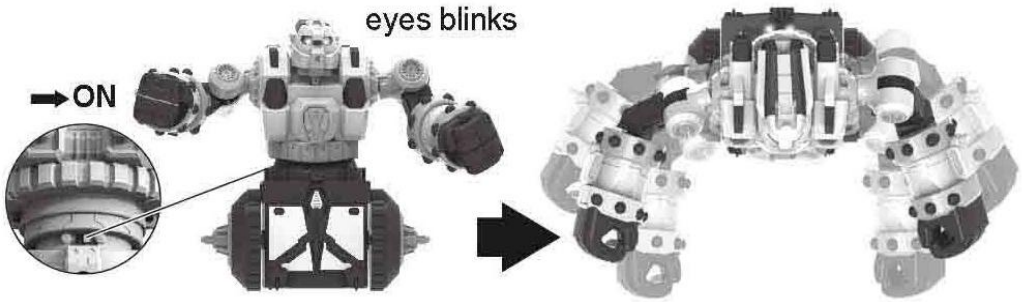

OPERATING PROCEDURES

TRANSMITTER OPERATION

(1) As shown in picture 1, press the button B1 on the transmitter, the left wheel goes forward and the robot clockwise rotation.

(2) As shown in picture 2,press the button B2 on the transmitter, the right wheel goes forward and the robot counterclockwise rotation.

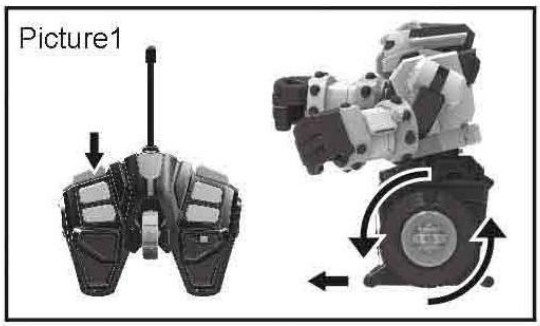

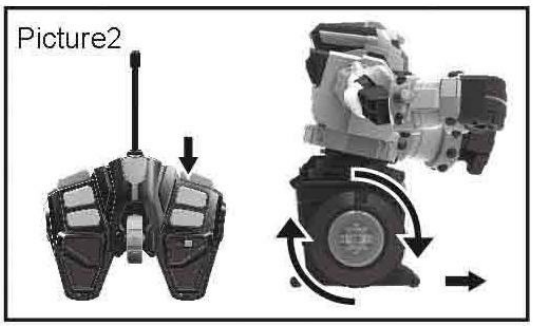

(3) As shown in picture 3, press the button C1 on the transmitter, the left wheel goes backward and the robot counterclockwise rotation .

(4) As shown in picture 4, press the button C2 on the transmitter, the right wheel goes backward and the robot clockwise rotation.

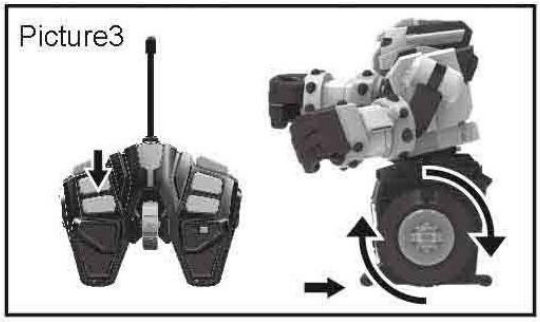

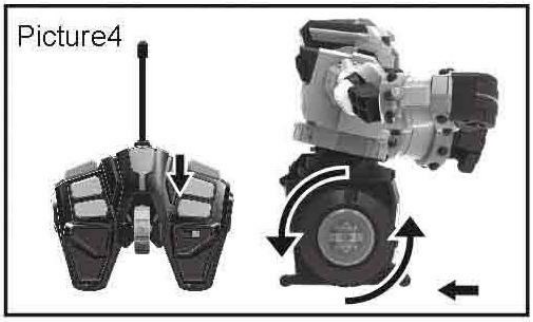

(5)As shown in picture 5, press the button A1, the upper body of the robot rotates clockwise.

(6) As shown in picture 6, press the button A2, the upper body of the robot rotates counterclockwise.

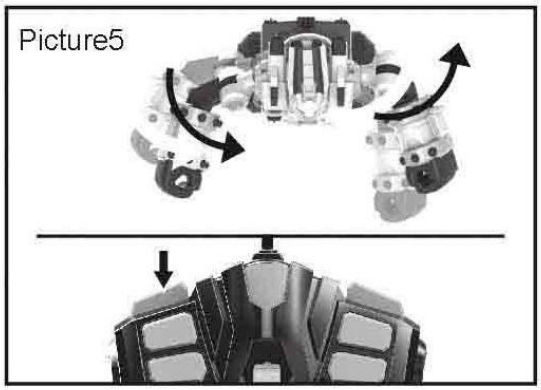

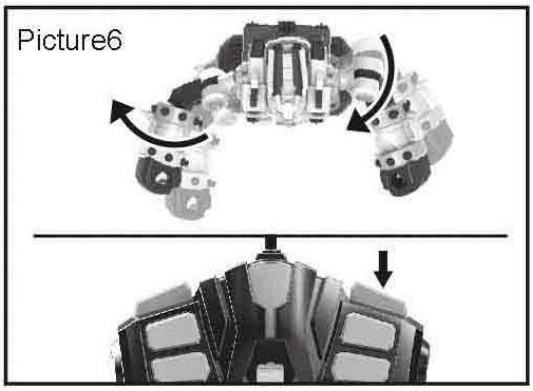

(7) As shown in picture 7: press the button B1 and B2 at the same time on the transmitter, robot will go straight forward.

(8) As shown in picture 8: press the button C1 and C2 at the same time on the transmitter, robot will go straight backward.

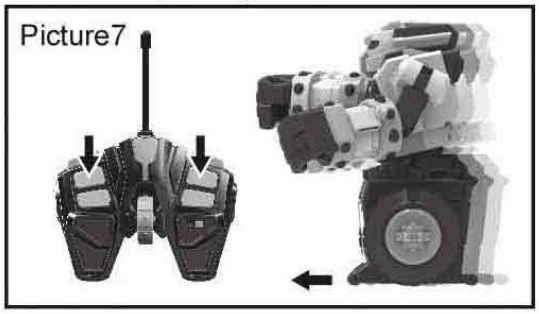

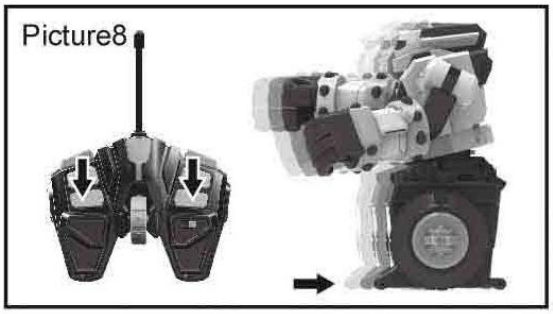

(9) As shown in picture 9, press the button C1+ A1 + B2 at the same time on the transmitter, the upper body of robot clockwise rotation and the lower body counterclockwise rotation, it will swing with a provocative voice.

(10)As shown in picture 10, press the button C2 + A2+ B1 at the same time on the transmitter, the upper body of robot counterclockwise rotation and the lower body clockwise rotation, it will swing with a provocative voice.

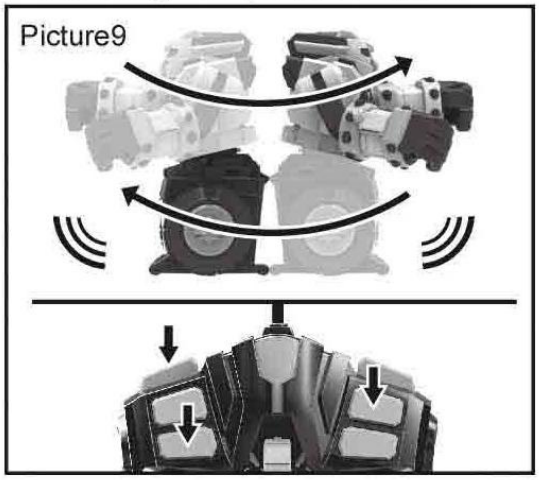

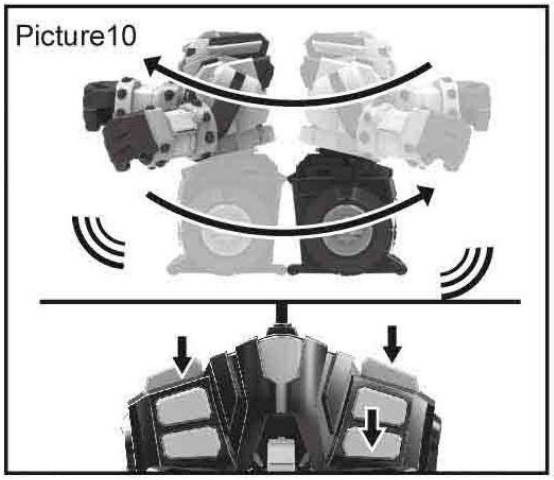

(11) As shown in picture 11, press button B1+C2 at the same time, robot clockwise rotation.

(12) As shown in picture 12, press button B2 +C1 at the same time , robot counterclockwise rotation .

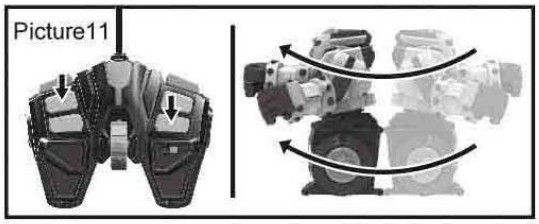

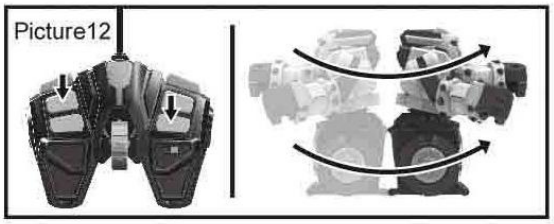

Remarks:

When the robot rotates,you can quickly turn the D1(speed up)button to speed it up.

Then more energy will be collected during the rotation to improve the robot's fighting force.

(13) As shown in picture 13: press the button A1 + D1 at the same time, the upper body of robot clockwise accelerated rotation.

(14)As shown in picture 14: press the button A2 +D1 at the same time, the upper body of robot counterclockwise accelerated rotation.

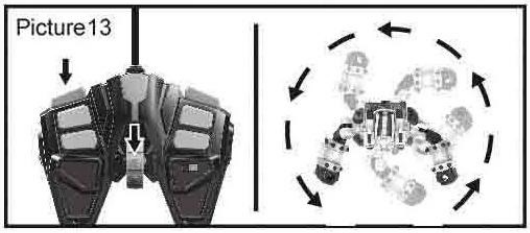

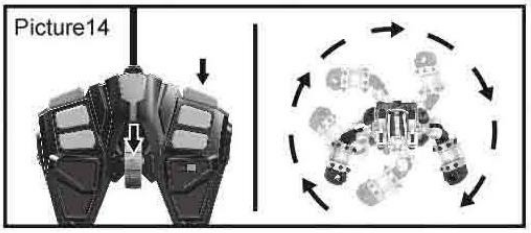

FEATURE

(1)Simulation battle sound renders the fighting atmosphere. The robot is equipped with the appropriate combat weapons, can be freely removed, increase the defense, makes the battle more funny. (as like Picture 1 & Picture 2)

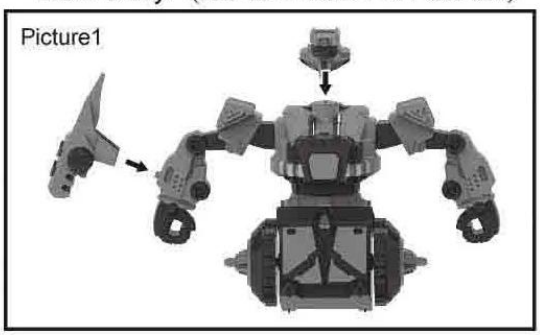

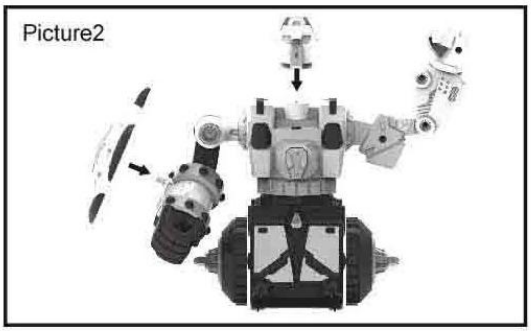

(2)With a stable and solid 360 degree rotation of the waist design, when it is rotating, you can quickly turn the rotation accelerator to accelerate the speed of rotation, so that the rotation will collect more rotating power, in order to improve the combat effectiveness.

(3)During the battle, as long as one robot hit the other one on the chest button, then that one's head will automatically pop, the robot will lose vitality, reactivate it need to reload the head of the robot (as like picture 3)

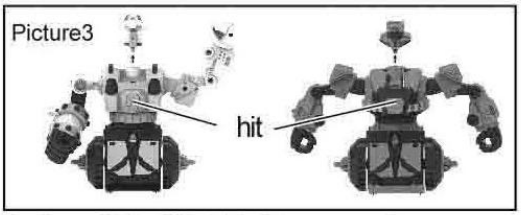

(4)Turn on the robot and transmitter, and press the button of B1+C2+A2 at the same time, (if Press the reverse button, the function is same)
then the robot will swing and make defiant voice, increasing the fun of playing.
(as like shown on page 7: Picture9 &10)

(5)When this product is in a state of power on, there is a reminder of the sound function, every 5 minutes to remind once.

(6)The robot itself uses 27M / 49M, the work frequency is stable, play diversification, domineering cool shape, much loved by the children.

Warning: (1).This product contains small parts, do not swallow to avoid suffocation risk, not suitable for children under three years old.(2).This product contains electrical components, shall not be used in water or in wet environment. Toys can not be connected to more than the recommended number of power supply.(3).Do not let the robot fall from the table and so on, to avoid damage. The packaging and instructions contain important information and should be retained.

(UK) Warning! Not suitable for children under 36 months. Choking hazard. We recommend that you retain this packing for future reference.

(DE) Warnung! Nicht für Kinder unter 36 Monaten geeignet. Verschluckungsgefahr. Sie sollten diese Packung zum späteren Nachschlagen aufbewahren.

(NL) Waarschuwing! Niet geschikt voor kinderen jonger dan 36 maanden. Verstikkingsgevaar. Het wordt aanbevolen deze verpakking te bewaren voor raadpleging in de toekomst.

(FR) Attention ! Ne convient pas aux enfants de moins de 36 mois. Risque d'étouffement. Nous vous recommandons de garder cet emballage afin de vous y référer à l'avenir.

(IT) Avvertenza! Non adatto ai bambini di età inferiore a 36 mesi. Pericolo di soffocamento. Si consiglia di conservare questo imballaggio per una consultazione successiva.

(ES) ¡Advertencia! No adecuado para niños de menos de 36 meses. Peligro de asfixia. Le recomendamos guardar este embalaje para consultas futuras.

(PT) Advertência! Não adequado para crianças com menos de 36 meses. Perigo de asfixia. Recomendamos que guarde esta embalagem para referência futura.

(FI) Varoitus! Ei sovellu alle 36-kuukautisille lapsille. Tukehtumisvaara. Suosittelemme tämän pakkauksen säästämistä myöhempää tarvetta varten.

(NO) Advarsel! Ikke egnet til barn under 36 måneder. Kvelningsfare. Vi anbefaler at du oppbevarer denne innpakningen til fremtidig henvisning.

(SE) Varning! Ej lämpligt för barn under 36 månader. Kvävningsrisk. Vi rekommenderar att du sparar denna förpackning för framtida bruk.

(DK) Advarsel! Ikke velegnet til børn under 36 måneder. Kvælningsfare. Vi anbefaler, at du opbevarer denne emballage til fremtidig brug.

(HU) Figyelmeztetés! Nem felel meg a 36 évesnél fiatalabb gyermekek számára. Fulladás veszély. Ajánljuk, hogy későbbi referencia céljából őrizze meg ezt a csomagolást.

(BG) Внимание! Неподходящо за деца под 36 месеца. Опасност от задавяне. Препоръчваме Ви да запазите тази опаковка за бъдеща референция.

(RO) Atenție! Nu se recomandă copiilor sub 36 de luni. Pericol de sufocare. Vă recomandăm să păstrați ambalajul pentru referințe ulterioare.

(CZ) Varování! Nevhodné pro děti mladší 36 měsíců. Nebezpečí polknutí. Doporučujeme, abyste si tento obal uschovali pro pozdější potřeby.

(SK) Varovanie! Nie je vhodné pre deti do 36 mesiacov. Riziko udusenia. Odporúčame, aby ste si obal uschovali pre použitie v budúcnosti.

(HR) Upozorenje! Nije prikladno za djecu ispod 36 mjeseci starosti. Opasnost od gušenja. Preporučujemo vam da ovu ambalažu sačuvate za buduće potrebe.

(PL) Ostrzeżenie! Nie nadaje się dla dzieci w wieku poniżej 36 miesięcy. Niebezpieczeństwo zadławienia. Zaleca się zachowanie tego opakowania do wglądu.

(LT) Įspėjimas! Netinka vaikams iki 36 mėnesių amžiaus. Pavojus užspringti. Rekomenduojame šią pakuotę išsaugoti dėl informacijos panaudojimo ateityje.

(RU) Внимание! Не предназначено для детей младше 36 месяцев. Существует опасность попадания деталей в дыхательные пути. Рекомендуем сохранить данную упаковку для использования в дальнейшем.

(EE) Hoiatus! Alla 36-kuustele lastele kasutamiseks keelatud. Lämbumisoht. Soovitame hoida selle pakendi tulevikus kasutamiseks alles.

(LV) Brīdinājums! Nav piemērots bērniem, kas jaunāki par 36 mēnešiem. Aizrīšanās briesmas. Mēs iesakām saglabāt šo iepakojumu turpmākai uzziņai.

(TR) Uyarı! 36 aylıktan küçük çocuklar için uygun değildir. Boğulma tehlikesi. Daha sonra başvurmak üzere, kutuyu muhafaza etmenizi öneririz.

(EL) Προειδοποίηση! Δεν είναι κατάλληλο για παιδιά κάτω των 36 μηνών. Κίνδυνος πνιγμού. Σας συνιστούμε να κρατήσετε αυτή τη συσκευασία για μελλοντική παραπομπή.

BATTERY SAFETY INFORMATION

In exceptional circumstances batteries may fluids that can cause a chemical burn injury or ruin your toy(product).To avoid battery leakage:

- Non-rechargeable batteries are not to be recharged.
- Rechargeable batteries are to be removed from the product before being charged (if designed to be removable).
- Rechargeable batteries are only to be charged under adult supervision (if designed to be removable).
- Do not mix alkaline,standard (carbon-zinc),or rechargeable (nickel-cadmium) batteries.
- Do not mix old and new batteries.
- Only batteries of the same or equivalent type as recommended are to be used.
- Batteries are to be inserted with the correct polarity.
- Exhausted batteries are to be removed from the product.
- The supply terminals are not to be short- circuited.
- Dispose of battery (ies) safely.
- Do not dispose of this product in a fire.The batteries inside may explode or leak.

CRAZON®

© 2017 CRAZON.Inc

CE FC RoHS

user manual appendix

Warning: changes or modifications not expressly approved by the party responsible for compliance could void the user's authority to operate the equipment.

This equipment has been tested and found to comply with the limits for a Class B digital device, pursuant to Part 15 of the FCC Rules. These limits are designed to provide reasonable protection against harmful interference in a residential installation. This equipment generates, uses and can radiate radio frequency energy and, if not installed and used in accordance with the instructions, may cause harmful interference to radio communications. However, there is no guarantee that interference will not occur in a particular installation.

If this equipment does cause harmful interference to radio or television reception, which can be determined by turning the equipment off and on, the user is encouraged to try to correct the interference by one or more of the following measures:

-- Reorient or relocate the receiving antenna.

-- Increase the separation between the equipment and receiver.

-- Connect the equipment into an outlet on a circuit different from that to which the receiver is connected.

-- Consult the dealer or an experienced radio/TV technician for help.