TX AIS™ Installation and Operations Manual

HUMMINBIRD®

ACCESSORY MANUAL

Thank you!

Thank you for choosing Humminbird®, the #1 name in marine electronics. Humminbird has built its reputation by designing and manufacturing top quality, thoroughly reliable marine equipment. Your Humminbird is designed for trouble-free use in even the harshest marine environment. In the unlikely event that your Humminbird does require repairs, we offer an exclusive Service Policy. For complete details, see the separate warranty card included with your unit. We encourage you to read this manual carefully in order to get the full benefit from all the features and applications of your Humminbird product.

Contact Humminbird Customer Service at **humminbird.com** or call **1-800-633-1468.**

Humminbird® is a registered trademark of Johnson Outdoors Marine Electronics, Inc.

NMEA 2000® is a registered trademark of the National Marine Electronics Association.

Table of contents

1 Notices 1
1.1 Safety warnings 1
1.2 Using the USB Connection 2
1.3 General Notices 2
2 About your AIS class B transceiver 8
2.1 About AIS 8
2.2 Static and dynamic vessel data 9
2.3 Important information for U.S. customers 9
2.4 What's in the box? 11
3 Installation 16
3.1 Preparing for Installation 16
3.2 Installation procedures 19
4 Configuring your AIS transceiver 33
4.1 Switching on your AIS transceiver for the first time 33
4.2 Configuring your AIS transceiver 34
4.3 Introduction to proAIS2 34
4.4 Installing proAIS2 35
4.5 Configuration using proAIS2 35
5 Operation 36
5.1 Using the AIS transceiver 36
5.2 Switch functions 36
5.3 Using proAIS2 with your AIS transceiver 36
5.4 Indicator functions 37
6 Troubleshooting 39
7 Specifications 42

Table of figures

Figure 1 Items included with the product 11
Figure 2 AIS transceiver overview 13
Figure 3 Electrical connections to the AIS transceiver 15
Figure 4 Typical installation configuration 16
Figure 5 AIS transceiver dimensions 20
Figure 6 AIS transceiver mounting 21
Figure 7 GPS antenna mounting and connection 22
Figure 8 Position of the VHF antenna connector 23
Figure 9 Position of the Power and Data connector 24
Table 1 Colour coding of wires in the accessory cable 25
Figure 10 Connecting an external switch 26
Figure 11 Connecting to the NMEA 0183 data port 28
Figure 12 Position of the NMEA 2000 connector 29
Figure 13 USB Connection or inserting an SD Card 30
Figure 14 Connecting the power supply 32
Table 2 Indicator functions 33
Figure 15 Indicator location on the AIS transceiver unit 37

1 Notices

When reading this manual please pay attention to warnings marked with the warning triangle shown on the left. These are important messages for safety, installation, and usage of the product.

1.1 Safety warnings

This equipment must be installed in accordance with the instructions provided in this manual.

This AIS transceiver is an aid to navigation and must not be relied upon to provide accurate navigation information. AIS is not a replacement for vigilant human lookouts and other navigation aids such as RADAR. The performance of the transceiver may be seriously impaired if not installed as instructed in the user manual, or due to other factors such as weather and/or nearby transmitting devices. Compatibility with other systems may vary and is reliant on the third party systems recognizing the standard outputs from the transceiver. The manufacturer reserves the right to update and change these specifications at any time and without notice.

Do not install this equipment in a flammable atmosphere such as in an engine room or near to fuel tanks

This device should not be used as a navigational aid to prevent collision, grounding, vessel damage, or personal injury. When the vessel is moving, water depth may change too quickly to allow time for you to react. Always operate the vessel at very slow speeds if you suspect shallow water or submerged objects.

1.2 Using the USB Connection

The USB port built into this product is not isolated from the vessel power supply, VHF antenna ground or GPS Ground. Please observe the following procedures when connecting the USB port to avoid grounding problems.

If the computer is permanently installed on the vessel and/or electrically connected to any other vessel equipment, including power supplies, it is recommended that connection is made using the NMEA 0183 or NMEA 2000 interfaces. These benefit from being specifically designed for use in the marine environment and provide isolated and robust communication between your devices.

If a battery powered laptop is being used, then it is recommended that you always switch off the computer before connecting the USB cable.

1.3 General Notices

Position source

All marine Automatic Identification System (AIS) transceivers utilise a satellite based location system such as the Global Positioning Satellite (GPS) network.

The accuracy of a GPS position fix is variable and is affected by factors such as the antenna positioning, how many satellites are used to determine a position, and how long satellite information has been received.

Compass safe distance

The compass safe distance of this unit is 0.2m or greater for 0.3° deviation.

RF emissions notice

Warning! The AIS transceiver generates and radiates radio frequency electromagnetic energy. This equipment must be installed and operated according to the instructions contained in this manual. Failure to do so can result in personal injury and/or AIS transceiver malfunction.

Warning! Never operate the AIS transceiver unless it is connected to a VHF antenna.

Warning! To maximise performance and minimise human exposure to radio frequency electromagnetic energy, you must make sure that the antenna is mounted at least 1.5 metres away from the AIS transceiver and is connected to the AIS transceiver before power is applied. The system has a Maximum Permissible Exposure (MPE) radius of 1.5m. This has been determined assuming the maximum power of the AIS transceiver and using antennas with a maximum gain of 3dBi. The antenna should be mounted 3.5m above the deck in order to meet RF exposure requirements. Higher gain antennas will require a greater MPE radius. Do not operate the unit when anyone is within the MPE radius of the antenna (unless they are shielded from the antenna field by a grounded metallic barrier). The antenna should not be co-located or operated in conjunction with any other transmitting antenna. The required antenna impedance is 50 Ohms.

Warranty

This product is supplied with a standard warranty as defined in the accompanying warranty information.

Disassembly and repair of this electronic unit should only be performed by authorized service personnel. Any modification of the serial number or attempt to repair the original equipment or accessories by unauthorized individuals will void the warranty.

Disposal of this product and packaging

Please dispose of the AIS transceiver in accordance with the European WEEE Directive or with the applicable local regulations for disposal of electrical equipment.

Every effort has been made to ensure the packaging for this product is recyclable. Please dispose of the packaging in an environmentally friendly manner.

Accuracy of this manual

The AIS transceiver may be upgraded from time to time, and future versions of the AIS transceiver may therefore not correspond exactly with this manual. Information contained in this manual is liable to change without notice. The manufacturer of this product disclaims any liability for consequences arising from omissions or inaccuracies in this manual and any other documentation provided with this product.

This manual was written in English and may have been translated to another language. Humminbird is not responsible for incorrect translations or discrepancies between documents.

Declaration of conformity

The manufacturer of this product declares that this product is in compliance with the essential requirements and other provisions of the R&TTE directive. The declaration of conformity is provided with the product document pack.

CE0168 The product carries the CE mark, notified body number and alert symbol as required by the R&TTE directive.

The product is intended for sale in the following member states: Great Britain, France, Spain, Sweden, Austria, Netherlands, Portugal, Denmark, Norway, Belgium, Italy, Finland, Ireland, Luxembourg, Germany and Czech Republic.

FCC notice

This equipment has been tested and found to comply with the limits for a class B digital device, pursuant to part 15 of the FCC Rules. These limits are designed to provide reasonable protection against harmful interference in a residential installation. This equipment generates, uses and can radiate radio frequency energy and, if not installed and used in accordance with the instructions, may cause harmful interference to radio communications.

This device complies with part 15 of the FCC Rules. Operation is subject to the following two conditions: (1) This device may not cause harmful interference, and (2) this device must accept any interference received, including interference that may cause undesired operation.

Changes or modifications not expressly approved by the party responsible for compliance could void the user's authority to operate the equipment.

WARNING: It is a violation of the rules of the Federal Communications Commission to input an MMSI that has not been properly assigned to the end user, or to otherwise input any inaccurate data in this device.

Industry Canada notice

This device complies with Industry Canada licence-exempt RSS standard(s). Operation is subject to the following two conditions:

1. This device may not cause interference, and
2. This device must accept any interference, including interference that may cause undesired operation of the device.

This Class B digital apparatus complies with Canadian ICES-003.

Le présent appareil est conforme aux CNR d'Industrie Canada applicables aux appareils radio exempts de licence. L'exploitation est autorisée aux deux conditions suivantes :

1. L'appareil ne doit pas produire de brouillage, et
2. L'utilisateur de l'appareil doit accepter tout brouillage radioélectrique subi, même si le brouillage est susceptible d'en compromettre le Fonctionnement.

Cet appareil numérique de la classe B est conforme à la norme NMB-003 du Canada.

ROHS Statement

Product designed and intended as a fixed installation or part of a system in a vessel may be considered beyond the scope of Directive 2002/95/EC of the European Parliament and of the Council of 27 January 2003 on the restriction of the use of certain hazardous substances in electrical and electronic equipment.

Attention International Customers

Products sold in the U.S. are not intended for use in the international market. Humminbird international units provide international features and are designed to meet country and regional regulations. Languages, maps, time zones, units of measurement, and warranty are examples of features that are customized for Humminbird international units purchased through our authorized international distributors.

To obtain a list of our international distributors, please visit our Web site at humminbird.com or contact Humminbird Customer Service at (334) 687-6613.

Environmental Compliance Statement

It is the intention of Johnson Outdoors Marine Electronics, Inc. to be a responsible corporate citizen, operating in compliance with known and applicable environmental regulations, and a good neighbor in the communities where we make or sell our products.

WEEE Directive

EU Directive 2002/96/EC "Waste of Electrical and Electronic Equipment Directive (WEEE)" impacts most distributors, sellers, and manufacturers of consumer electronics in the European Union. The

WEEE Directive requires the producer of consumer electronics to take responsibility for the management of waste from their products to achieve environmentally responsible disposal during the product life cycle.

WEEE compliance may not be required in your location for electrical and electronic equipment (EEE), nor may it be required for EEE designed and intended as fixed or temporary installation in transportation vehicles such as automobiles, aircraft, and boats. In some European Union member states, these vehicles are considered outside the scope of the Directive, and EEE for those applications can be considered excluded from the WEEE Directive requirement.

This symbol (WEEE wheelie bin) on product indicates the product must not be disposed of with other household refuse. It must be disposed of and collected for recycling and recovery of waste EEE. Johnson Outdoors Marine Electronics, Inc. will mark all EEE products in accordance with the WEEE Directive. It is our goal to comply in the collection, treatment, recovery, and environmentally sound disposal of those products; however these requirements do vary within European Union member states. For more information about where you should dispose of your waste equipment for recycling and recovery and/or your European Union member state requirements, please contact your dealer or distributor from which your product was purchased.

2 About your AIS class B transceiver

2.1 About AIS

The marine Automatic Identification System (AIS) is a location and vessel information reporting system. It allows vessels equipped with AIS to automatically and dynamically share and regularly update their position, speed, course and other information such as vessel identity with similarly equipped vessels. Position is derived from the Global Positioning System (GPS) and communication between vessels is by Very High Frequency (VHF) digital transmissions.

There are a number of types of AIS devices as follows:

- **Class A transceivers.** These are similar to class B transceivers, but are designed to be fitted to large vessels such as cargo ships and large passenger vessels. Class A transceivers transmit at a higher VHF signal power than class B transceivers and therefore can be received by more distant vessels. They also transmit more frequently. Class A transceivers are mandatory on all vessels over 300 gross tonnes on international voyages and certain types of passenger vessels under SOLAS regulations.
- **Class B transceivers.** Similar to class A transceivers in many ways, but are normally lower cost due to the less stringent performance requirements. Class B transceivers transmit at a lower power and at a lower reporting rate than class A transceivers.
- **AIS base stations.** AIS base stations are used by Vessel Traffic Systems to monitor and control the transmissions of AIS transceivers.
- **Aids to Navigation (AtoN) transceivers.** AtoN's are transceivers mounted on buoys or other hazards to shipping which transmit details of their location to the surrounding vessels.

- **AIS receivers.** AIS receivers will generally receive transmissions from class A transceivers, class B transceivers, AtoN's, and AIS base stations but do not transmit any information about the vessel on which they are installed.

This product is an AIS Class B transceiver.

2.2 Static and dynamic vessel data

There are two categories of information transmitted by an AIS transceiver: static and dynamic data.

The vessel's dynamic data, which includes location, speed over ground (SOG) and course over ground (COG), is calculated automatically using the internal GPS receiver.

Static data is information about the vessel which must be programmed into the AIS transceiver. This includes:

- Maritime Mobile Service Identity (MMSI)
- Vessel name
- Vessel call sign (if available)
- Vessel type
- Vessel dimensions

In most countries the operation of an AIS transceiver is included under the vessel's marine VHF licence provisions. The vessel on to which the AIS unit is to be installed must therefore possess a current VHF radiotelephone licence which lists the AIS system, vessel Call Sign, and MMSI number.

An MMSI number is required in order for the AIS transceiver to operate. Please contact the relevant authority in your country for more information.

2.3 Important information for U.S. customers

There are specific laws in the USA regarding the configuration of AIS class B transceivers.

If you are a U.S. resident and intend to use your AIS class B transceiver in U.S. waters, you should make sure that your retailer has configured your product prior to supplying it to you. If your AIS transceiver has not been pre-configured, please contact Humminbird Customer Service for details of how to have it configured.

In the United States of America, the MMSI and static data must only be entered by a qualified installer. The end user of the equipment is not authorized to enter their own vessel data.

2.4 What's in the box?

Figure 1 shows the items included with your AIS transceiver purchase. The following sections give a brief overview of each item. Please ensure all items are present, and if any of the items are not present, contact Humminbird Customer Service.

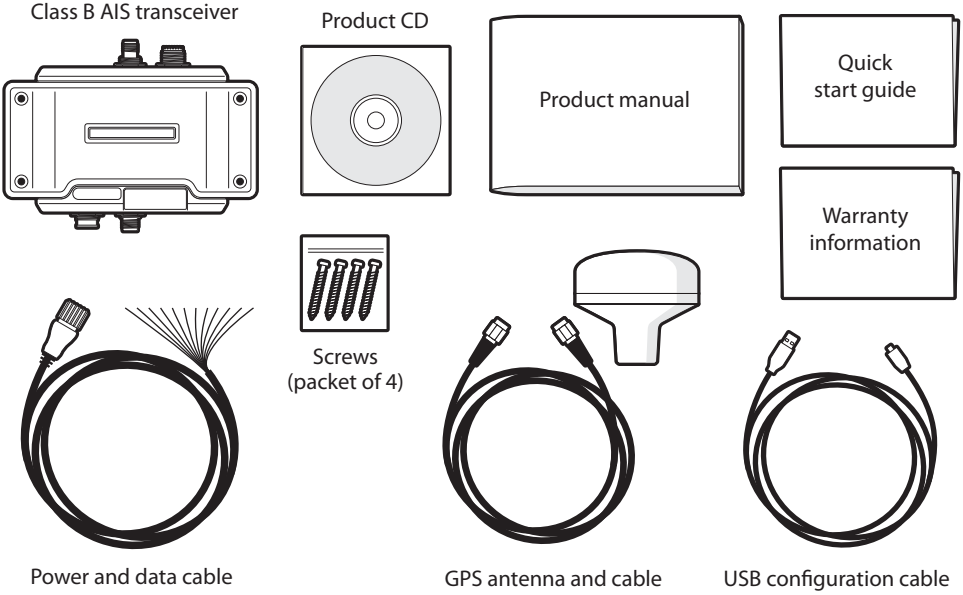

Figure 1 Items included with the product

- **Support tools CD**

The CD supplied with the package contains the following:

- proAIS2 software tool necessary to configure the AIS transceiver. Please refer to section 4 for details of the configuration process and how to use the proAIS2 tool.
- USB drivers required to connect to the AIS transceiver via USB.
- Alternative language versions of this manual.

- **Quick start guide**

The quick start guide provides a one page reference for the installation process.

- **Product manual**

This document is the product manual and should be read thoroughly prior to any attempt to install or use the AIS transceiver.

- **Fixing screws**

Four fixing screws are provided with the product for mounting of the AIS transceiver. Please refer to section 3.2 for details of how to mount the AIS transceiver.

- **AIS transceiver unit**

Figure 2 shows an overview of the AIS transceiver unit.

The AIS transceiver has a number of indicators which provide information to the user about the status of the AIS transceiver. Please refer to section 5.4 for more details of indicator functions.

The AIS transceiver has an internal GPS antenna. You should ensure that the transceiver is mounted where it has a clear view of the sky, or alternatively connect an external GPS antenna, which is available from Humminbird Customer Service as an accessory.

- **Power, data and USB cable**

The power and data cable connects to the AIS transceiver and enables connection to power, NMEA 0183, and an external silent mode switch.

Do not attempt to adjust or remove the fixings next to each of the four mounting holes. These fixings form part of the sealing of the AIS transceiver and any modification could affect the product's performance and will invalidate the product's warranty.

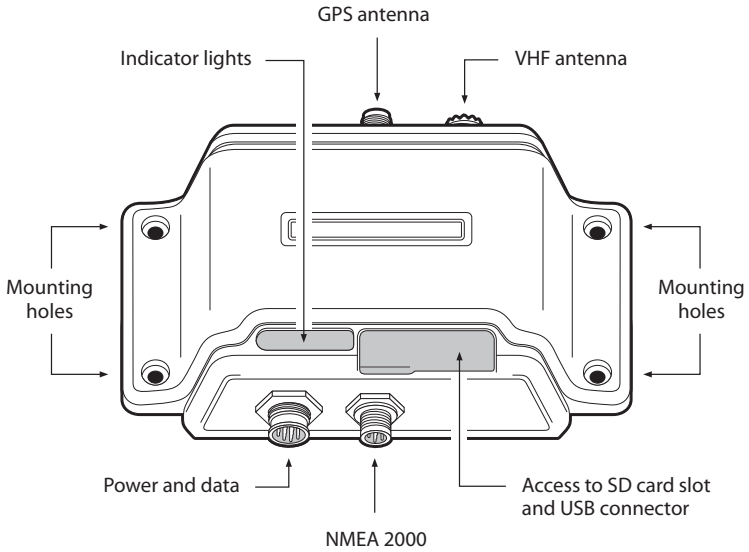

Figure 2 AIS transceiver overview

Electrical connections

The AIS transceiver has the following electrical connections:

- Power supply
- Two independent NMEA 0183 data ports for connection to chartplotters and other NMEA 0183 compatible equipment
- USB for connection to a PC or Mac
- External switch input for silent mode control
- NMEA 2000 port for connection to NMEA 2000 compatible equipment

In addition there are two other connections for the GPS antenna and the VHF antenna. Figure 3 shows an overview of the electrical connections to the AIS transceiver.

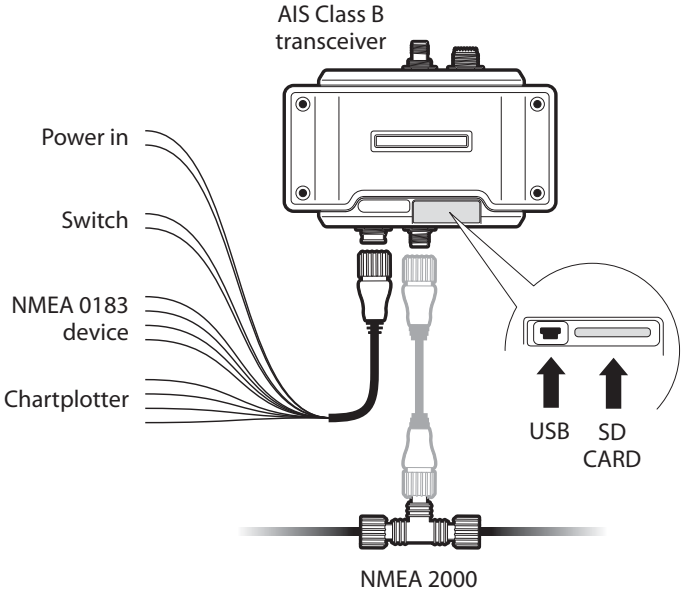

Figure 3 Electrical connections to the AIS transceiver

3 Installation

3.1 Preparing for Installation

Figure 4 shows a typical installation configuration for the AIS transceiver. Please take the time to familiarise yourself with the system elements and their connections prior to attempting installation.

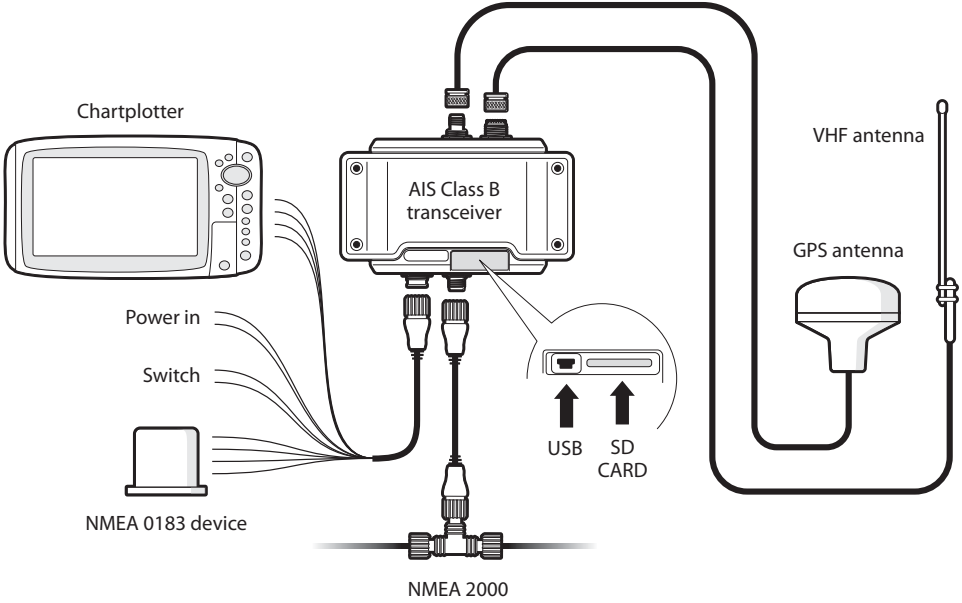

Figure 4 Typical installation configuration

In addition to the items provided with your AIS transceiver, the following items will be required for installation:

VHF antenna

Connection to a suitable VHF antenna will be required for the AIS transceiver to operate. A standard marine band VHF antenna such as that used with VHF voice radios will be sufficient. Please take note of the warnings in section 1 regarding the use of antennas.

Alternatively, if you wish to use an existing VHF antenna, antenna splitter products are available which allow the existing antenna to be used with two radio devices, such as a VHF voice radio and the AIS transceiver.

When selecting an AIS antenna splitter, make sure it is capable of operation with an AIS transceiver. Some AIS antenna splitters are designed to work only with AIS receivers. Please check with your dealer to ensure you purchase the correct type of antenna splitter.

GPS antenna

The GPS antenna is provided with 10 metres of cable. If this is not sufficient to reach between the desired GPS antenna location and the AIS transceiver unit, you will need an extension cable. Please contact your Humminbird Customer Service for details. For reference the GPS antenna connector type on the AIS transceiver unit is TNC receptacle, and it is intended to mate with a TNC jack connector.

Optional switch

A switch can be connected to the transceiver to enable and disable 'silent mode' (see section 3.2). A latching toggle switch is required to use this feature.

VHF antenna cable

Please check that the VHF antenna you intend to use has sufficient cable to reach between the VHF antenna and the AIS transceiver unit. If it is not sufficient you will need an extension cable. Please contact Humminbird Customer Service for details of suitable products. For reference the VHF antenna

connector type on the AIS transceiver unit is SO 239, and it is intended to mate with a PL 259 connector.

Power and data cable

The AIS transceiver unit is supplied with a two meter long power and data cable as an accessory. If you require longer cables to reach your power supply, please ensure the cables are capable of carrying currents of up to 2A peak and 200mA on average. Means of connecting the cables together will also be required. The use of Scotchlok™ connectors is recommended for this purpose.

Chartplotter

To display received AIS messages as other vessels on your chartplotter, you will need to connect your AIS transceiver to your chartplotter. Please refer to the user manual supplied with your chartplotter for details of how to connect and configure your chartplotter for use with AIS devices. For general guidance your chartplotter should be configured to accept NMEA data at 38400 baud (sometimes referred to as 'NMEA HS' in the plotter configuration menu). You may also need to enable the display of AIS targets in the chart options.

Alternatively if you use an NMEA 2000 network on your vessel, it is possible to connect the AIS transceiver to the NMEA 2000 network via a suitable cable. Please refer to your dealer for details of NMEA 2000 cables.

Connection to a PC or Mac

If you choose to use a PC or Mac with suitable charting software to display received AIS messages as other vessels, this can be accomplished by connecting the USB connector to the USB port using the supplied USB cable.

3.2 Installation procedures

Before beginning installation of your AIS transceiver, please ensure you have the necessary additional items as detailed in section 3.1. It is strongly recommended that you read all of the instructions in this manual prior to installation.

If after reading this manual you are unsure about any element of the installation process, please contact Humminbird Customer Service for assistance.

The following sections explain the installation process step by step for each of the main elements of the system.

Step 1 - Installing the AIS transceiver

Please note the following guidelines when selecting a location for your AIS transceiver:

- The AIS transceiver must be fitted in a location where it is at least 0.2m from a compass or any magnetic device.
- There should be adequate space around the AIS transceiver for routing of cables. See Figure 5 for details of the AIS transceiver dimensions.
- The ambient temperature around the AIS transceiver should be maintained between -15°C and +55°C.
- The AIS transceiver should not be located in a flammable or hazardous atmosphere such as in an engine room or near to fuel tanks.
- The AIS transceiver is fully waterproof to ingress protection rating IPx6, however it is recommended that the AIS transceiver is not subjected to extended periods of exposure to spray or submersion.
- It is recommended that the AIS transceiver is installed in a 'below decks' environment.
- It is acceptable to mount the AIS transceiver either vertically or horizontally.

- The product is supplied with four self tapping screws for attachment of the AIS transceiver to a suitable surface. Please refer to Figure 6 for guidance.
- The AIS transceiver should be mounted in a location where the indicators are readily visible as these provide important information on the status of the AIS transceiver.

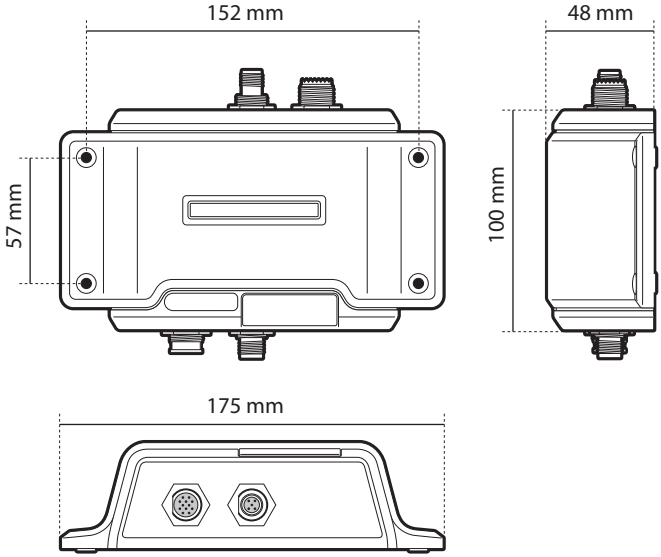

Figure 5 AIS transceiver dimensions

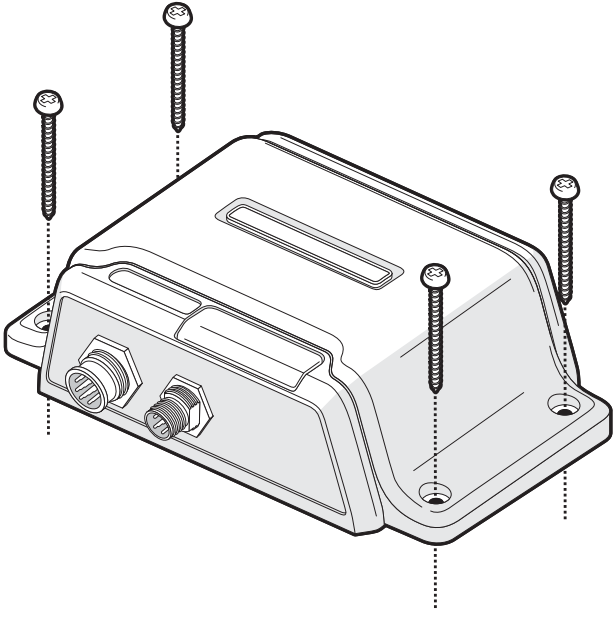

Figure 6 AIS transceiver mounting

Step 2 - Installing an optional external GPS antenna

- For mounting of the optional external GPS antenna, you will need a one inch 14 TPI thread pole.
- Confirm the GPS antenna has a good clear view of the entire sky.
- It is not recommended that the GPS antenna is mounted up a mast where the motion of the vessel will cause the antenna to swing and potentially reduce the accuracy of the GPS position.
- Do not mount your antenna in the direct path of a radar transmitter.

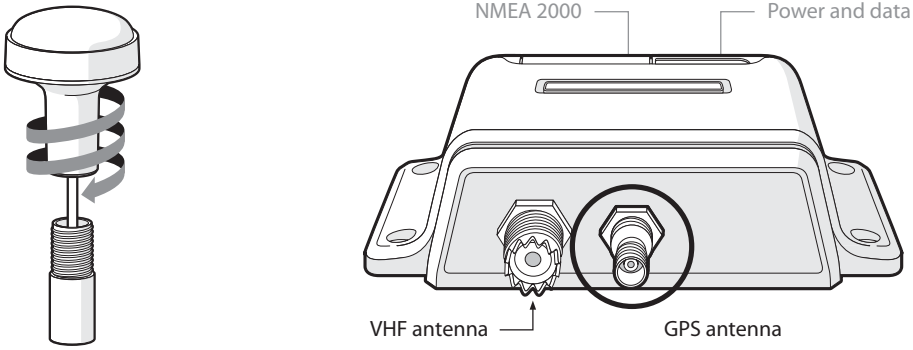

Figure 7 GPS antenna mounting and connection

1. Feed the ten metre long cable attached to the GPS antenna cable through the pole, and screw the antenna onto the pole mount as shown in Figure 7.
2. Route the cable to your AIS transceiver unit, adding any necessary extension cables.
3. Connect the cable from the GPS antenna to the GPS connector on the AIS transceiver as shown in Figure 7.

Step 3 - Connecting the VHF antenna

1. Route the cable from the VHF antenna to the AIS transceiver, and connect it to the VHF connector on the AIS transceiver as shown in Figure 8.

A standard marine band VHF antenna or AIS antenna should be used with the AIS transceiver. The connector type on the AIS transceiver is SO239. Your chosen VHF antenna requires a PL259 connector to mate with this. If your VHF antenna does not use this type of connector, please contact Humminbird Customer Service for details of available adaptors.

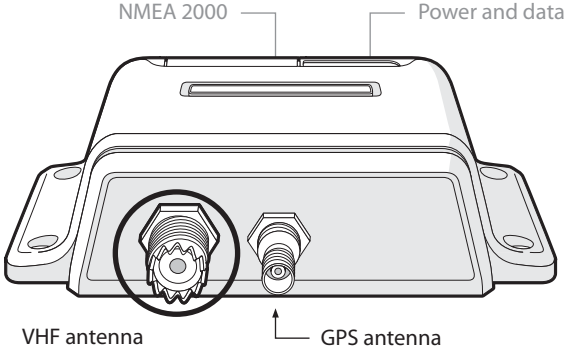

Figure 8 Position of the VHF antenna connector

Step 4 - Connecting the accessory cable

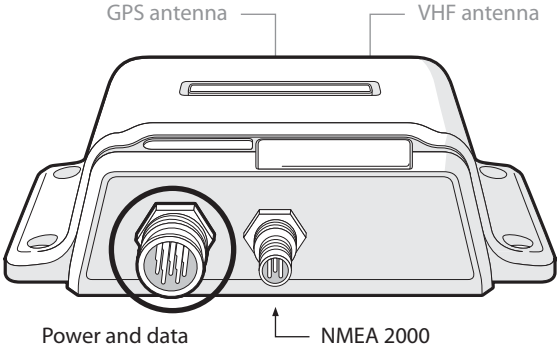

Figure 9 Position of the Power and Data connector

An accessory cable is supplied with the product to provide connections to power, the external switch, and NMEA 0183 data ports. The cable has a pre-moulded connector at one end, which should be connected to the connector on the unit marked 'PWR/DATA'. The other end of the cable has twelve colour coded bare wires ready for connection. Table 1 lists the function of each colour coded wire for reference.

Wire colour	Description	Function
Red	Power in +	Power supply connections
Black	Power in -	

Light Green	Switch input+	External switch connection for silent mode
Orange	Switch input-	
Brown	NMEA 0183 port 1 TX+	High speed NMEA 0183 output (38,400baud) intended for connection to chartplotters
Blue	NMEA 0183 port 1 TX-	
White	NMEA 0183 port 1 RX+	
Green	NMEA 0183 port 1 RX-	
Purple	NMEA 0183 port 2 TX+	Low speed NMEA 0183 input (4,800baud) intended for connection to other NMEA 0183 compatible sensors for multiplexing of data to the chartplotter
Pink	NMEA 0183 port 2 TX-	
Grey	NMEA 0183 port 2 RX+	
Yellow	NMEA 0183 port 2 RX-	

Table 1 Colour coding of wires in the accessory cable

Please check your wiring very carefully before applying power to the product. Failure to wire the product correctly could result in permanent damage.

Step 5 - Connecting an external switch

A toggle switch can be connected to the AIS transceiver to provide remote control of silent mode. Connection of an external switch to toggle silent mode is optional and not essential for normal operation of the product.

1. Connect the toggle switch between the light green and orange wires as shown in Figure 10.

Do not connect a voltage source across the switch inputs as this may damage the transceiver.

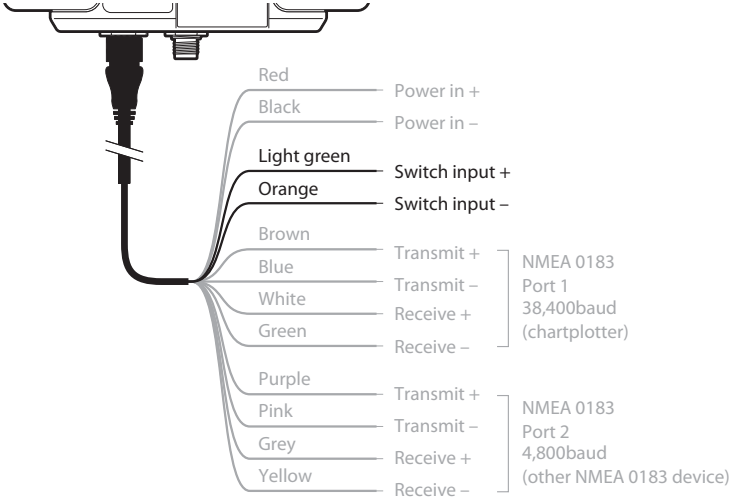

Figure 10 Connecting an external switch

Step 6 - Connecting to NMEA 0183 compatible equipment

The two independent NMEA 0183 data ports provide connection to your chartplotter and other NMEA 0183 compatible equipment. Each port consists of two wires colour coded as shown in Table 1, and in Figure 11.

1. Connect the wires to the appropriate connections on your NMEA 0183 compatible equipment. Please refer to your equipment manual for more information.

The AIS transceiver has a high speed output port which operates at 38,400baud and a low speed input port which operates at 4,800baud. The high speed port is intended primarily to connect to a chartplotter, while the low speed port is intended to connect to other NMEA 0183 devices. A multiplexing feature is provided, which means any messages that are received via the low speed port are automatically transmitted via the high speed port. This is particularly useful when using a chartplotter having only a single NMEA 0183 port. An additional sensor such as a gyro-compass can be connected to the AIS transceiver via the low speed port, and the AIS transceiver can be connected via the high speed port to the chartplotter, resulting in the chartplotter receiving both AIS information and heading information simultaneously. Configure your equipment to the correct baud rate. The baud rate is determined by the port you have chosen for connection.

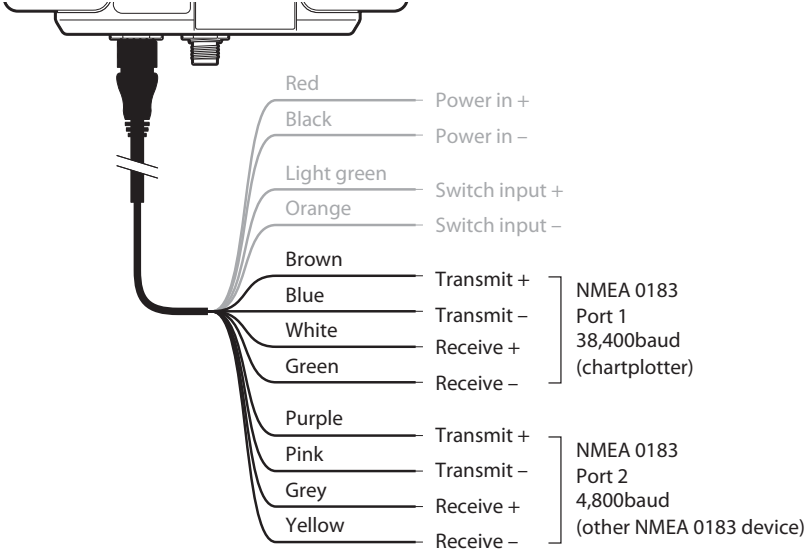

Figure 11 Connecting to the NMEA 0183 data port

Step 7- Connection to an NMEA 2000 network (optional)

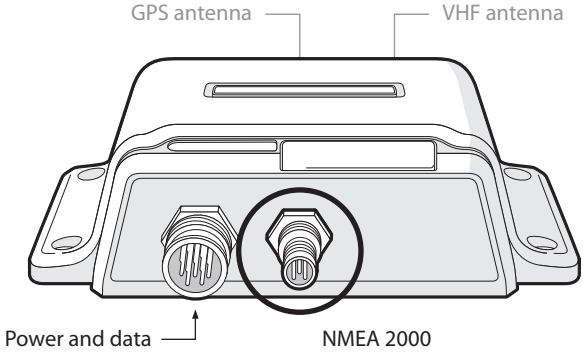

Figure 12 Position of the NMEA 2000 connector

The AIS transceiver can be connected to an NMEA 2000 network by a suitable NMEA 2000 network cable available from your local dealer. If your vessel has an NMEA 2000 network, please refer to the relevant documentation for your NMEA 2000 equipment. Once connected, and with your chartplotter also connected to your NMEA 2000 network, you can receive AIS targets on your chartplotter.

Step 8 - USB Connection (optional)

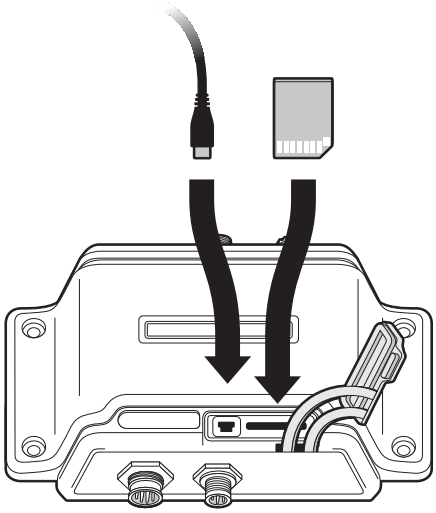

Figure 13 USB Connection or inserting an SD Card

1. Lift the rubber cover on the front of the unit. Insert a USB cable or an SD card as shown.

If connecting to a USB port on a computer, please take note of the warnings about vessel grounding in the Section 1.2 of this manual.

The AIS transceiver is supplied with a USB port for connection to a PC or Mac. The USB connector can be connected directly to the USB port on the PC or Mac via the supplied USB cable. To enable connection of the AIS transceiver to a PC, use the product CD to install the USB drivers. Driver installation is typically not required for use with a Mac.

To install the drivers please follow the steps below:

1. Insert the product CD into the PC and navigate to the USB drivers folder.
2. Double click the setup.exe file to launch the installer.
3. Follow the on-screen installation instructions to complete installation.
4. Once installed the AIS unit can be connected to the PC. The USB drivers will be installed automatically, and the AIS will appear as a new COM port device.
5. Select the AIS COM port and a baud rate of 38,400 in PC based navigation software to make use of the AIS data.

If the USB connection is removed from the PC or Mac during use, you must reset the connection before further use. To reset the connection, disconnect and then reapply power to the AIS before closing and relaunching any PC or Mac applications using the USB connection. Finally, reconnect the USB cable between the PC or Mac and the AIS transceiver.

Step 9 - Connecting to a power supply

The AIS transceiver requires a 12V or 24V power supply typically provided by the vessel's battery.

It is recommended that crimped and soldered lugs are used to connect the AIS transceiver to the power source. It is recommended that the power supply is connected via a suitable circuit breaker and/or 3A fuse block.

1. Connect the red wire to a 12V or 24V power supply positive terminal.
2. Connect the black wire to the supply negative terminal.

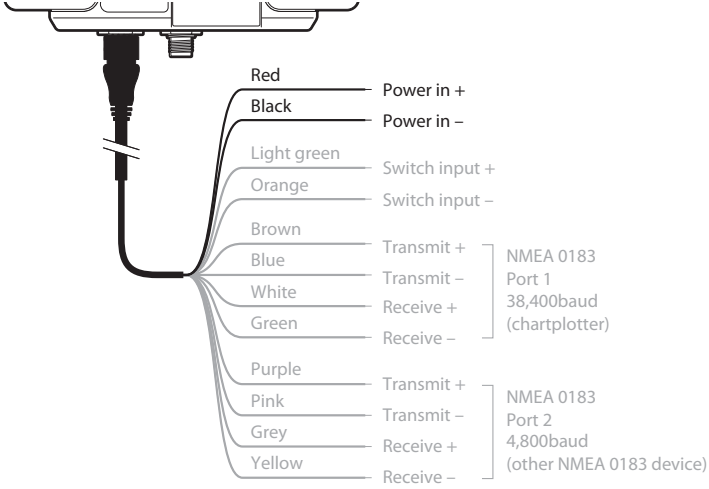

Figure 14 Connecting the power supply

4 Configuring your AIS transceiver

Until it is correctly configured, your AIS class B transceiver will only receive AIS messages and will not transmit AIS messages.

4.1 Switching on your AIS transceiver for the first time

A few seconds after power is applied to the AIS transceiver, the indicators on the unit will illuminate in a pattern dependent on the configuration state of the unit. Table 2 shows the functions of the four indicators.

Indicator	Function
Green	Unit is powered up and operating normally
Amber	Unit is in a 'transmit time-out' period
Red	Unit has experienced an error
Blue	Silent mode is activated

Table 2 Indicator functions

If the AIS transceiver has been pre-configured, the amber indicator will illuminate until a transmission has been sent by the unit. This may take several minutes as the transceiver must acquire a GPS position fix prior to transmitting its first message.

If the transceiver has not been pre-configured, the amber and red indicators will be illuminated until the configuration process has been completed.

4.2 Configuring your AIS transceiver

There are two potential ways in which your AIS transceiver can be configured:

- Configuration in advance by your dealer or installer. If your AIS transceiver has been configured for you by your dealer or installer, you can proceed to section 5.
- Configuration using proAIS2.

If it is acceptable to do so under your local legislation, it is possible to configure your AIS transceiver yourself using the proAIS2 software provided with the product.

U.S. Customers only: It is a violation of the rules of the Federal Communications Commission for the end user to programme the vessel data. The vessel data must only be programmed by a qualified installer. If your AIS transceiver has not been pre-configured for you, please contact Humminbird Customer Service for asistance on how to have the AIS transceiver configured by a qualified installer.

4.3 Introduction to proAIS2

Included in the CD supplied with your product is a software tool called 'proAIS2'. proAIS2 provides the facility to configure, monitor, and diagnose issues with your AIS transceiver. proAIS2 can provide assistance when ensuring that a satisfactory GPS signal is being received. It can also display alarm messages generated by the transceiver regarding poor VHF antenna quality or that the power being supplied is outside the range specified for operation. proAIS2 can also be used to activate 'silent mode' which disables AIS transmissions.

Section 4.4 provides instructions on how to install proAIS2. Section 4.5 provides instructions on how to configure the AIS transceiver using proAIS2. Further help on how to use the features of proAIS2 can be found in the Help menu within the proAIS2 tool.

proAIS2 is designed to be installed and used with a PC or Mac connected to the AIS transceiver via USB using the supplied USB cable.

4.4 Installing proAIS2

1. Insert the CD into your PC or Mac, click the setup.exe file and follow the on-screen prompts.
2. If a security warning appears, click 'Install' to continue with the installation.
3. When installation is completed, proAIS2 will launch automatically, and a start menu folder and shortcut will be created for future use.

4.5 Configuration using proAIS2

For configuration purposes only, it is possible to power the AIS transceiver via its USB connection. This is useful if you wish to configure your AIS transceiver away from the vessel power supply. The AIS transceiver will not transmit any data or acquire a GPS position fix whilst powered by USB.

You will require the following information in order to configure your AIS transceiver:

- MMSI
- Vessel name
- Vessel type
- Call sign
- Vessel dimensions and position of your GPS antenna installation.

For further assistance in configuring your AIS transceiver, please refer to the Help menu within proAIS2.

It is important to enter all vessel data accurately. Failure to do so could result in other vessels failing to identify your vessel correctly. The vessel MMSI can only be programmed once using proAIS2. Please take care to programme your MMSI correctly. If you need to change the MMSI for any reason, contact Humminbird Customer Service to have the MMSI reset.

5 Operation

5.1 Using the AIS transceiver

Once the unit has been configured, it is ready for use. If other vessels with AIS transceivers installed are within radio range of your vessel, you should see their details appear on your chartplotter or PC. These vessels will also be able to see your vessel on their chartplotter or PC. It may take up to six minutes for your full vessel details to be visible to others.

Specific details of how to configure your chartplotter to make use of the AIS transceiver features will be provided in your chartplotter manual. If you are using charting software running on a PC, please refer to the instructions provided with your chart plotting software to configure it and display AIS information.

5.2 Switch functions

When connected to the AIS transceiver following the instructions in section 3.2, an external switch provides the ability to set the AIS transceiver into 'silent mode'. In silent mode the transmission of your own vessel position ceases, whilst the reception of other vessel's AIS position continues. You should use silent mode if you do not wish your vessel data to be received by other AIS devices. When silent mode is active, the blue indicator will be illuminated.

When silent mode is active, other vessels will not be able to receive your vessel information on their AIS devices. Your navigational safety may be compromised as a result.

5.3 Using proAIS2 with your AIS transceiver

The proAIS2 tool has a range of features to help monitor the performance of your AIS transceiver. To use the full range of features, your AIS transceiver must be installed as described in section 3, and

connected to a PC running the proAIS2 application. Follow the instructions provided in the help menu within proAIS2.

5.4 Indicator functions

The AIS transceiver includes four colored indicators as shown in Figure 15. The state of the indicators provides information regarding the status of the AIS transceiver.

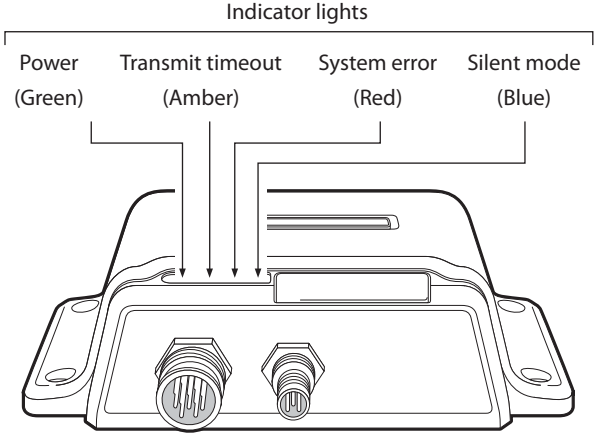

Figure 15 Indicator location on the AIS transceiver unit

The meaning of typical indicator configurations is shown in the table below, and Figure 15 shows the orientation of the AIS transceiver.

	Green indicator only The AIS transceiver is powered up, has a position fix, and has transmitted at least one vessel information report.
	Red indicator only The AIS transceiver has detected a system error. The likely causes are detailed in the troubleshooting guide in section 6. Diagnostic messages displayed in proAIS2 may also help troubleshoot the cause of the error.
	Amber and blue indicators When silent mode is activated using the optional silent mode switch, this combination of indicators is illuminated to show that the transmitter is disabled.
	Amber indicator only The AIS transceiver is in 'transmit time-out' mode. This can be for a number of reasons: · The unit has only recently been powered on and is obtaining a position fix prior to transmitting its first vessel information report. (This process can take several minutes.) · Position fix has been lost. The AIS transceiver will attempt to regain a position fix for 30 minutes before entering an error state. · The AIS radio channels are exceptionally busy so there is currently no available time slot for transmission. · The unit has been in silent mode and, after deactivating silent mode, this amber indicator will illuminate until the first AIS message has been sent · The AIS transceiver has been commanded by the local authority (via an AIS base station) to cease transmissions.

6 Troubleshooting

Issue	Possible cause and remedy
No data is being received by the chartplotter	· Check that the power supply is connected correctly. · Check that the power supply is a 12V or 24V supply. · Check that the connections to the chartplotter are correct.
No indicators are illuminated	· Check that the power supply is connected correctly. · Check that the power supply is a 12V or 24V supply.

The Red 'error' indicator is illuminated	· The unit may not have a valid MMSI. Check that the AIS transceiver is correctly configured with a valid MMSI. · The VHF antenna may be faulty. Check the connection to the VHF antenna and confirm that the VHF antenna is not damaged. The red indicator may illuminate briefly if the power supply is interrupted or the VHF antenna characteristics are briefly affected. · No GPS position fix can be obtained. Confirm the transceiver is located where the internal GPS antenna has a clear sky view or that an external GPS antenna is properly connected and installed. Review the GPS signal strength graph available in proAIS2. · The power supply is outside the allowable range. Check that the power supply is within the range 9.6V to 31.2V. · If none of the above correct the error condition, contact Humminbird Customer Service for advice. · Check for error and alarm messages in proAIS2
My MMSI is being received by other vessels, but my vessel name is not shown on their chartplotter or PC	· Some older AIS devices and chartplotters do not process the specific class B AIS message, which provides the vessel name (message 24). This is not a fault of your AIS transceiver. Software upgrades are available for many older chartplotters which will correct this issue. The other vessel should update its AIS unit and/or chart plotting software to receive AIS message 24.

If the guidance given in the table above does not correct the problem you are experiencing, please contact Humminbird Customer Service for further assistance.

7 Specifications

Parameter	Value
Dimensions	175 x 100 x 48 mm (L x W x H)
Weight	250g
Power	DC (9.6V - 31.2V)
	Average power consumption 170mA at 12VDC
	Peak current rating 2A
GPS Receiver (AIS Internal)	50 channel IEC 61108-1 compliant
Electrical Interfaces	USB
	NMEA 0183 38,400kBaud output
	NMEA 0183 4,800kBaud input
	NMEA 2000 LEN=1
Connectors	VHF antenna connector (SO-239)
	External GPS antenna connector (TNC)
	USB type mini B connector
	NMEA 2000 standard connector
	12 way power input/NMEA 0183/External switch

VHF Transceiver	Transmitter x 1
	Receiver x 2 (One receiver time shared between AIS and DSC)
	Frequency: 156.025 to 162.025 MHz in 25 kHz steps
Output Power	33dBm ± 1.5 dB
Channel Bandwidth	25kHz
Channel Step	25kHz
Modulation Modes	25kHz GMSK (AIS, TX and RX)
	25kHz AFSK (DSC, RX only)
Bit rate	9600 b/s ± 50 ppm (GMSK)
	1200 b/s ± 30 ppm (FSK)
RX Sensitivity	Less than -107dBm at 20% PER
	Co-channel 10dB
	Adjacent channel 70dB
	IMD 65dB
	Blocking 84dB
Environmental	Water resistant to IPx6
	Operating temperature: -15°C to +55°C
	Tested to IEC 60945 'Protected' category
Indicators	Power, TX time-out, error, silent mode status

Product specifications and features are subject to change without notice.

Power supply information for this product can be found on the ratings label which is fitted on the bottom case of the Humminbird Class B Transceiver.

Contact Humminbird

Contact Humminbird Customer Service in any of the following ways:

Web site:
humminbird.com

E-mail:
service@humminbird.com

Telephone:
1-800-633-1468

Direct Shipping:
Humminbird
Service Department
678 Humminbird Lane
Eufaula, AL 36027 USA

Hours of Operation:
Monday - Friday
8:00 a.m. to 4:30 p.m. [Central Standard Time]

HUMMINBIRD®

201-0422:2