UP BOX

version： 4.6.23

Table of Contents

Precautions ····· 01

Printer Body illustration ····· 03

Accessories ····· 04

Remove Shipping Clips ····· 05

Install UP software ····· 06

Initialization of Printer ····· 07

Platform Calibrate: 08

1.Setting Nozzle Height ····· 09

2.Setting Compensation Values ····· 10

Coarse manul platform leveling ····· 12

Print A Model ····· 14

Software Interface ····· 15

Pause of Print Job ····· 16

Moving Model ····· 17

Rotate Model ····· 18

Duplicate Model ····· 19

Printing Parameters ····· 20

Annotation of Printing Parameters ····· 21

Repair Model ····· 22

Calibration for the Correct Dimension ····· 23

Printing Techniques ····· 24

Troubleshooting ····· 25

Appendix A ····· 26

Precautions

1. UP BOX 3D printer requires power adapter provided by original manufacturer. Otherwise machine could be damaged or even cause fire hardzard. Please also keep the power adapter away from water and high temperature.

2. During printing, the nozzle of the printer will reach 260°C and the print platform could reach 100°C. Please do not touch these parts with bare hand while they are hot, not even with the heat resistant gloves included with machine as the temperature could damage the gloves and your hand.

Warning label on printer:
High Temperature, do not touch!

4. During Printing, the nozzle and print platform will move at high speed, do not touch these parts while they are moving.

Warning label on printer:
Moving parts, do not touch!

5. Please wear goggles when removing the supporting material from models and detaching models from perf board.

6. When printing ABS and PLA, slight smell will be produced, please run the printer in a well ventilated environment. We also suggest you put the printer in an enviroment with stable temperature, as unwanted cooling could cause adverse effects on print quality.

7. When UP softwre is sending data to the printer, where the status bar on the left bottom corner is showing "sending layers", do not unplug USB cable as this will disrupt data transfer and resulted in printing failure. USB cable can be unpluged after data transfer was finished.

8. UP BOX's working temperature is between15°C and 30°C relative humidity 20%-50%. It is recommended to discharge static charge from user's body before touching the machine to prevent interruption of printing and potential damage to the printer.

UP BOX Specification

Printing Technology	MEM (Melted Extrusion Manufacturing)
Build Volume	255 x 205 x 205mm (W x H x D) 10" x 8" x 8"
Print Head	Single, Modular for easy replacement.
Z-Resloution	0.1/0.15/0.20 /0.25 /0.30 /0.35 /0.40 mm
Supporting Structure	Smart Support Technology: automactically generated, easy to remove, fine-tunable.
Platform Leveling	Fully automatic leveling with integrated leveling probe.
Print Surface	Heated bed with ABS surface
Unterthered Printing	Yes
Average Operational Noise	51dB
Advanced Features	Door Sensor, Air Filtration, Full-Color LED Bar
Bundled Software	UP Software
Compatible File Formats	STL, UP3, UPP
Connectivity	USB
Operating System	WinXP/Vista/7/8, Mac OS
Power adapter	110-240VAC, 50-60Hz, 220W
Chassis	Plastic case with metal frame, enclosed
Printer Weight	20KG / 44 LB
Printer Dimiension	489 x 495 x 520 mm(WxHxD) 19.5" x 19.5" x 20.5"
Weight with Packaging	
Packaging Dimension	(W x H x D) " x " x "

Printer Body

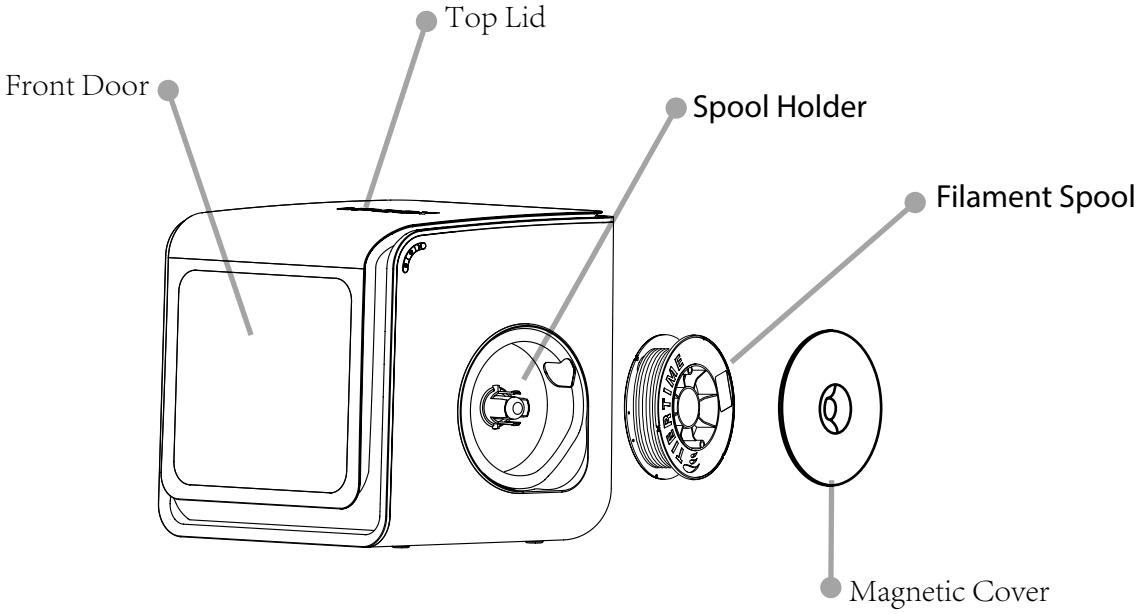

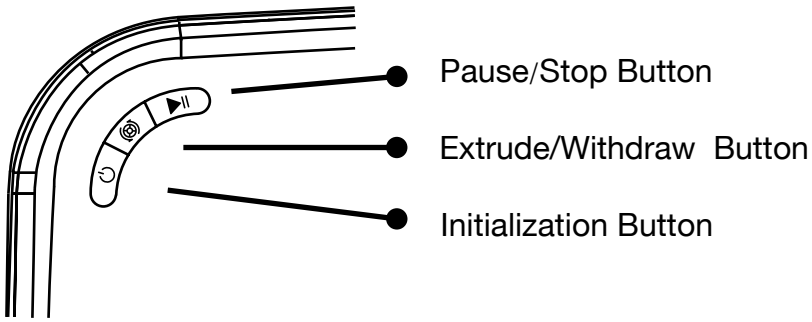

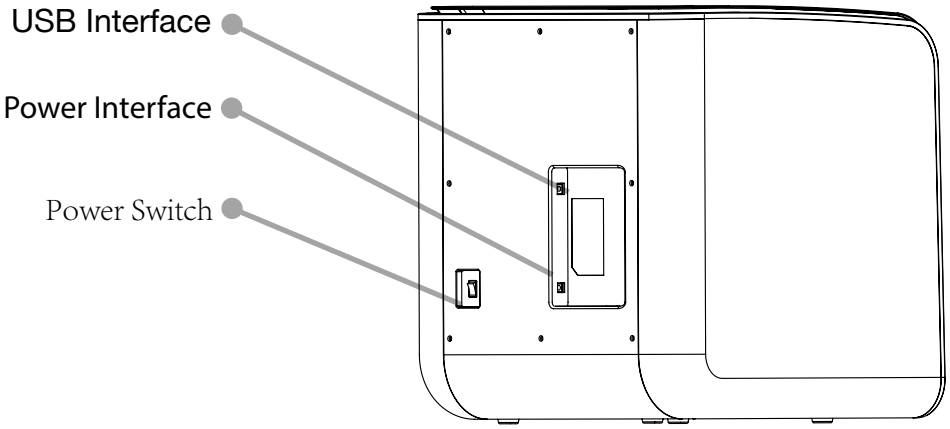

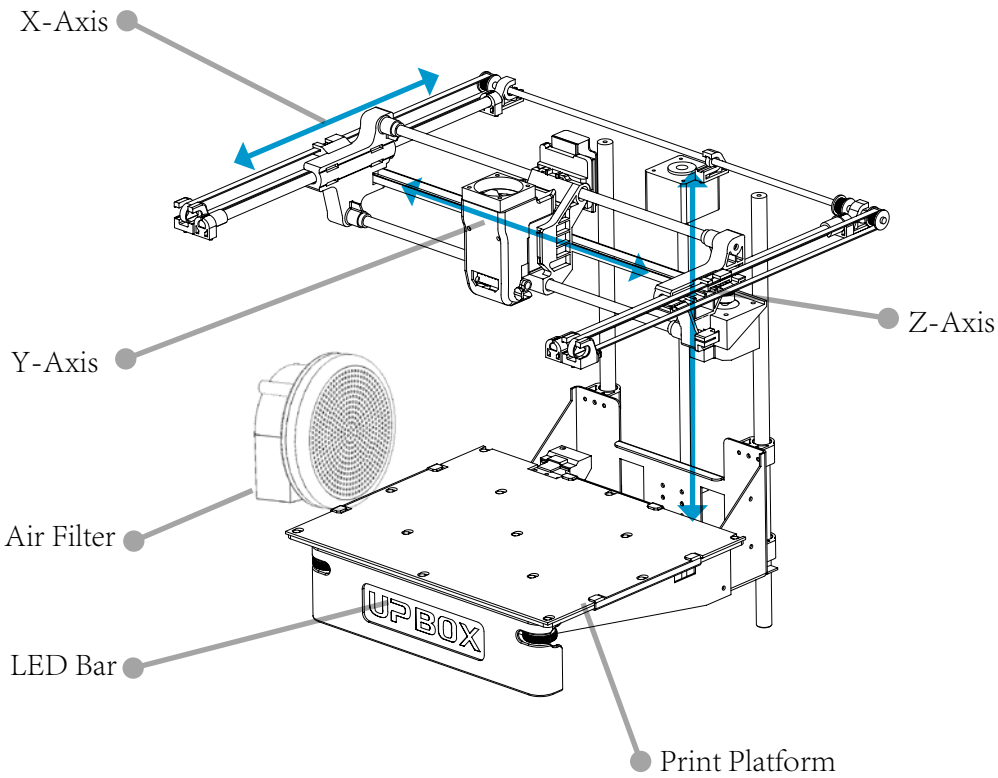

Print Head Mount

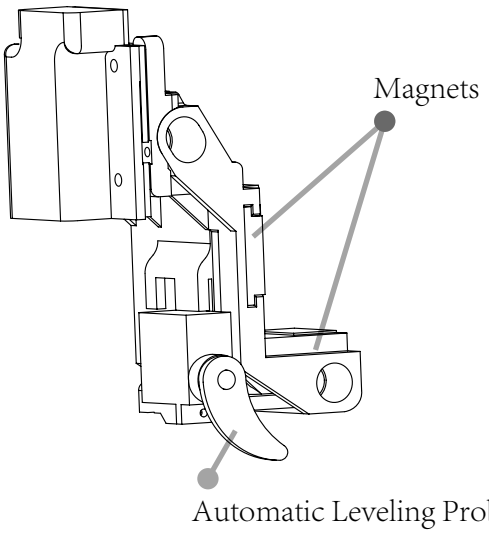

Print Head

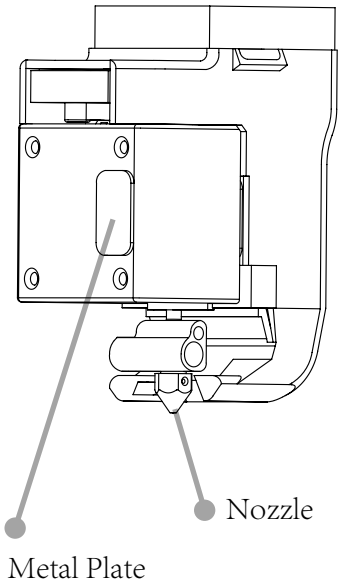

Accessories

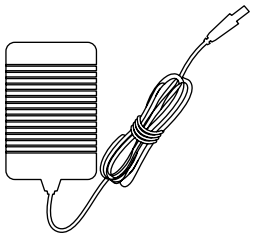

Power Adapter

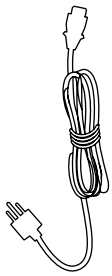

Power Cable

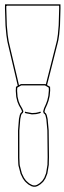

Scraper

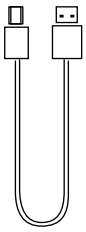

USB Cable

2.5mm Hex Keys

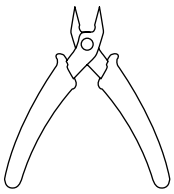

Plier

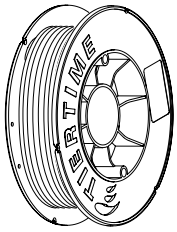

ABS Filament

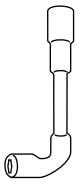

Nozzle Wrench

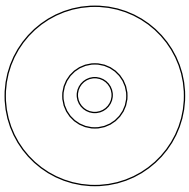

CD-ROM

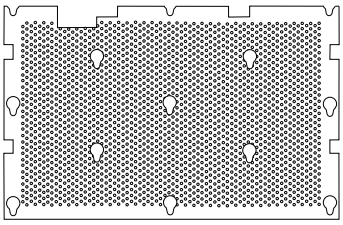

Perf Board

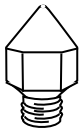

Print Head Nozzle

*If anything is missing please contact your local distributor or support@pp3dp.com

Remove Nylon Ties

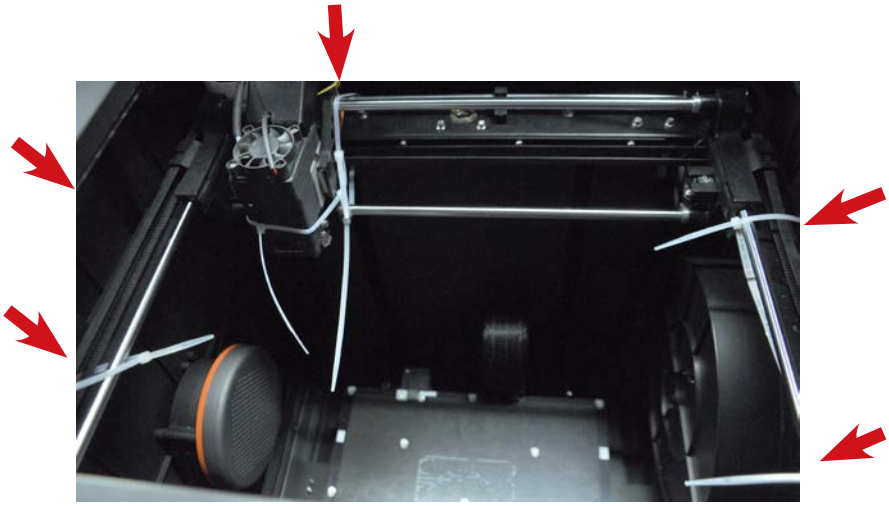

Remove nylon ties from the horizontal smooth rods.

Install Perf Board

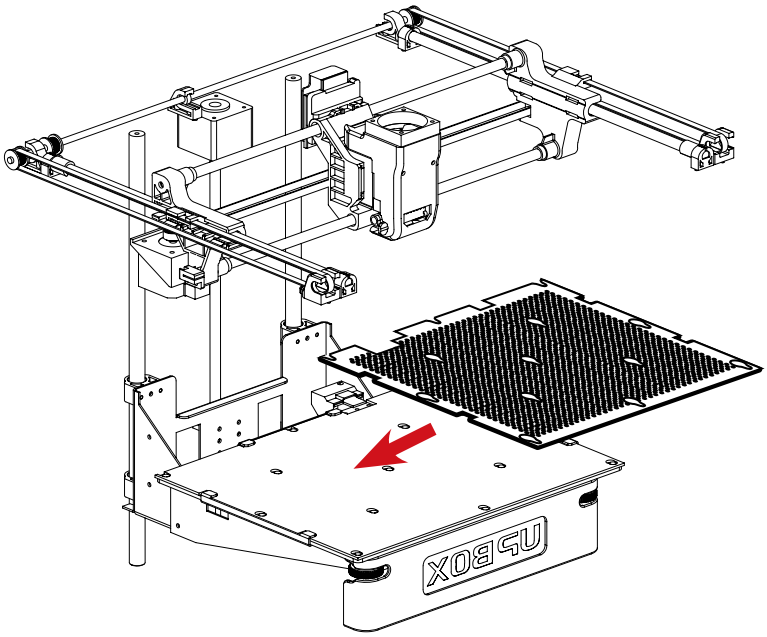

Install Filament

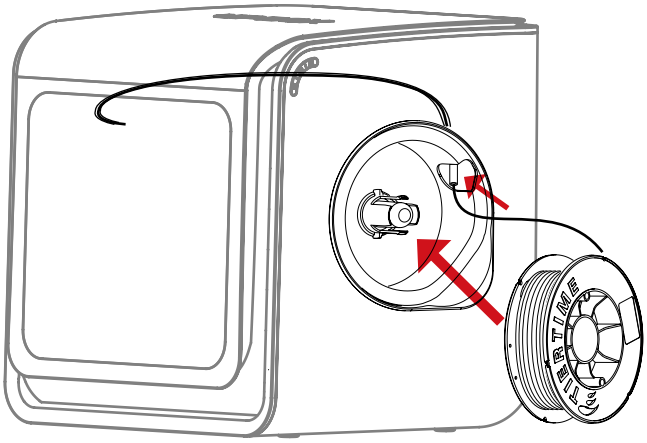

To install the filament spool, open the magnetic cover and insert the filament into the guiding tube at the spool holder.

Push filament into the guiding tube until it come out from the other end, put the spool onto the cassette and cover the spool with the magnetic cover.

Install UP software

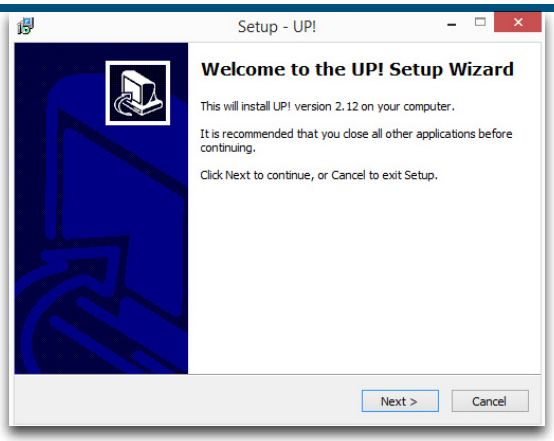

1.Go to support section of www.pp3dp.com to download the latest version of UP Software.
2.Double click UP! Setup.exe to install the software (default installation path C:\Program files\UP) a pop up window will appear, select"install" and following the instruction to finish. The printer's driver is now installed into the system.

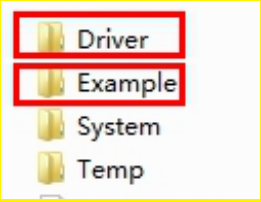

After installation,in the UP folder:
Driver folder contains the printer drivers.
Example the example folder contains STL files for the printed parts of UP printers and example files.

Testing of Printer Driver Installation

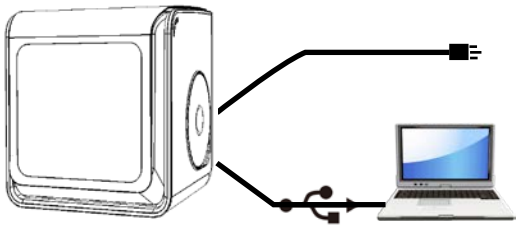

First make sure computer and printer is connected to computer via USB cable and the printer is switched on. The UP BOX LED bar will light up in yellow.

In Software main menu, Click "3D Print".

If "Initialize" and "Maintenance" options light up and avaliable for selection this indicates the successful installation of printer driver.

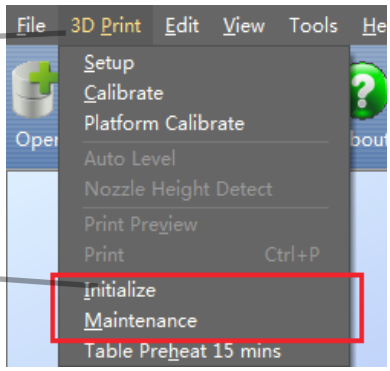

Initialization of printer

Initialization is required for everytime the machine is switched on. During initialization the print head and print platform move slowly and hit the endstops of XYZ axes. This is essential as the printer need to find the endpoints of each axis. Only after initialization, the other software options will light up and become available for use.

Two ways of initialization:

1. UP BOX can be initialized by clicking initialization option in the menu which is shown above.
2. When the printer is idle, long press the initialization button on the printer will also trigger initialization

Initialization Button

The other functions of Initialization Button:

1. Stop current print job: During printing press and hold the button.

2. Reprint last job: Double click of the button.

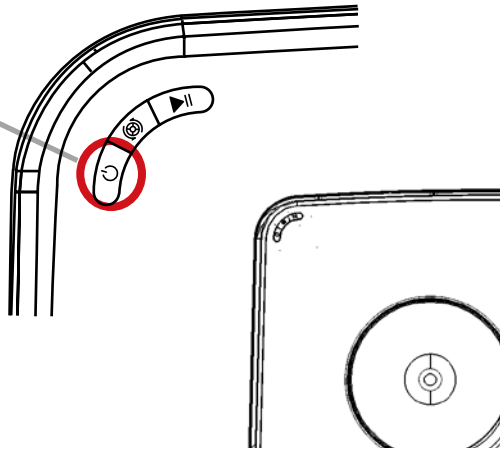

Automatic Platform Calibration

Platform calibration is the most important step for successfull printing, as it ensures the first layer adhesion. Ideally, the distance between nozzle and platform is constant, but in reality the distance varies at different positions due to many reasons (eg. slightly tilted platform) and this could cause warping of prints or even complete failure. Fortunately UP BOX has automatic platform calibration and automatic nozzle height detection functions. By using these 2 functions, the calibration process could be finished quickly and easily.

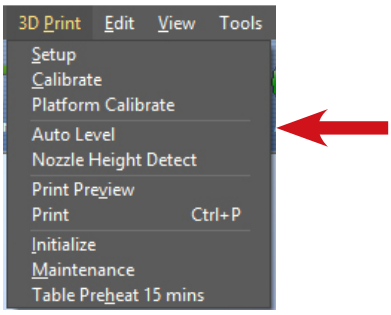

In 3D Print menu, select Auto Level to initiate auto leveling. The leveling probe will be lowered and start to probe 9 positions on the platform. After probing the platform, the leveling data will be updated and stored in the machine, leveling probe retracts automatically.

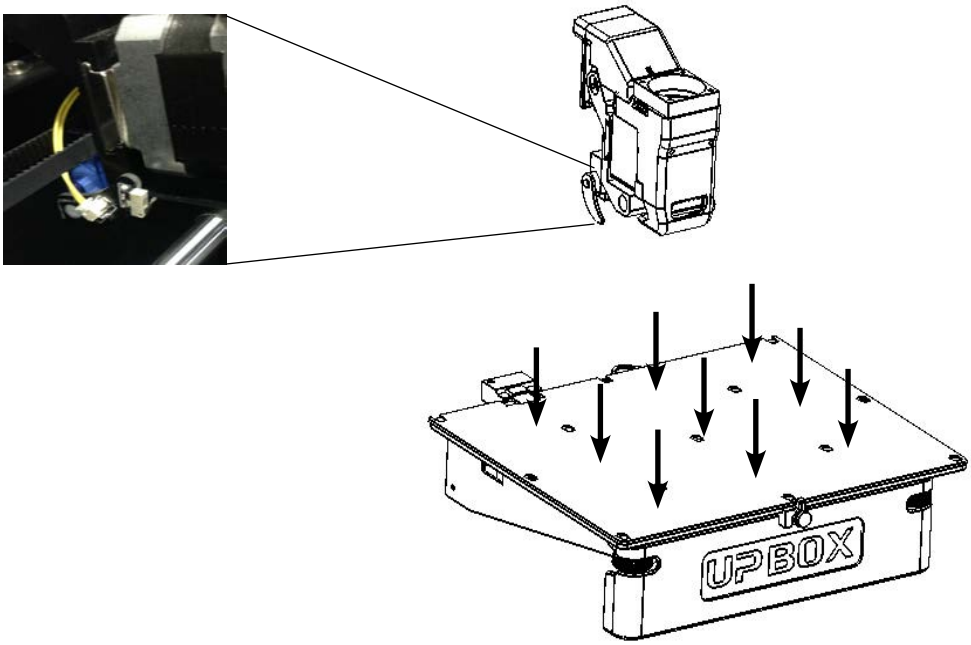

Calibation Tips:
1. Do the calibrations when nozzle is not heated.
2. Remove residual plastic on the nozzle before calibration
3..A perf board should be fitted on platform during calibration.

Automatic Nozzle Height Detection

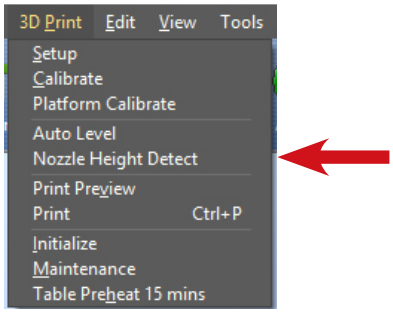

Choose "Nozzle Height Detect" in 3D Print menu. The print head will move toward the nozzle height detection device and the nozzle will eventually touch and press the metal part on the device to make the meausrement.

The detected nozzle height value wlll be stored in the in the machine.

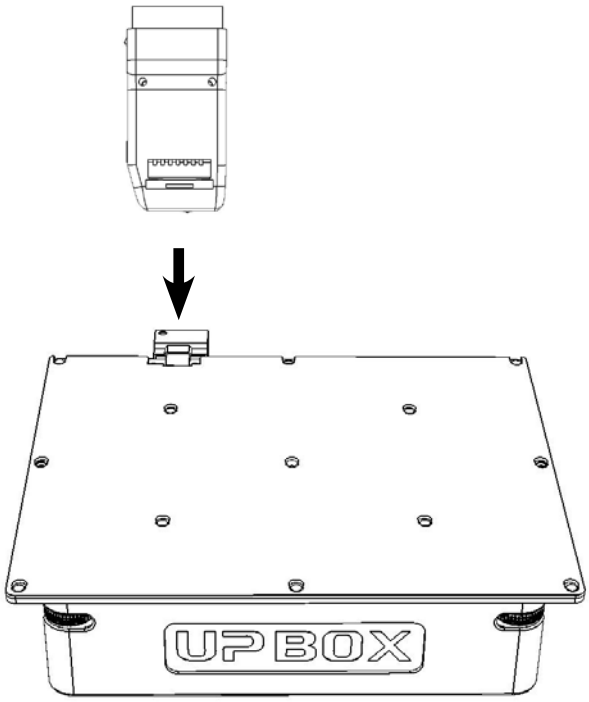

If consistent warping still occurs after auto-leveling, this may due to severe unleveling of the platform which exceed the capability of auto-leveling fucntion. In this case user should do a coarse manual leveling before auto-leveling (see next page).

User may also level the platform without using the auto-leveling device and nozzle detection device. Please refer Appendix A for details.

Coarse Manual Platform Leveling

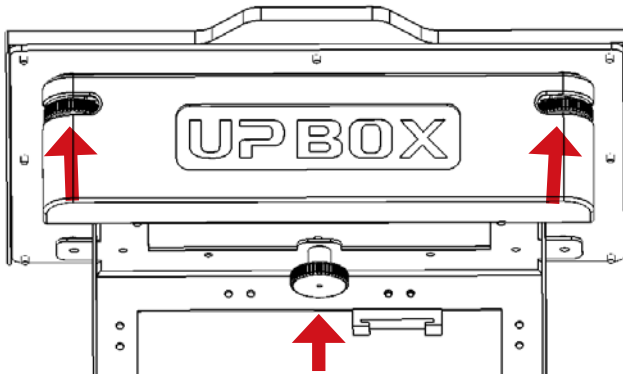

Usually you do not need to adjust the platform manually. This is only necessary if automatic leveling were unable to effectively level the platform.
There are 3 screws under the platform of UP BOX. Two screws in front and one screw under the platform at the back. These screws can be fastened or loosened to adjust the leveling of the platform.

In "3D Print" - "Maintainance" window, user can move the print head to 5 difference postions on the platform. User can also use "To" button to move the print platform to a particular height.

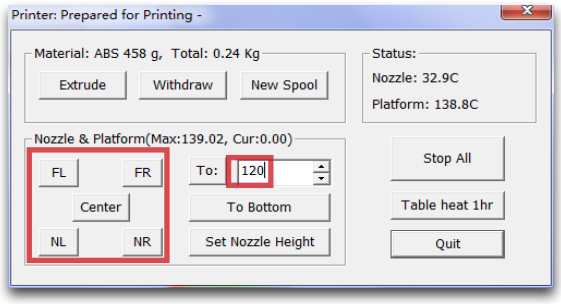

First move print head to the center of the platform and move the platform to almost touching the nozzle (eg. nozzle height). Use a piece of paper to determine the correct platform height

Try to move the paper and feel the drag. When one can feel the resistance from the nozzle, base on the right side diagram. Make sure you can feel similar drags at all 5 positions by moving the print and adjusting the screws while the platform height is fixed.

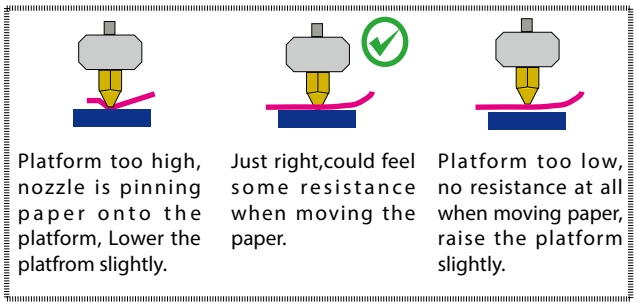

Other Options of the Maintenance Menu:
Withdraw: *the printer heat up and withdraw filament from the print head.*
New Spool: *to tell the software what is the current filament type, the filament that used must match here.*
Heat Table 1 hr: *preheat table for 1 hour.*
To Bottom: *move the platform to the bottom.*
Set Nozzle Height: *set the current platform height as nozzle height.*

Prepare for Printing

1 Make sure printer switched on and connected to computer. Select Main Menu - 3D Print - Maintainance.

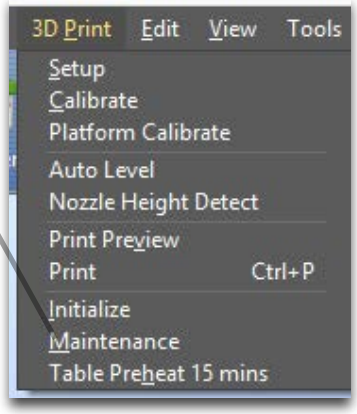

2 Click New Spool and choose ABS and input filament weight.

3 Click "Extrude" button, the print head will start to heat up, within 5 minutes its temperature will reach 260°C, then printer will buzz and the print head start to extrude.

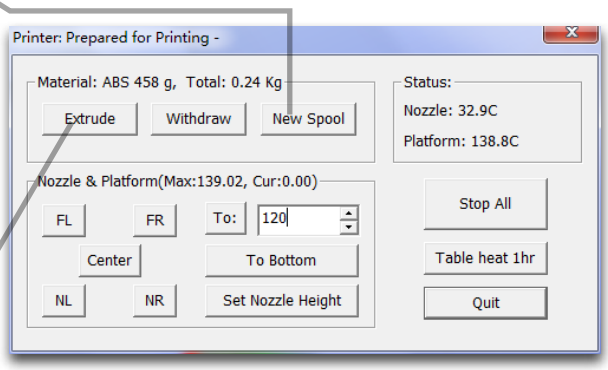

4 Gently insert the fliament into the small hole on the print head. The filament will be feed into the print head automatically when it reach the extruder gear inside the print head.

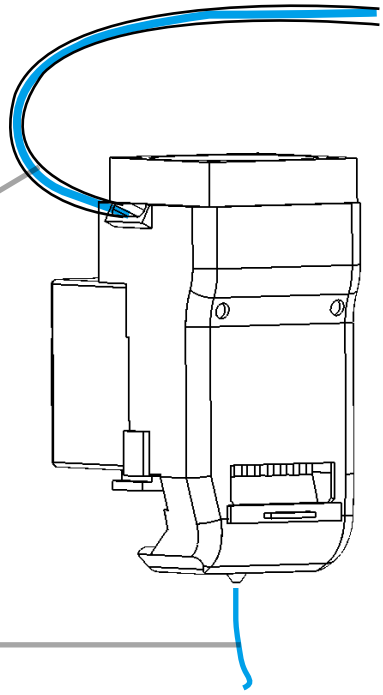

5 Check the nozzle for plastic extrusion. If plastic is coming out from the nozzle that means filament loading correctly and ready for printing.
(The extrusion will stop automatically.)

Printer Control Buttons

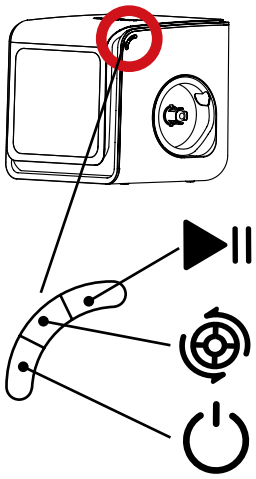

Long Press	Double Click	Single Click
●—	●●	●
Stop Printing	Pause/Resume Printing	Single click any button will switch on the internal lighting for 3 minutes
Extrude Filament	Withdraw Filament	
Initialize Printer	Reprint last job	

LED Light Bar

Different color and behavoiur of the "UP BOX" light bar indicate different status of printer.

UP BOX	Breathing: Printer switched on, uninitialized.
UP BOX	Breathing: Printer initialized, ready for printing.
UP BOX	Single Letter Rotation: Data transfer and printing in progress. Breathing: Paused.
UP BOX	Error. If a single letter is always on, it may represent following errors: U: Print Head Error P: Motion System Error B: Print Head Temp. Error O: Build Platform/Chamber Temp. Error X: SD Card Error

Software Interface

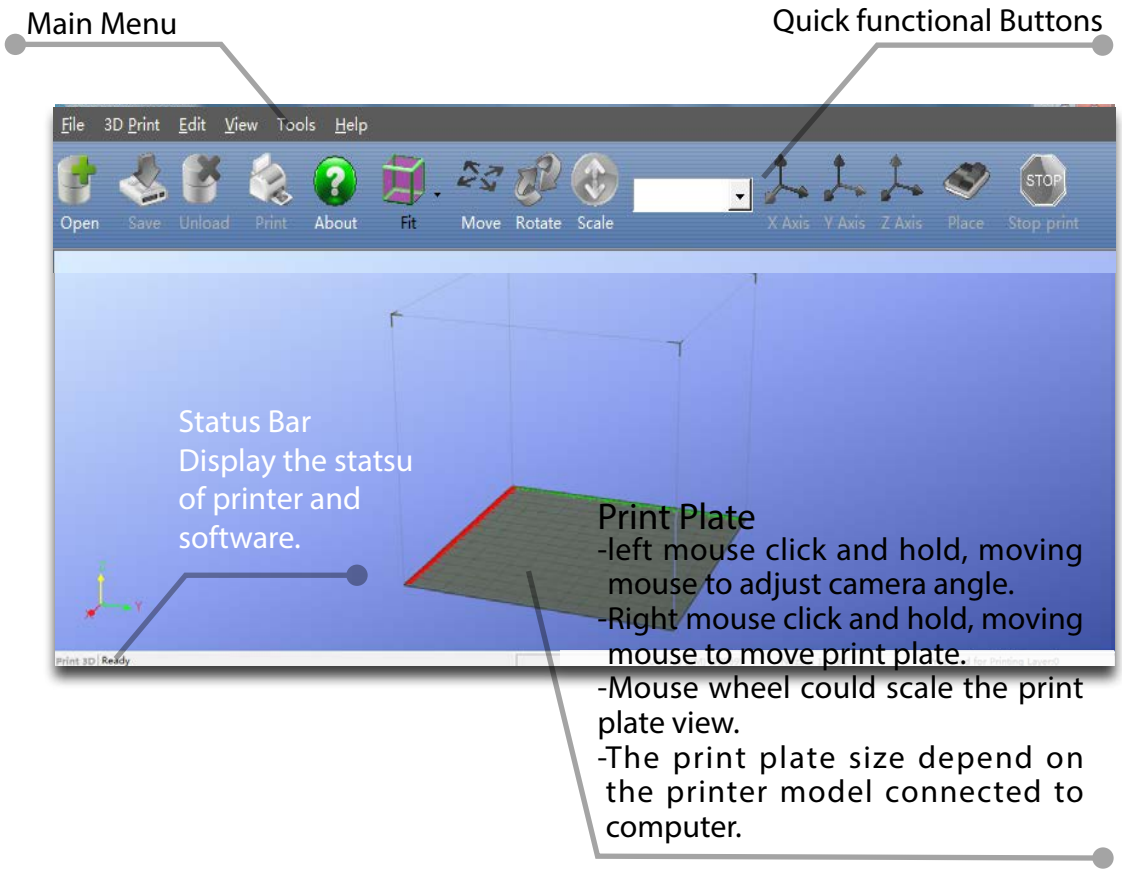

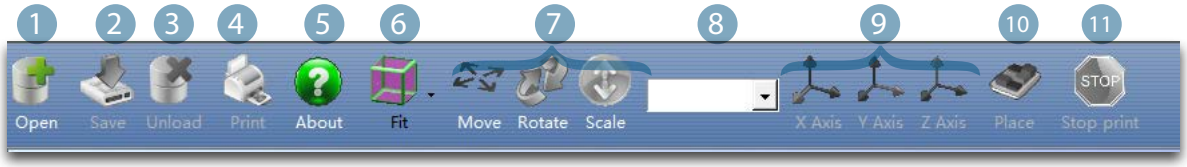

1. Open: Load a model.
2. Save : Save the model into .UP3, a propritory 3D file format for UP printers.
3. Unload: Unload the selected model.
4. Print : Print the current print plate.
5. About : Display software version, printer model, firmware version and etc.
6. View Perspective: A variety of pre-set of perspective.
7. Adjustments : Move, Rotate, Scale.
8. Set the value of adjustments.
9. Set the orientation of adjustments.
10. Place : Place the model to the center of the print plate. If more than one model exist software will optimize their positions and distances to each other.
11. Stop: If connected to printer, click this will stop the printing process. (cannot be resumed)

Loading a Model

1 Click "Open"

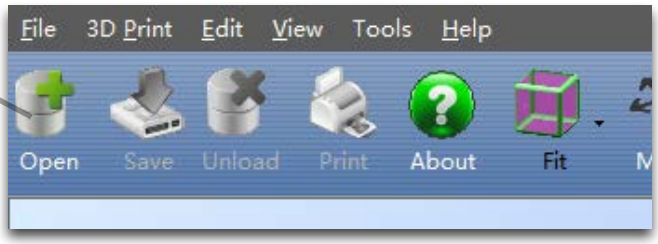

2 Choose your model.

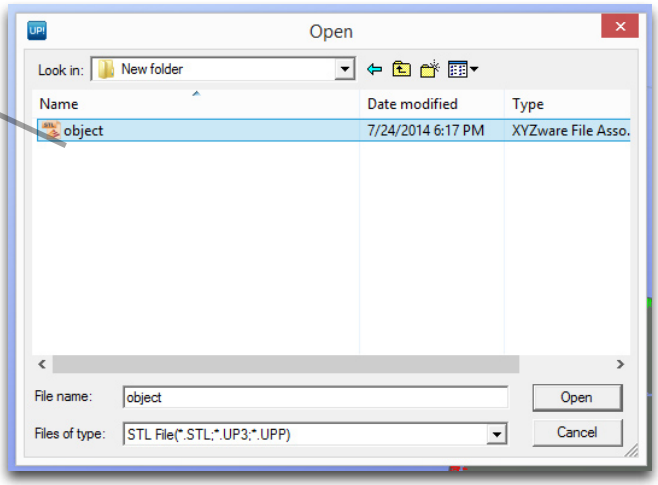

3 Loaded model on the print plate.

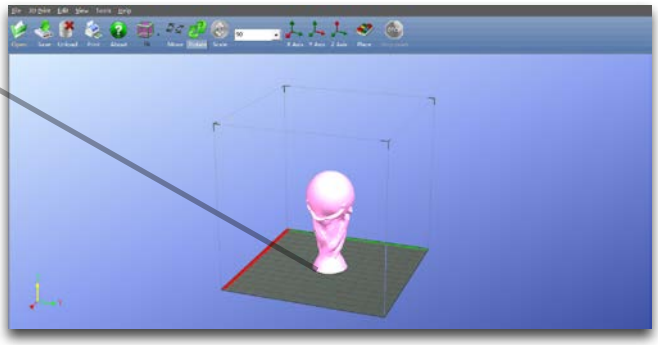

4 Click "Print" to open the print preview window.

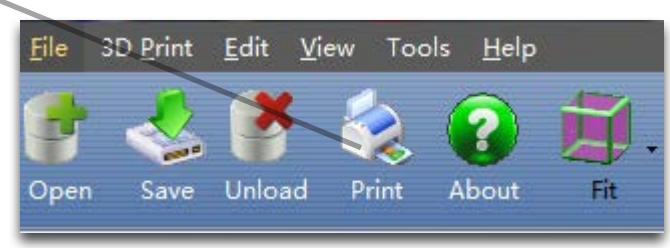

Click "OK" to start printing.
The program will process the model and then transfer the data to the printer.

5

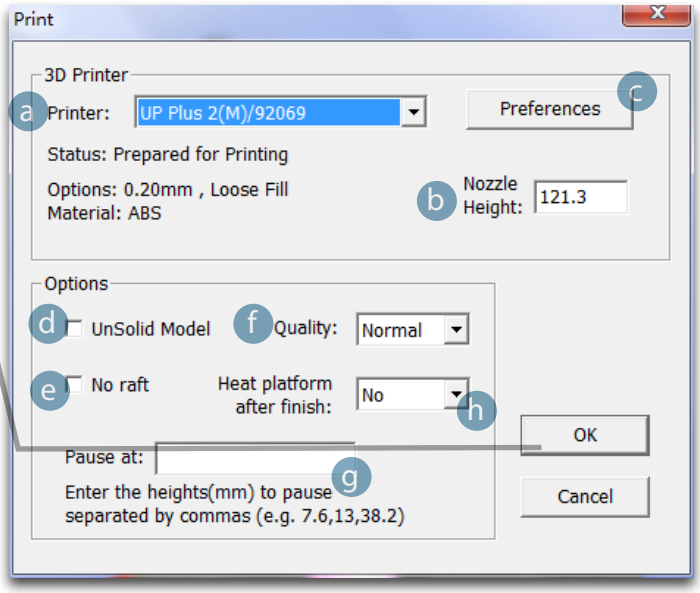

After sending the data, the program will suggest the amount of material and time needed for the model in a pop up window.
At the same time, the nozzle will start to heat up. The print job will start automatically.

6

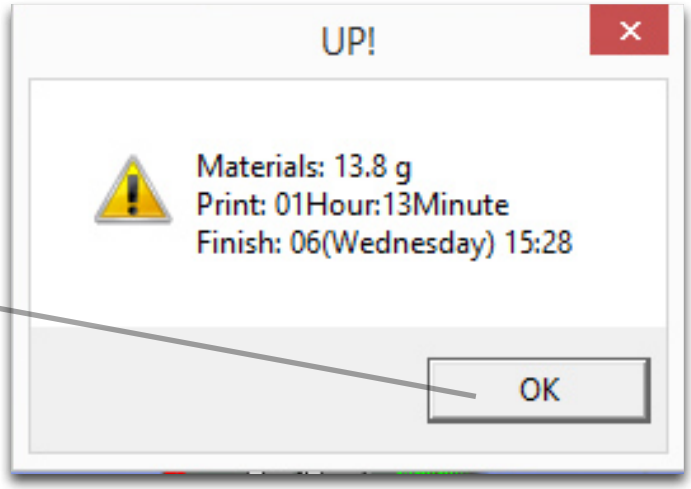

Annotation of Print Preview Interface:

a. Display the printer model.
b. Dispaly the noozle height.
c. Click to enter printer preference to set printing parameters.
d. If your model is not solid (defective), turn on this option.
e. No raft will be printed if this is turned on, print bed leveling will be disabled as well.
f. Print Quality: the better the print quality the slower the print speed.
g. Set the pause height, the printer will pause at indicated heightness for changing filaments.
h. Continuous heating of platform after printing, save heating time for consective printing and preventing breakage due to rapid cooling in cold weather.

When printer finished receiving the data, user could disconnect it from computer for untethered printing.

Printing Progress

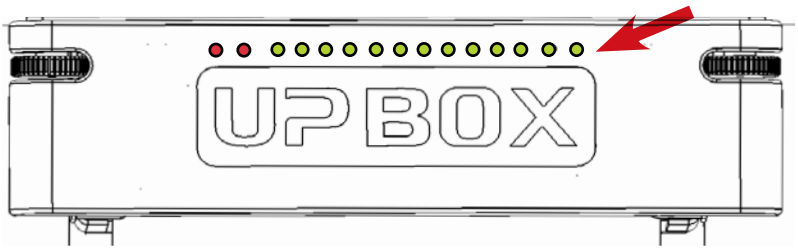

Printing progress is shown in the LED progress bar on top of the UP BOX letters. The first two red LED represent printing of raft, the others represent the rest of the model.

Pause of Print Job

During printing, the machine could be paused through maintainence interface.

When the printer is idle, there is a **"Table heat 1 hr"** button under "Stop All" button. Press this button will keep platform heated for one hour.

When the printer starts to print, "Table heat 1 hr" button will disappear. The button will reappear after the printing of **raft is finished** but the button becomes **"Pause Print"** which indicates pause function is now available. Press this button the printer will pause the print job and the button will become **"Resume Print"** for resuming the print job**.**

When the print job is paused, the other buttons on the maintence interface will become available. User could change filaments using "Withdraw" and "Extrude" buttons or move the print head and print platform with the location buttons and the "To" button. User should be aware not to crash the print into the print head.

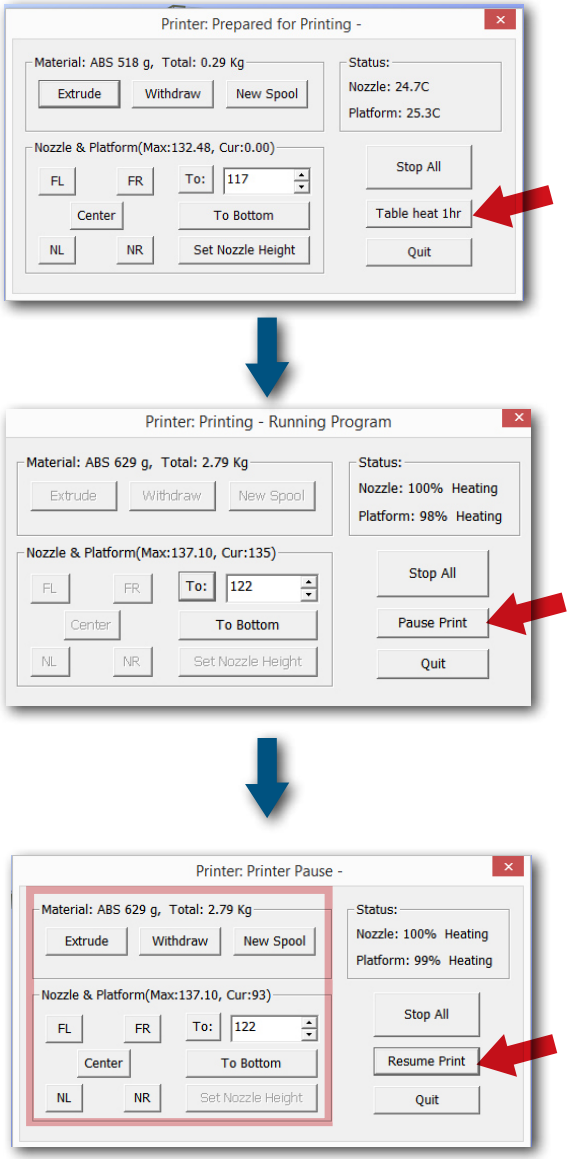

Pause of Print Job without using Software

During printing when the front door is opened, printing will be paused automatically. After closing the front door the print job will not be resumed until the user double click the pause button.

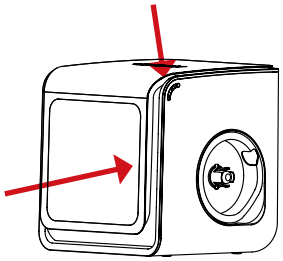

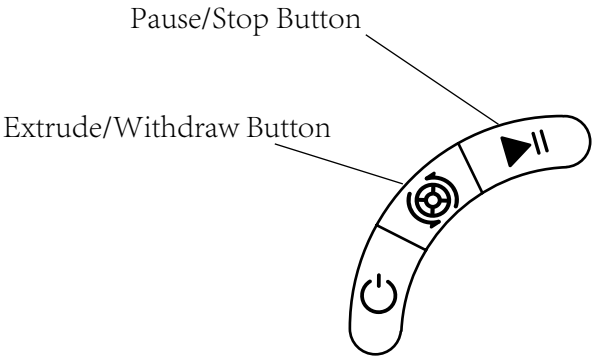

Alternatively, during Printing, double click the Pause/Stop button, the print job will be paused. It is possible to use the Extrude/Withdraw button to change filament during pausing. Double click the pause/stop button again to resume the print job.

Moving Model

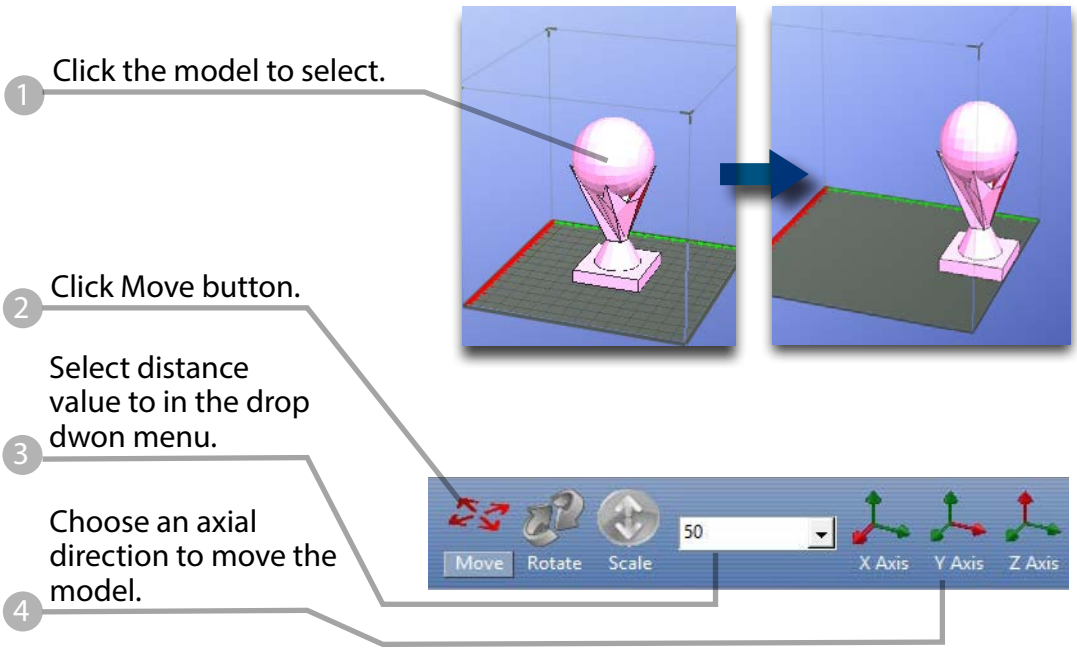

Drag model with mouse on XY-plane: ***Press and hold Ctrl key****, mouse* ***left click and hold*** *the target model, now the model could be dragged around on XY-plane.*

Drag model with mouse on Z-axis: ***Press and hold Shift key, mouse left click and hold the target model****, now the model could be dragged along the Z-axis.*

Multiple models could be ***stacked****. They can also be fused into single model by "Merge" function in the "Edit" Menu.*

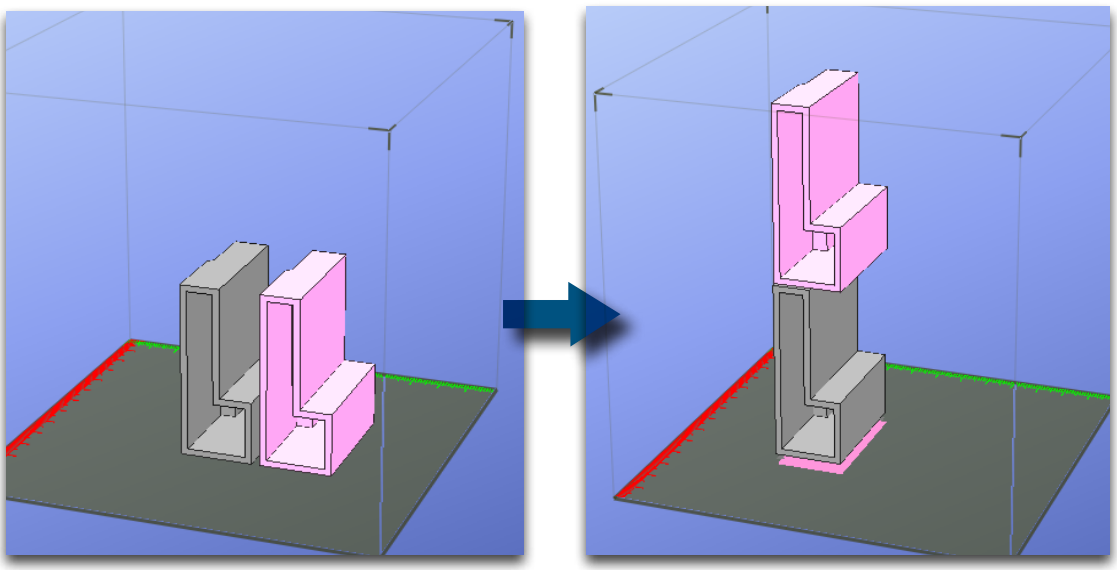

Rotate Model

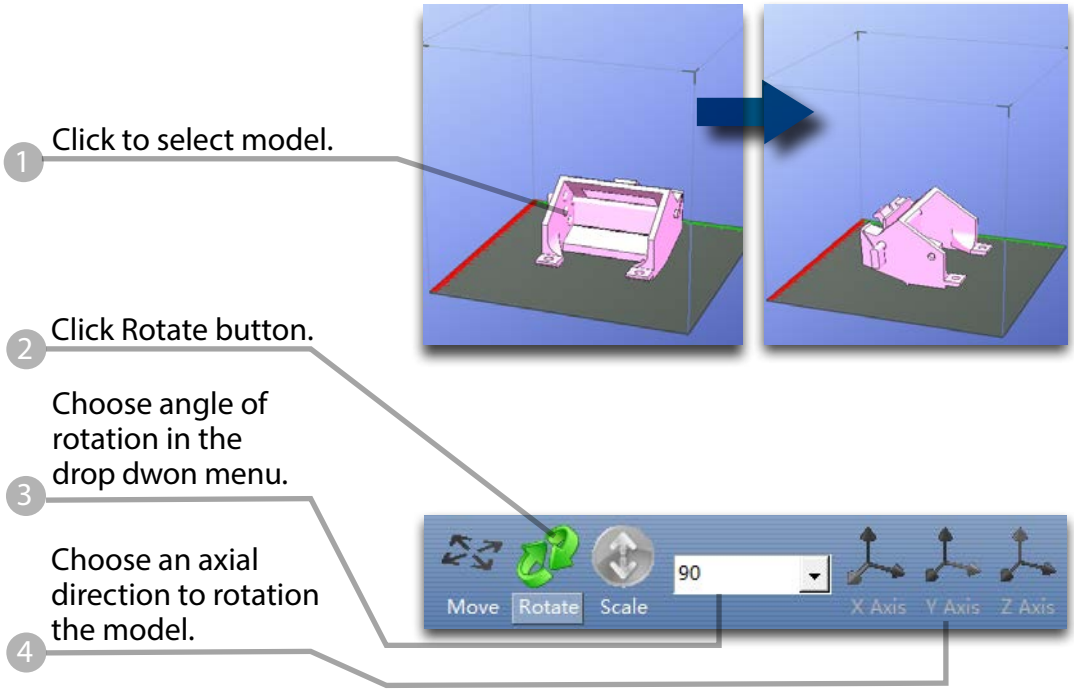

Scale Model

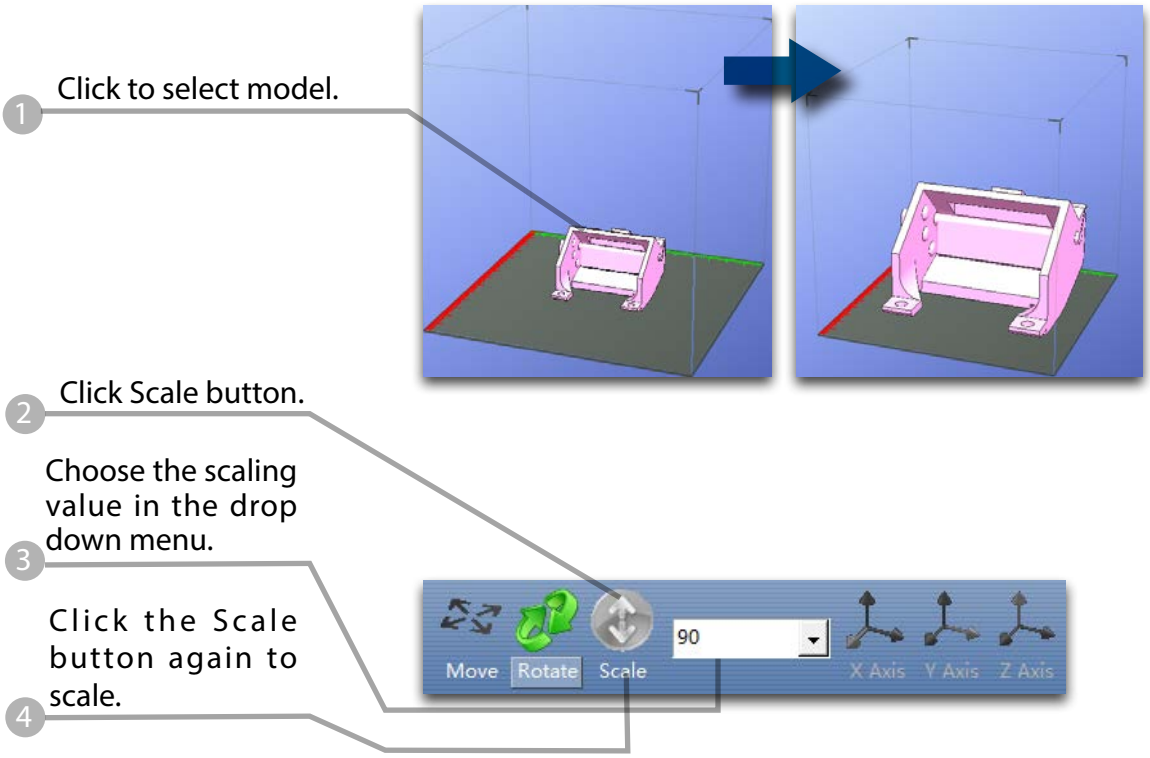

Duplicate Model

1. Click to select model.
2. After selection, right click to open menu
3. In the insert copy menu, select the number of copy for duplication.

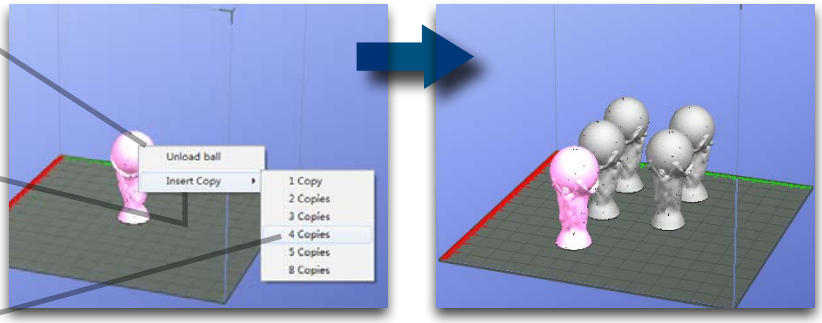

Right click menu also contain unload function. Either choose a specific model to unload or unload all.

Printing Parameters

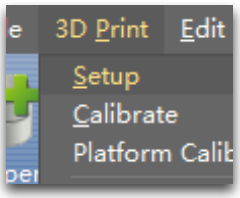

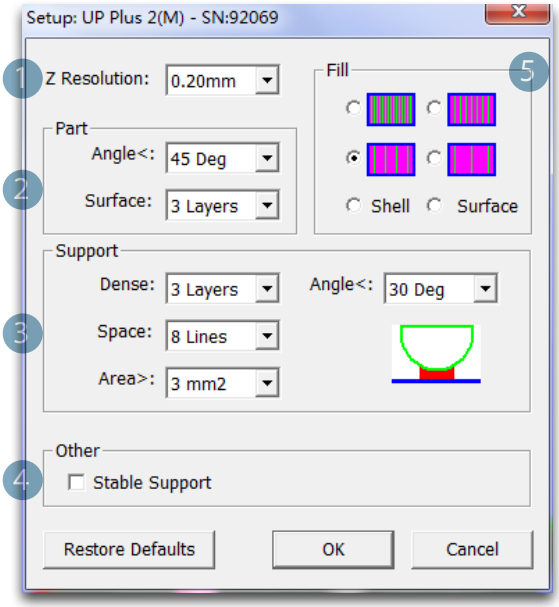

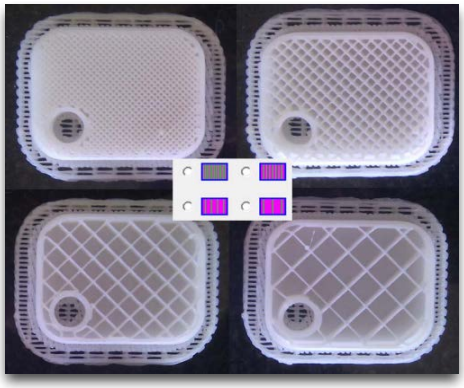

1. Z-resolution: Thickness of each printed layer, the lower the value, the more details will be generated.
2. Part:
   Angle: Determine the range of dense support generation.
   Surface: Choose the how many layers will be made for bottom of the model.
3. Support:
   Dense: How many layers for dense support generations.
   Space: Set the density of of support structure, the larger the value the less dense of the supporting structure.
   Area: If the supporting area is less than this value, no support will be generated.(it is possible to turn off support by choosing Only Base.)
4. Stable Support: Generate more stable support but more difficult to remove.
5. Infill: The photo shows the effects of 4 different infill options.

Shell

No infill in shell mode.

Surface

The object will be printed without bottom layers and top layes. Only a surface with single layer thickness will be made.

Annotation for printing parameters

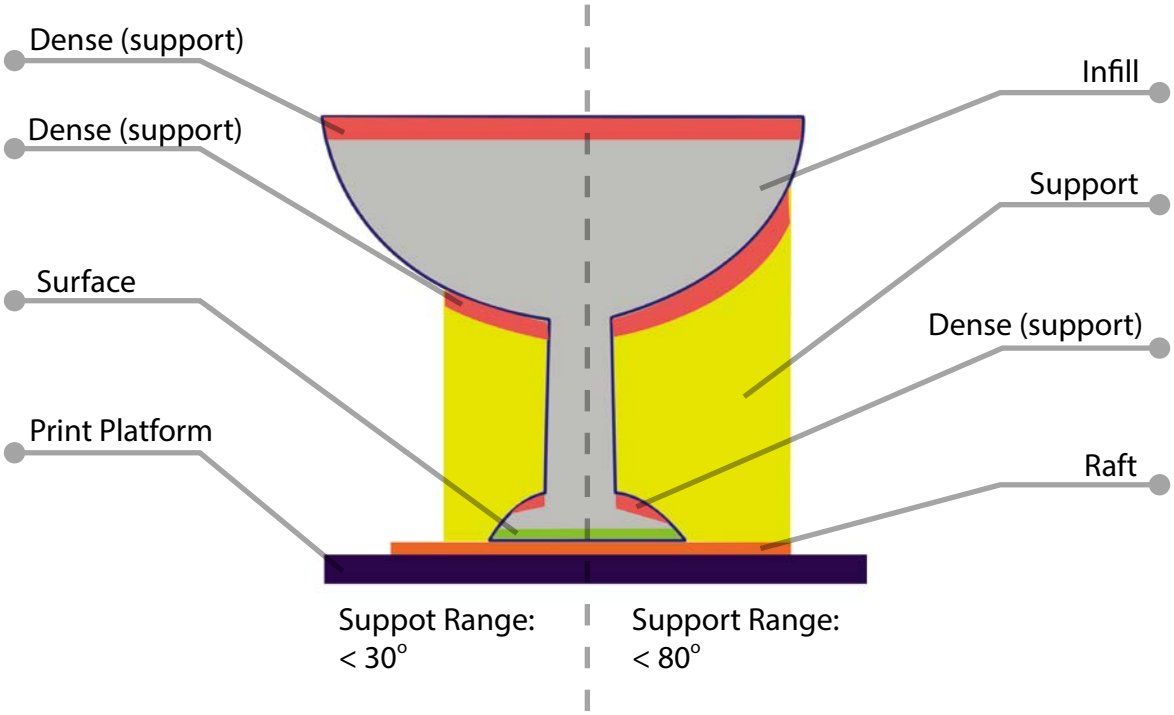

Dense: Solid support structure ensure the surface being supported retain its shape and surface finish.
Infill: The inner structure of the printed object, the density of infill could be adjusted.
Raft: The thick structure that asist the adhesion of object to the platform.
Surface: The buttom layers of the printed object.

Repair Model

UP software contains model repair function, could be used to fix simple defects.

1 If the model contains defective surfaces. The sofware will highlight the part with red.

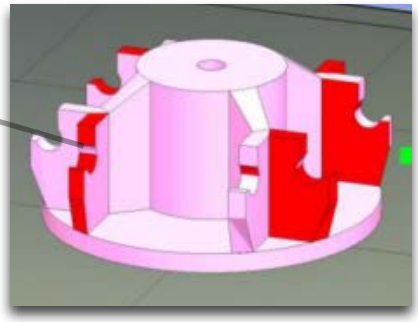

2 After selecting the model, choose Edit - Fix to repair the model.

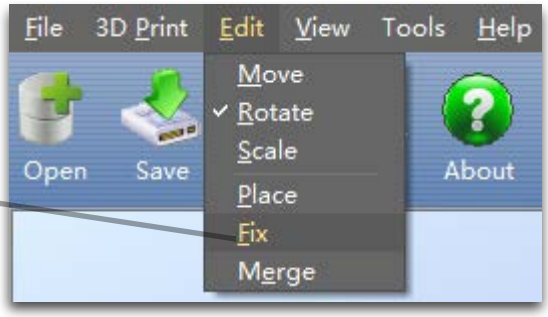

3 Repaired

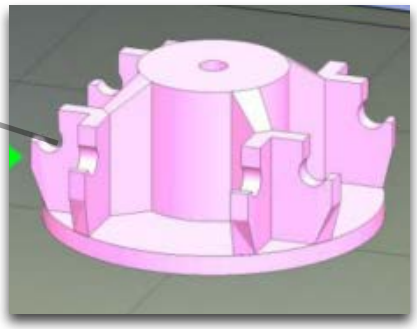

If the model cannot be repaired, please use other 3D modeling or mesh modifying tools.

Calibration for the Correct Dimension

If prints are too big or too small or skewed, user could re-calibrate the printer to print in correct dimension. The method is to print a calibration model, measure its dimension and feedback to the software.

1 Load and print the calibration model: C:\ProgramFiles\UP\Example\Calibrate96.UP3

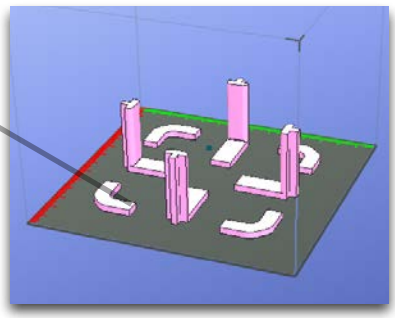

2 Open: 3D Print - Calibrate This will open the calibration panel.

3 Hit "Reset" button to revert the value back to default,make sure the upper panel dispaly: XY:0.00 Deg/XZ:0.00 Deg

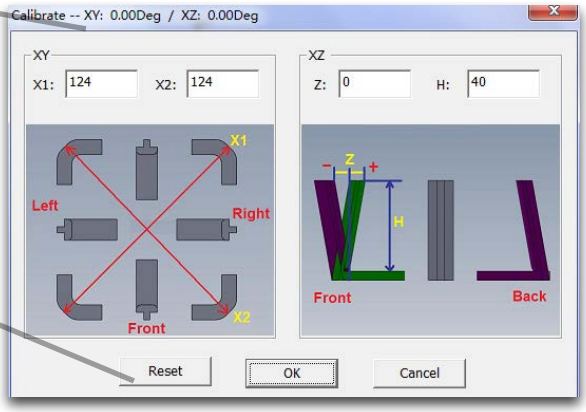

4 Measure the printed model accroding the calibration panel. Input the measured values into the software and finish the calibration.

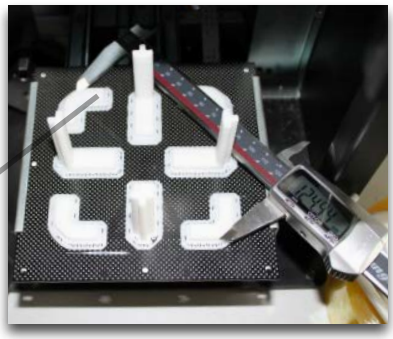

Printing Techniques

1. **Ensure accurate nozzle height.** Nozzle height value too low will cause warping, too high will crash nozzle to platform causing damage and clogging. It is possible to manually fine tune nozzle height value at "maintenance" and "print preview" panels. User could try to adjust the nozzle height value plus or minus 0.1 - 0.2mm base on previous results.

2. **Well calibrate the print platform.** Unleveled platform usually cause warping.

3. **Give enough time for sufficient pre-heating.** Please use the "3D Print" - "Preheat". A well preheated platform is essential for printing large objects without warping.

4. **The air flow direction of the fan on the print head is adjustable.** There is a small lever on the fan duct, when printing PLA turn the lever anti-clockwisely to direct air flow to nozzle, this will cool the PLA as soon as it is extruded and improve print quality. When printing large object using ABS, to minimize warping, turn the lever clockwisely to direct the air away from nozzle to slow down the cooling. For smaller ABS prints that warping is less likely to happen, user could direct the air to nozzle for better print quality.

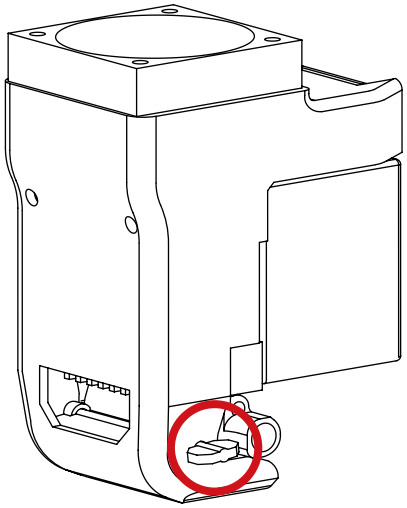

Air Flow Adjustment Knob

5. **No raft printing.** It is highly recommended to use raft for normal printing as it improves adhesion and is required for leveling compensation, therefore it is turned on by default. User could turn it off in the "Print Preview" panel.

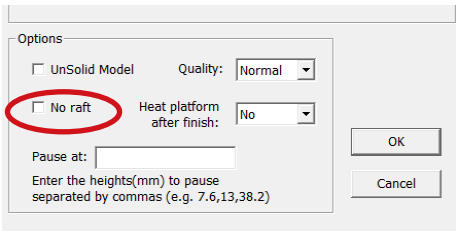

6. **No support printing.** It is possible to print without supporting structures, user can turn off support by choosing "Base Only" in Area drop down menu of printing preference panel.

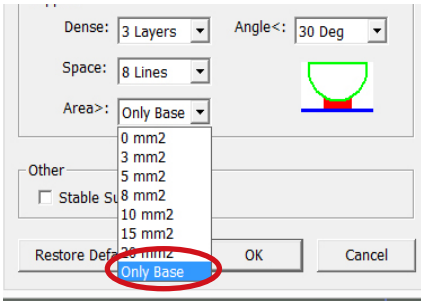

Maintenance

Remove the nozzle.
After a long time of printing, the nozzle could become very dirty or even clogged. We can replace it with a new one while the old one could be cleaned and reused.

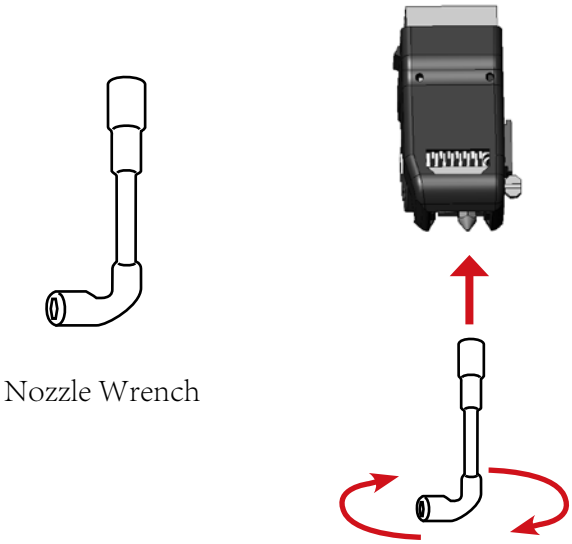

1. Use "Withdraw" function in the maintenance panel, nozzle will heat up to printing temperature.
2. Wear heat resistance gloves provided.
3. Wipe the nozzle with tissue or cotton.
4. Unscrew the nozzle using the wrench provided.
5. Remove the clog: there are many method such as drill through the clog using a 0.4mm drill bit, submerge in acetone or using a heat gun to melt and blow away the clog.

Replace the Air Filter

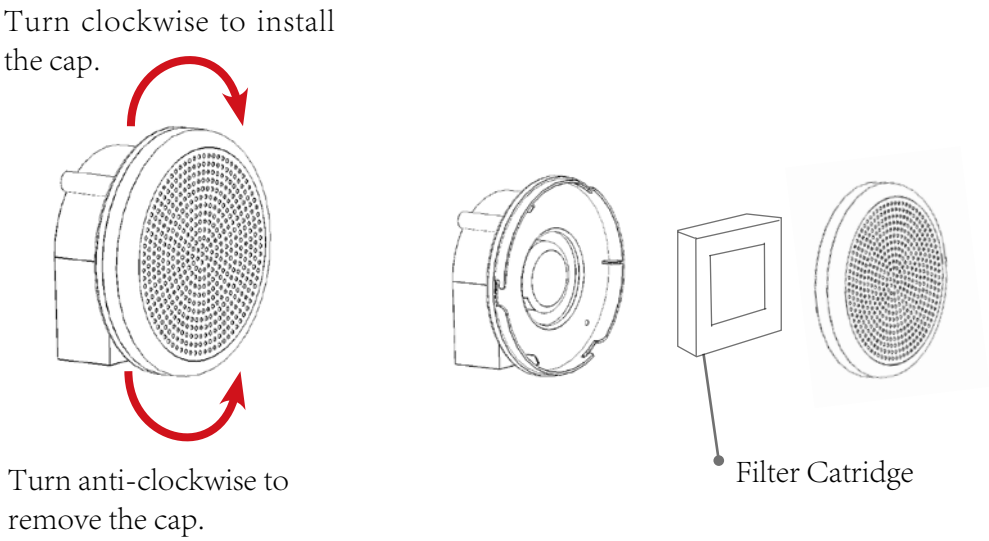

Troubleshooting

Problems	Solution
Printing or platform cannot reach target temp or over heat.	1.Initialize the printer.
	2.Heater catridge is broken, seek replacement.
	3. Cable is broken, replace the cable.
Cannot extrude plastic	1. Withdraw filament from print head, cut off the melted tip and reload it to the print head.
	2. Plastic clog the nozzle, replace new nozzle or remove the clog.
	3. The filament is too thick. Usually happens when using filament with poor quality. Please use UP Fila filament.
	4. For some model, if PLA consistently cause problem, switch to ABS.
Cannot detect the printer	1. Install the printer driver correctly.
	2. Check for defective USB cable.
	3. Restart printer and Computer
Others	Contact technical support: support@tiertime.net

Appendix A - Fine Manual Calibration

1. Setting nozzle height.
2. Setting compensation values.

Open: Menu - 3D Print - Platform Calibrate

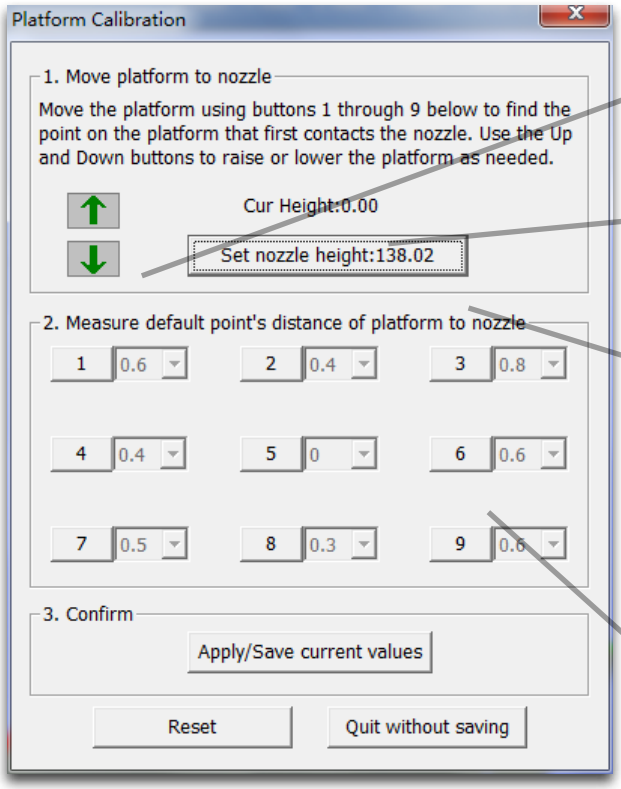

A. Moving Platform UP/DOWN: click/hold the button, platform will move accordingly.

B. Display the current platform height.

C. Setting nozzle height: click this will set the current platform height as the nozzle height.

D. 9 calibration point buttons, represent 9 positions on platform, after clicking them the nozzle will move to the corresponding positions. The drop down menu beside the button is for setting leveling compensation values.

1. Protocol for setting nozzle height:

1. Initialize printer
2. Put a print paper on the platform.
3. Open the calibration interface and press the UP key, note the current height value, stop the platform at about 190.

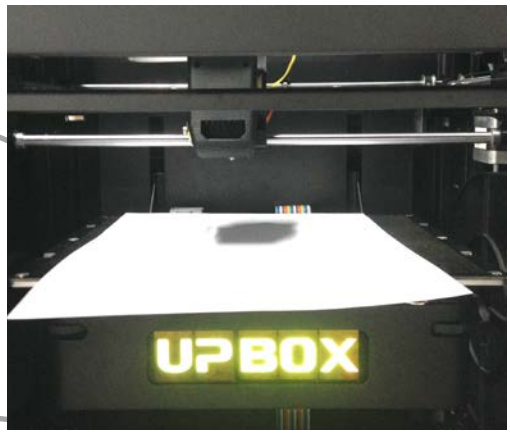

4 Hit the "5" button. Nozzle will go to the center of the platform.

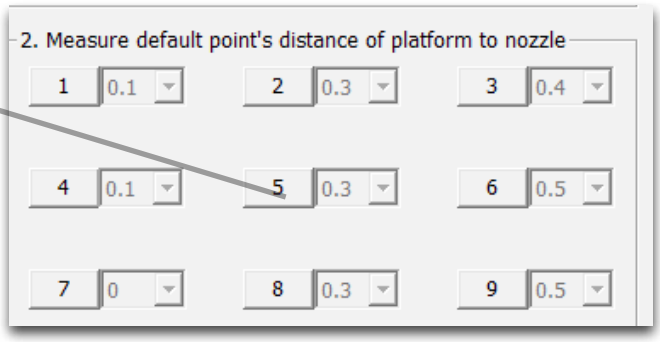

5 Raise the platform until it is just touching the nozzle. Move the paper between the nozzle and platform and see if there is any resistance.

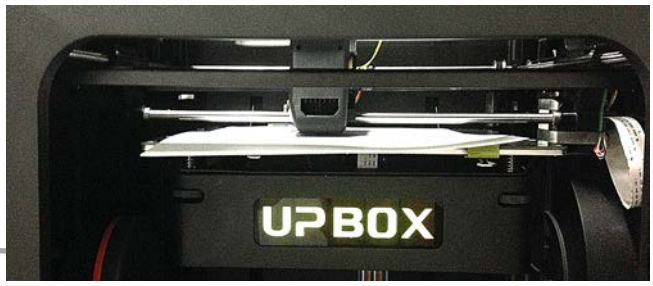

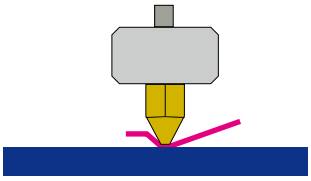

Platform too high, nozzle is pinning paper onto the platform, Lower the platfrom slightly.

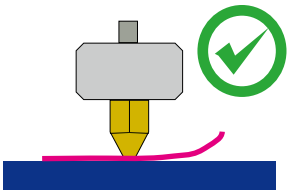

Just right, could feel some resistance when moving the paper.

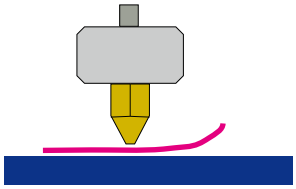

Platform too low, no resistance at all when moving paper, raise the platform slightly.

When obtained the right platform height, write down the value of "current height".

We will refer this as the **"platform height value".**

Repeat step 1- 6 for all other 8 positions and obtain their platform height values.

6

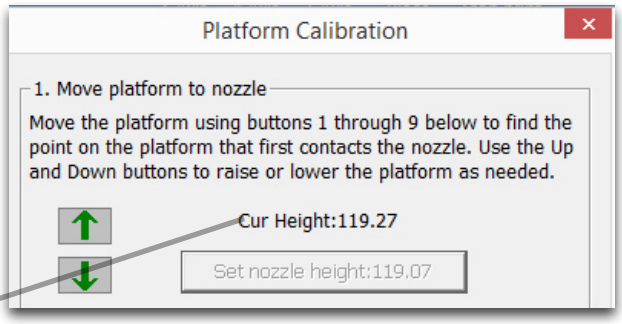

When obtained the platform height value of all 9 positions. Find out the smallest value among the 9 calibration points.

As you can see in this case, the calibration point 1 has the smallest platform height value, it is actully the highest point on the platform. Therefore the platform does not need to rise as high as the other points to reach the nozzle

7

Platform Values at 9 calibration points (hypothetical):

1: 208	2: 208.5	3: 208.7
4: 208.6	5: 208.9	6: 209
7: 208.8	8: 208.9	9: 208.8

We set this mimimum platform height as "Nozzle Height" since it is where the nozzle first start to touch the platform. Now go to calibration point 1 and rise platform to 208.

Click the button" Set Nozzle Height" to finish.

8

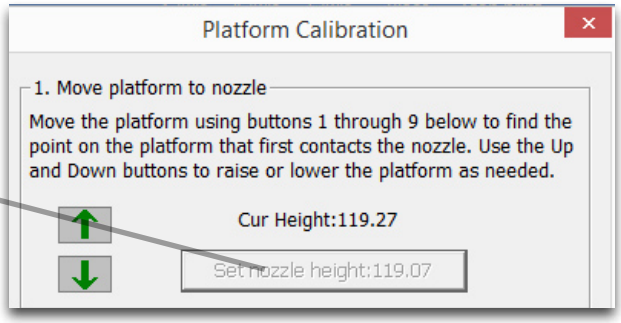

2. Setting Compensation Values

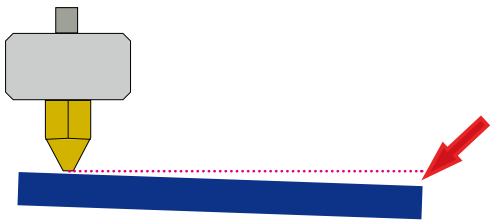

As shown in the left, when platform is at the "nozzle height", only part of the platform is close enough to the nozzle. Therefore we need to set compensation values for all other calibration points to inform the printer about the distance between nozzle and print surface throughout the XY plane.

Afte setting the nozzle height, the drop down menu next to the buttons will be available. A compensation value between 0 - 1.0 mm will be available for selection.

To calculate compensation value:

Platform height - Nozzle Height = Compensation Value

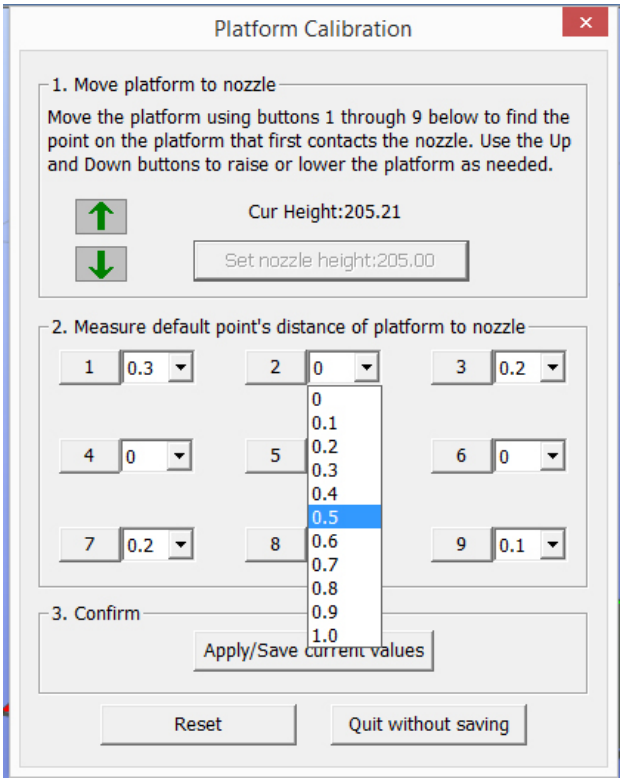

For example, setting the compensation value for calibration point No.3. Assume the "platform height" is 208.7 and the "nozzle height" is 208, the compensation value should be set to 0.7.

After setting 0.7 in the drop down menu, the nozzle will move to point No.3 and the platform will rise 0.7 mm. Now we can use the paper again to verify the compensation value.

After setting all calibration points click “Appy/Save Current Values ” to finish the calibration.

This device complies with Part 15 of the FCC Rules. Operation is subject to the following two conditions: (1) this device may not cause harmful interference, and (2) this device must accept any interference received, including interference that may cause undesired operation.

Changes or modifications not expressly approved by the party responsible for compliance could void the user's authority to operate the equipment.

NOTE: This equipment has been tested and found to comply with the limits for a Class B digital device, pursuant to Part 15 of the FCC Rules. These limits are designed to provide reasonable protection against harmful interference in a residential installation. This equipment generates, uses instructions, may cause harmful interference to radio communications. However, there is no guarantee that interference will not occur in a particular installation. If this equipment does cause harmful interference to radio or television reception, which can be determined by turning the equipment off and on, the user is encouraged to try to correct the interference by one or more of the following measures:

-- Reorient or relocate the receiving antenna.

-- Increase the separation between the equipment and receiver.

-- Connect the equipment into an outlet on a circuit different from that to which the receiver is connected.

-- Consult the dealer or an experienced radio/TV technician for help.

The distance between user and device should be no less than 20cm