FCC 47 CFR PART 15 SUBPART C

for

Bluetooth WIRELESS HEADSET

Model: BTH20,BM-884

Brand: AT&T

Test Report Number:

C140428Z02-RP2

Issued for

iLike Electronics Co.,Ltd.
Industrial Areas of iLike,Ju Ling old village,Da Shui Keng, Guanlan,Longhu New District,Shenzhen.China

Issued by:

Compliance Certification Services (Shenzhen) Inc.
No.10-1, Mingkeda Logistics Park, No.18 Huanguan South Rd.,
Guan Lan Town, Baoan District, Shenzhen, China
TEL: 86-755-28055000
FAX: 86-755-28055221

Issued Date: May 22, 2014

TESTING CERT #2861.01

检 测
CNAS L4818

Note: *This report shall not be reproduced except in full, without the written approval of Compliance Certification Services Inc. This document may be altered or revised by Compliance Certification Services Inc. personnel only, and shall be noted in the revision section of the document. The client should not use it to claim product endorsement by TAF, A2LA, NVLAP, NIST or any government agencies. The test results in the report only apply to the tested sample.*

Revision History

Rev.	Issue No.	Revisions	Effect Page	Revised By
00	C140428Z02-RP2	Initial Issue	ALL	Sinphy Xie

This report shall not be reproduced except in full, without the written approval of Compliance Certification Services.

TABLE OF CONTENTS

1 TEST CERTIFICATION 4
2 TEST RESULT SUMMARY 5
3 EUT DESCRIPTION 6
4 TEST METHODOLOGY 7
4.1. DESCRIPTION OF TEST MODES 7
5 SETUP OF EQUIPMENT UNDER TEST 8
5.1. DESCRIPTION OF SUPPORT UNITS 8
5.2. CONFIGURATION OF SYSTEM UNDER TEST 8
6 FACILITIES AND ACCREDITATIONS 9
6.1. FACILITIES 9
6.2. ACCREDITATIONS 9
6.3. MEASUREMENT UNCERTAINTY 9
7 FCC PART 15.247 REQUIREMENTS 10
7.1. POWER LINE CONDUCTED EMISSIONS MEASUREMENT 10
7.2. SPURIOUS EMISSIONS MEASUREMENT 14
7.3. 6dB BANDWIDTH MEASUREMENT 27
7.4. PEAK OUTPUT POWER 30
7.5. BAND EDGES MEASUREMENT 32
7.6. PEAK POWER SPECTRAL DENSITY MEASUREMENT 38

This report shall not be reproduced except in full, without the written approval of Compliance Certification Services.

1 TEST CERTIFICATION

Product	Bluetooth WIRELESS HEADSET
Model	BTH20,BM-884
Brand	AT&T
Tested	April 28~May 16, 2014
Applicant	**iLike Electronics Co.,Ltd.** Industrial Areas of iLike,Ju Ling old village,Da Shui Keng, Guanlan,Longhua New District,Shenzhen.China
Manufacturer	**iLike Electronics Co.,Ltd.** Industrial Areas of iLike,Ju Ling old village,Da Shui Keng, Guanlan,Longhua New District,Shenzhen.China

APPLICABLE STANDARDS			
Standard	**Test Type**	**Standard**	**Test Type**
15.207(a)	Power Line Conducted Emissions	15.247(d) 15.209(a)	● Spurious Emissions ● Conducted Measurement ● Radiated Emissions
15.247(a)(2)	6dB Bandwidth Measurement	15.247(b)(3) 15.247(b)(4)	Peak Power Measurement
15.247(d)	Band Edges Measurement	15.247(e)	Peak Power Spectral Density

We hereby certify that:

The above equipment was tested by Compliance Certification Services Inc. The test data, data evaluation, test procedures, and equipment configurations shown in this report were made in accordance with the procedures given in **ANSI C63.4: 2009** and the energy emitted by the sample EUT tested as described in this report is in compliance with the requirements of FCC Rules Part 15.207, 15.209, 15.247.

The test results of this report relate only to the tested sample EUT identified in this report.

Approved by:

Sunday Hu
Supervisor of EMC Dept.
Compliance Certification Service Inc.

Reviewed by:

Ruby Zhang
Supervisor of Report Dept.
Compliance Certification Service Inc.

This report shall not be reproduced except in full, without the written approval of Compliance Certification Services.

2 TEST RESULT SUMMARY

APPLICABLE STANDARDS			
Standard	**Test Type**	**Result**	**Remark**
15.247(a)(2)	6dB Bandwidth Measurement	Pass	Meet the requirement of limit.
15.247(b)(3) 15.247(b)(4)	Peak Power Measurement	Pass	Meet the requirement of limit.
15.247(d)	Band Edges Measurement	Pass	Meet the requirement of limit.
15.247(e)	Peak Power Spectral Density	Pass	Meet the requirement of limit.
15.247(d) 15.209(a)	● Spurious Emissions ● Conducted Measurement ● Radiated Emissions	Pass	Meet the requirement of limit.
15.207(a)	Power line Conducted Emissions	Pass	Meet the requirement of limit.

Note: 1. The statements of test result on the above are decided by the request of test standard only; the measurement uncertainties are not factored into this compliance determination.
2. The information of measurement uncertainty is available upon the customer's request.

This report shall not be reproduced except in full, without the written approval of Compliance Certification Services.

3 EUT DESCRIPTION

Product	Bluetooth WIRELESS HEADSET
Model	BTH20,BM-884
Brand	AT&T
Model Discrepancy	They are the same product just different from product name.
Identify Number	C140428Z02-RP2
Received Date	April 28, 2014
Power Supply	DC5V supplied by the notebook or DC3.7V supplied by the battery
USB Cable	Unshielded, 1.00m
Audio Cable	Unshielded, 0.90m
Frequency Range	2402-2480 MHz
Transmit Power	4.11dBm
Modulation Technique	GFSK for 1Mbps
Number of Channels	40 Channels
Antenna Specification	PCB Antenna with 0dBi gain(Max)
Temperature Range	-20°C ~ +55°C
Hardware Version	V4.0
Software Version	V4.0

Note: *1. The sample selected for test was engineering sample that approximated to production product and was provided by manufacturer.*

2. This submittal(s) (test report) is intended for FCC ID:2AAHXBTH20 filing to comply with Section 15.207, 15.209 and 15.247of the FCC Part 15, Subpart C Rules.

This report shall not be reproduced except in full, without the written approval of Compliance Certification Services.

4 TEST METHODOLOGY

4.1. DESCRIPTION OF TEST MODES

The EUT has been tested under operating condition.

Software used to control the EUT for staying in continuous transmitting and receiving mode is programmed.

Test Item	Test mode	Worse mode
Conducted Emission	**Mode 1:** Charge + Line in	☒
	Mode 2: Charge + play music with BT	☐
Radiated Emission	**Mode 1:** TX	☒

After verification, all tests were carried out with the worst case test modes as shown below except radiated spurious emission below 1GHz, which worst case was in normal link mode only.

This report shall not be reproduced except in full, without the written approval of Compliance Certification Services.

5 SETUP OF EQUIPMENT UNDER TEST

5.1. DESCRIPTION OF SUPPORT UNITS

The EUT has been tested as an independent unit together with other necessary accessories or support units. The following support units or accessories were used to form a representative test configuration during the tests.

No.	Equipment	Model No.	Serial No.	FCC ID	Trade Name	Data Cable	Power Cord
1.	Notebook	992F2VG	62P7043	N/A	IBM	N/A	Unshielded 2.50m
2.	PC	DCSM1F	B8AC6F2474CE	N/A	DELL	N/A	Unshielded 1.50m
3	LCD	U3011T	CNOPH5NY744450 97425L	N/A	DELL	Shielded 1.50m	Unshielded 1.50m
4	Mouse	KB212-B	CN09RRC44751168 0996	N/A	DELL	Unshielded 1.45m	N/A
5	Keyboard	KB212-B	CNOK6KPN71616	N/A	DELL	Unshielded 1.45m	N/A
6	Printer	D1668	CN9CKCB2RG	N/A	HP	Unshielded 1.20m	Unshielded 2.00m
7	Modem	DU-562M	DU562MSG.B1	N/A	D-Link	Shielded 1.50m	N/A

Note:

Grounding was established in accordance with the manufacturer's requirements and conditions for the intended use.

5.2. CONFIGURATION OF SYSTEM UNDER TEST

See test photographs attached in Appendix II for the actual connections between EUT and support equipment.

This report shall not be reproduced except in full, without the written approval of Compliance Certification Services.

6 FACILITIES AND ACCREDITATIONS

6.1. FACILITIES

All measurement facilities used to collect the measurement data are located at

☒ **No.10-1, Mingkeda Logistics Park, No.18, Huanguan South Rd., Guan Lan Town, Baoan District, Shenzhen, China**

The sites are constructed in conformance with the requirements of ANSI C63.4, ANSI C63.7 and CISPR Publication 22. All receiving equipment conforms to CISPR Publication 16-1, "Radio Interference Measuring Apparatus and Measurement Methods."

6.2. ACCREDITATIONS

Our laboratories are accredited and approved by the following accreditation body according to ISO/IEC 17025.

USA	**A2LA**
China	**CNAS**

The measuring facility of laboratories has been authorized or registered by the following approval agencies.

USA	**FCC**
Japan	**VCCI(C-3478, R-3135, T-652, G-624)**
Canada	**INDUSTRY CANADA**
Taiwan	**BSMI**
Norway	**Nemko**

Copies of granted accreditation certificates are available for downloading from our web site, http://www.ccsrf.com

6.3. MEASUREMENT UNCERTAINTY

Where relevant, the following measurement uncertainty levels have been estimated for tests performed on the EUT as specified in CISPR 16-4-2:

Parameter	Uncertainty
Radiated Emission, 30 to 200 MHz Test Site : 966(2)	+/-3.6880dB
Radiated Emission, 200 to 1000 MHz Test Site : 966(2)	+/-3.6695dB
Radiated Emission, 1 to 8 GHz	+/-5.1782dB
Radiated Emission, 8 to 18 GHz	+/-5.2173dB
Conducted Emissions	+/-3.6836dB
Band Width	178kHz
Peak Output Power MU	+/-1.906dB
Band Edge MU	+/-0.182dB
Channel Separation MU	416.178Hz
Duty Cycle MU	0.054ms
Frequency Stability MU	226Hz

This uncertainty represents an expanded uncertainty expressed at approximately the 95% confidence level using a coverage factor of k=2.

The measured result is above (below) the specification limit by a margin less than the measurement uncertainty; it is therefore not possible to state compliance based on the 95% level of confidence. However, the result indicates that compliance (non-compliance) is more probable than non-compliance) with the specification limit.

This report shall not be reproduced except in full, without the written approval of Compliance Certification Services.

7 FCC PART 15.247 REQUIREMENTS

7.1. POWER LINE CONDUCTED EMISSIONS MEASUREMENT

7.1.1. LIMITS OF CONDUCTED EMISSIONS MEASUREMENT

According to §15.207(a), except as shown in paragraphs (b) and (c) of this section, for an intentional radiator that is designed to be connected to the public utility (AC) power line, the radio frequency voltage that is conducted back onto the AC power line on any frequency or frequencies within the band 150 kHz to 30 MHz shall not exceed the limits in the following table, as measured using a 50 µH/50 ohms line impedance stabilization network (LISN). Compliance with the provisions of this paragraph shall be based on the measurement of the radio frequency voltage between each power line and ground at the power terminal. The lower limit applies at the boundary between the frequency ranges.

Frequency Range (MHz)	Limits (dBµV)	
	Quasi-peak	Average
0.15 to 0.50	66 to 56*	56 to 46*
0.50 to 5	56	46
5 to 30	60	50

NOTE:

(1) The lower limit shall apply at the transition frequencies.
(2) The limit decreases in line with the logarithm of the frequency in the range of 0.15 to 0.50 MHz.
(3) All emanations from a class A/B digital device or system, including any network of conductors and apparatus connected thereto, shall not exceed the level of field strengths specified above.

7.1.2. TEST INSTRUMENTS

Conducted Emission Test Site					
Name of Equipment	Manufacturer	Model Number	Serial Number	Last Calibration	Due Calibration
EMI TEST RECEIVER	ROHDE&SCHWARZ	ESCI	100783	03/09/2014	03/08/2015
LISN(EUT)	ROHDE&SCHWARZ	ENV216	101543-WX	04/20/2014	04/19/2015
LISN	EMCO	3825/2	8901-1459	03/09/2014	03/08/2015
Temp. / Humidity Meter	VICTOR	HTC-1	N/A	03/17/2014	03/17/2015
Test S/W	FARAD	EZ-EMC/ CCS-3A1-CE			

NOTE: 1. The calibration interval of the above test instruments is 12 months and the calibrations are traceable to NML/ROC and NIST/USA.

2. N.C.R = No Calibration Request.

This report shall not be reproduced except in full, without the written approval of Compliance Certification Services.

7.1.3. TEST PROCEDURES (please refer to measurement standard)

- The EUT and Support equipment, if needed, was placed on a non-conducted table, which is 0.8m above the ground plane and 0.4m away from the conducted wall.
- The test equipment EUT installed received AC main power, through a Line Impedance Stabilization Network (LISN), which supplied power source and was grounded to the ground plane. All support equipment power received from a second LISN. The two LISNs provide 50 ohm/ 50uH of coupling impedance for the measuring instrument.
- The EUT test program was started. Emissions were measured on each current carrying line of the EUT using an EMI Test Receiver connected to the LISN powering the EUT.
- The frequency range from 150 kHz to 30 MHz was searched. The test data of the worst-case condition(s) was recorded. Emission levels under limit 20dB were not recorded.

This report shall not be reproduced except in full, without the written approval of Compliance Certification Services.

7.1.4. TEST SETUP

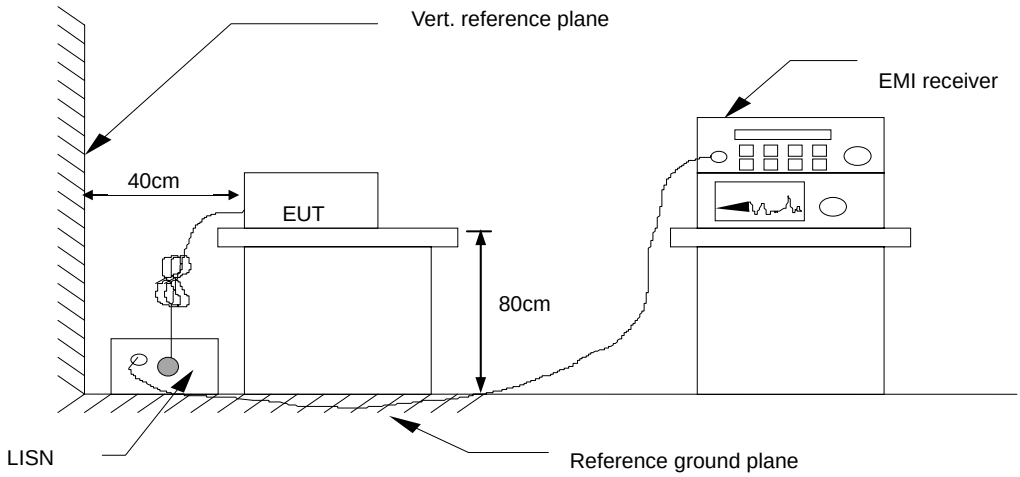

For the actual test configuration, please refer to the related item – Photographs of the Test Configuration.

7.1.5. DATA SAMPLE

Frequency (MHz)	QuasiPeak Reading (dBuV)	Average Reading (dBuV)	Correction Factor (dB)	QuasiPeak Result (dBuV)	Average Result (dBuV)	QuasiPeak Limit (dBuV)	Average Limit (dBuV)	QuasiPeak Margin (dB)	Average Margin (dB)	Remark (Pass/Fail)
X.XXXX	34.99	19.33	10.15	45.14	29.48	65.99	56.00	-20.85	-26.52	Pass

Factor = Insertion loss of LISN + Cable Loss
Result = Quasi-peak Reading/ Average Reading + Factor
Limit = Limit stated in standard
Margin = Result (dBuV) – Limit (dBuV)

This report shall not be reproduced except in full, without the written approval of Compliance Certification Services.

7.1.6. TEST RESULTS

Test Data

Operation Mode: Charge + Play Audio **Test Date:** May 4, 2014

Temperature: 26°C **Humidity:** 60% RH

Tested by: Eve Wang

Frequency (MHz)	QuasiPeak Reading (dBuV)	Average Reading (dBuV)	Correction Factor (dB)	QuasiPeak Result (dBuV)	Average Result (dBuV)	QuasiPeak Limit (dBuV)	Average Limit (dBuV)	QuasiPeak Margin (dB)	Average Margin (dB)	Line (L1/L2)
0.1500	37.93	31.68	9.58	47.51	41.26	65.99	56.00	-18.48	-14.74	L1
0.2620	28.02	17.31	9.69	37.71	27.00	61.36	51.37	-23.65	-24.37	L1
0.5260	26.04	14.86	9.69	35.73	24.55	56.00	46.00	-20.27	-21.45	L1
3.7820	38.68	24.55	9.70	48.38	34.25	56.00	46.00	-7.62	-11.75	L1
4.4540	38.73	28.47	9.69	48.42	38.16	56.00	46.00	-7.58	-7.84	L1
12.3540	34.58	24.62	9.89	44.47	34.51	60.00	50.00	-15.53	-15.49	L1
0.1500	36.26	30.95	9.78	46.04	40.73	65.99	56.00	-19.95	-15.27	L2
0.5299	26.65	15.11	9.68	36.33	24.79	56.00	46.00	-19.67	-21.21	L2
3.9140	38.09	28.44	9.76	47.85	38.20	56.00	46.00	-8.15	-7.80	L2
4.4540	39.43	29.26	9.77	49.20	39.03	56.00	46.00	-6.80	-6.97	L2
8.3700	34.15	25.35	9.83	43.98	35.18	60.00	50.00	-16.02	-14.82	L2
12.3540	34.92	25.99	9.80	44.72	35.79	60.00	50.00	-15.28	-14.21	L2

Note:

1. *Measuring frequencies from 0.15 MHz to 30MHz.*
2. *The emissions measured in frequency range from 0.15 MHz to 30MHz were made with an instrument using Peak detector, Quasi-peak detector and average detector.*
3. *"---" denotes the emission level was or more than 2dB below the Average limit.*
4. *The IF bandwidth of SPA between 0.15MHz to 30MHz was 10kHz; the IF bandwidth of Test Receiver between 0.15MHz to 30MHz was 9kHz;*
5. *L1= Line One (Live Line)/ L2= Line Two (Neutral Line)*

This report shall not be reproduced except in full, without the written approval of Compliance Certification Services.

7.2. SPURIOUS EMISSIONS MEASUREMENT

7.2.1. LIMITS OF CONDUCTED EMISSIONS MEASUREMENT

According to §15.247(d), in any 100 kHz bandwidth outside the frequency bands in which the spread spectrum intentional radiator in operating, the radio frequency power that is produced by the intentional radiator shall be at least 20 dB below that in the 100 kHz bandwidth within the band that contains the highest level of the desired power, based on either an RF conducted or a radiated measurement, provided the transmitter demonstrates compliance with the peak conducted power limits. In addition, radiated emissions which fall in the restricted bands, as defined in §15.205(a), must also comply with the radiated emission limits specified in 15.209(a) (see Section 15.205(c)).

7.2.2. TEST INSTRUMENTS

Name of Equipment	Manufacturer	Model	Serial Number	Last Calibration	Due Calibration
Spectrum Analyzer	Agilent	E4446A	US44300399	03/01/2014	03/01/2015

7.2.3. TEST PROCEDURE (please refer to measurement standard)

Conducted RF measurements of the transmitter output were made to confirm that the EUT antenna port conducted emissions meet the specified limit and to identify any spurious signals that require further investigation or measurements on the radiated emissions site.
The transmitter output is connected to the spectrum analyzer. The resolution bandwidth is set to 100 kHz. The video bandwidth is set to 300 kHz.
Measurements are made over the 30MHz to 26.5GHz range with the transmitter set to the lowest, middle, and highest channels.

This report shall not be reproduced except in full, without the written approval of Compliance Certification Services.

7.2.4. TEST RESULTS

Test Plot

CH Low (30MHz ~26.5GHz)

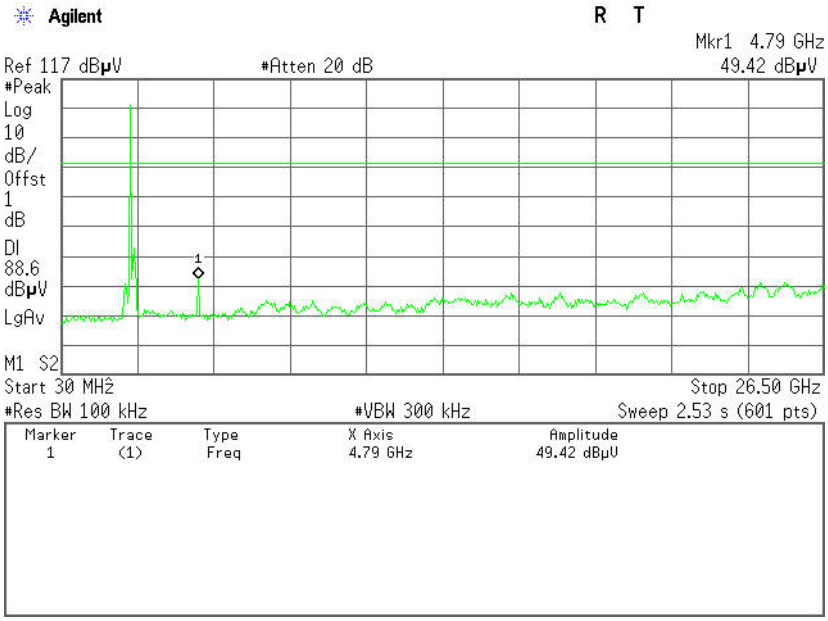

CH Low (2.31GHz ~2.41GHz)

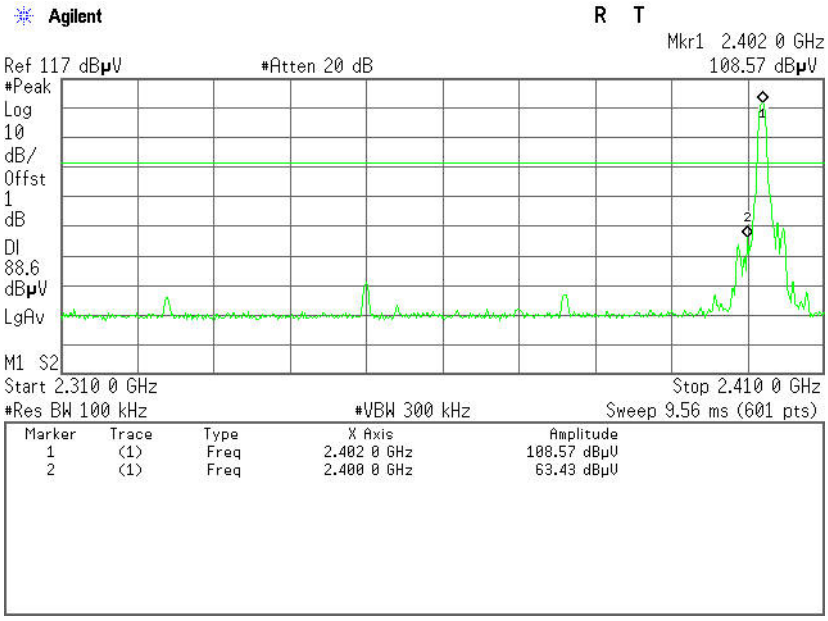

This report shall not be reproduced except in full, without the written approval of Compliance Certification Services.

CH Mid (30MHz ~26.5GHz)

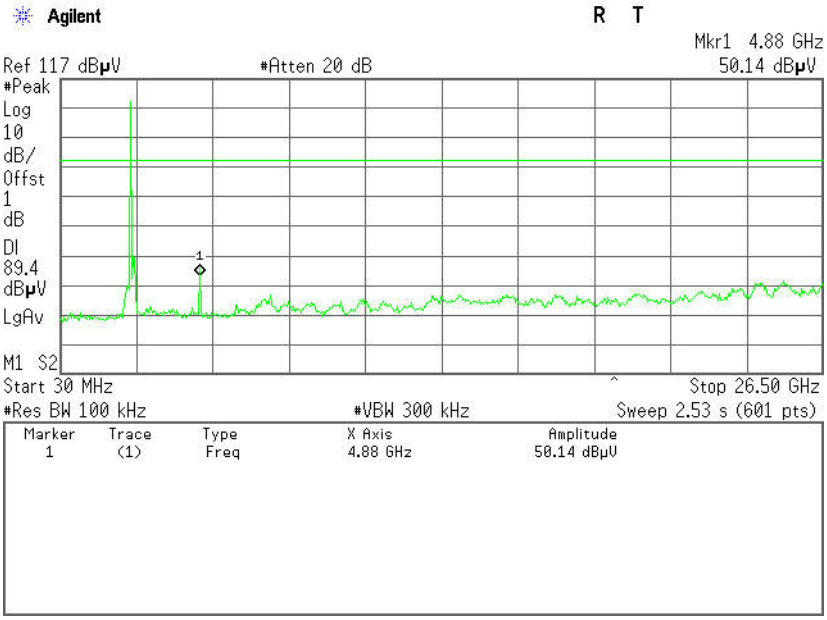

CH High (30MHz ~26.5GHz)

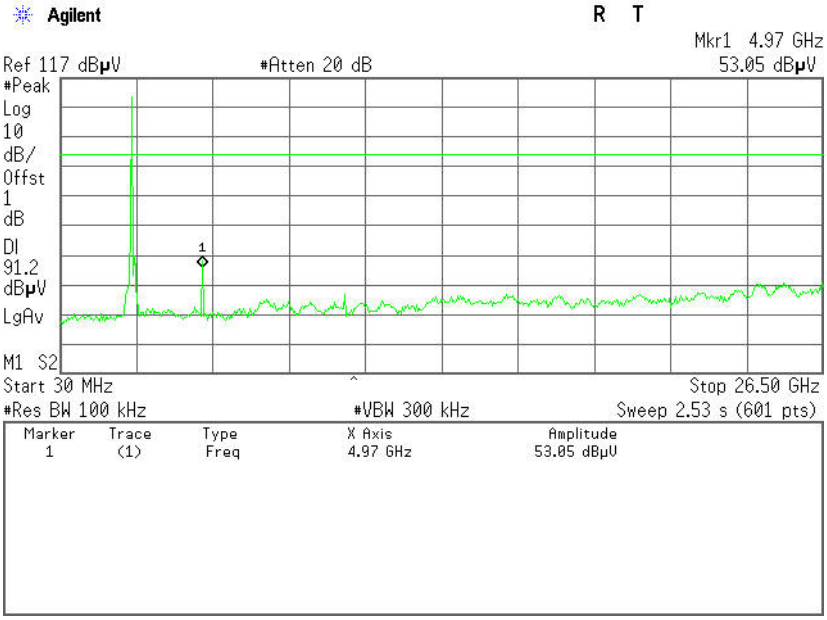

This report shall not be reproduced except in full, without the written approval of Compliance Certification Services.

CH High(2.475GHz ~2.5GHz)

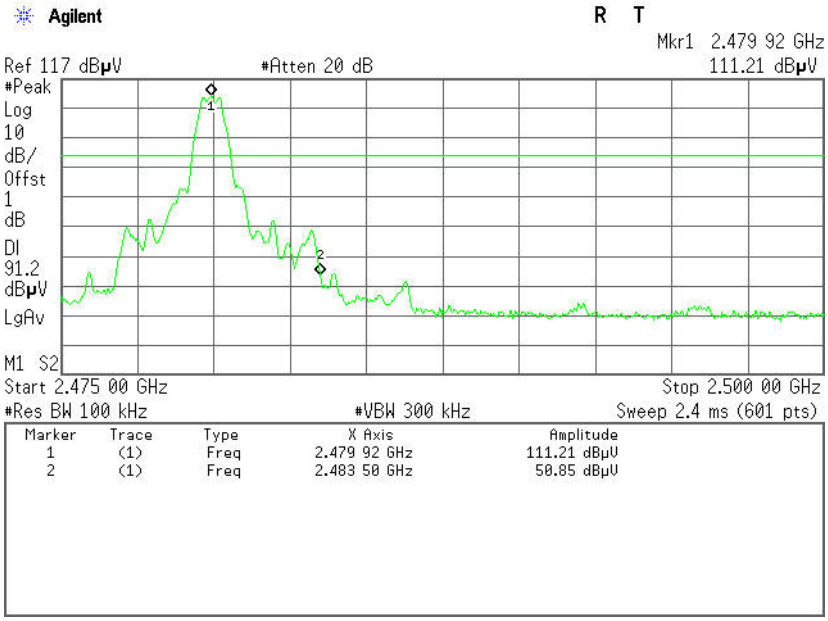

This report shall not be reproduced except in full, without the written approval of Compliance Certification Services.

7.2.4.1. LIMITS OF RADIATED EMISSIONS MEASUREMENT

According to §15.209(a), except as provided elsewhere in this Subpart, the emissions from an intentional radiator shall not exceed the field strength levels specified in the following table:

Frequency (MHz)	Field Strength (mV/m)	Measurement Distance (m)
0.009-0.490	2400/F(kHz)	300
0.490-1.705	24000/F(kHz)	30
1.705-30.0	30	30
30-88	100*	3
88-216	150*	3
216-960	200*	3
Above 960	500	3

Remark: Except as provided in paragraph (g), fundamental emissions from intentional radiators operating under this Section shall not be located in the frequency bands 54-72 MHz, 76-88 MHz, 174-216 MHz or 470-806 MHz. However, operation within these frequency bands is permitted under other sections of this Part, e.g., Sections 15.231 and 15.241.

1. In the emission table above, the tighter limit applies at the band edges.

Frequency (MHz)	Field Strength (µV/m at 3-meter)	Field Strength (dBµV/m at 3-meter)
30-88	100	40
88-216	150	43.5
216-960	200	46
Above 960	500	54

NOTE: (1) The lower limit shall apply at the transition frequencies.

(2) Emission level (dBuV/m) = 20 log Emission level (uV/m).

This report shall not be reproduced except in full, without the written approval of Compliance Certification Services.

7.2.4.2. TEST INSTRUMENTS

Radiated Emission Test Site 966（2）					
Name of Equipment	**Manufacturer**	**Model Number**	**Serial Number**	**Last Calibration**	**Due Calibration**
PSA Series Spectrum Analyzer	Agilent	E4446A	US44300399	03/01/2014	03/01/2015
EMI TEST RECEIVER	ROHDE&SCHWARZ	ESCI	100783	03/09/2014	03/08/2015
Amplifier	MITEQ	AM-1604-3000	1123808	03/18/2014	03/18/2015
High Noise Amplifier	Agilent	8449B	3008A01838	03/18/2014	03/18/2015
Bilog Antenna	SCHAFFNER	CBL6143	5082	03/01/2014	03/01/2015
Horn Antenna	SCHWARZBECK	BBHA9120	D286	03/01/2014	03/01/2015
Board-Band Horn Antenna	SCHWARZBECK	BBHA9170	9170-497	07/10/2013	07/09/2014
Loop Antenna	A、R、A	PLA-1030/B	1029	03/19/2014	03/18/2015
Turn Table	N/A	N/A	N/A	N.C.R	N.C.R
Controller	Sunol Sciences	SC104V	022310-1	N.C.R	N.C.R
Controller	CT	N/A	N/A	N.C.R	N.C.R
Temp. / Humidity Meter	Anymetre	JR913	N/A	02/28/2014	02/28/2015
Antenna Tower	SUNOL	TLT2	N/A	N.C.R	N.C.R
Test S/W	FARAD	LZ-RF / CCS-SZ-3A2			

NOTE: 1. The calibration interval of the above test instruments is 12 months and the calibrations are traceable to NML/ROC and NIST/USA.

2. The FCC Site Registration number is 101879.

3. N.C.R = No Calibration Required.

This report shall not be reproduced except in full, without the written approval of Compliance Certification Services.

7.2.4.3. TEST PROCEDURE **(please refer to measurement standard)**

1. The EUT is placed on a turntable, which is 0.8m above ground plane.
2. The turntable shall be rotated for 360 degrees to determine the position of maximum emission level.
3. EUT is set 3m away from the receiving antenna, which is varied from 1m to 4m to find out the highest emissions.
4. Maximum procedure was performed on the six highest emissions to ensure EUT compliance.
5. And also, each emission was to be maximized by changing the polarization of receiving antenna both horizontal and vertical.
6. Set the spectrum analyzer in the following setting as:

   Below 1GHz:

   RBW=100kHz / VBW=300kHz / Sweep=AUTO

   Above 1GHz:

   (a) PEAK: RBW=VBW=1MHz / 3 MHz / Sweep=AUTO

   (b) AVERAGE: RBW=1MHz / VBW=10Hz / Sweep=AUTO
7. Repeat above procedures until the measurements for all frequencies are complete.

7.2.4.4. TEST SETUP

Below 30MHz

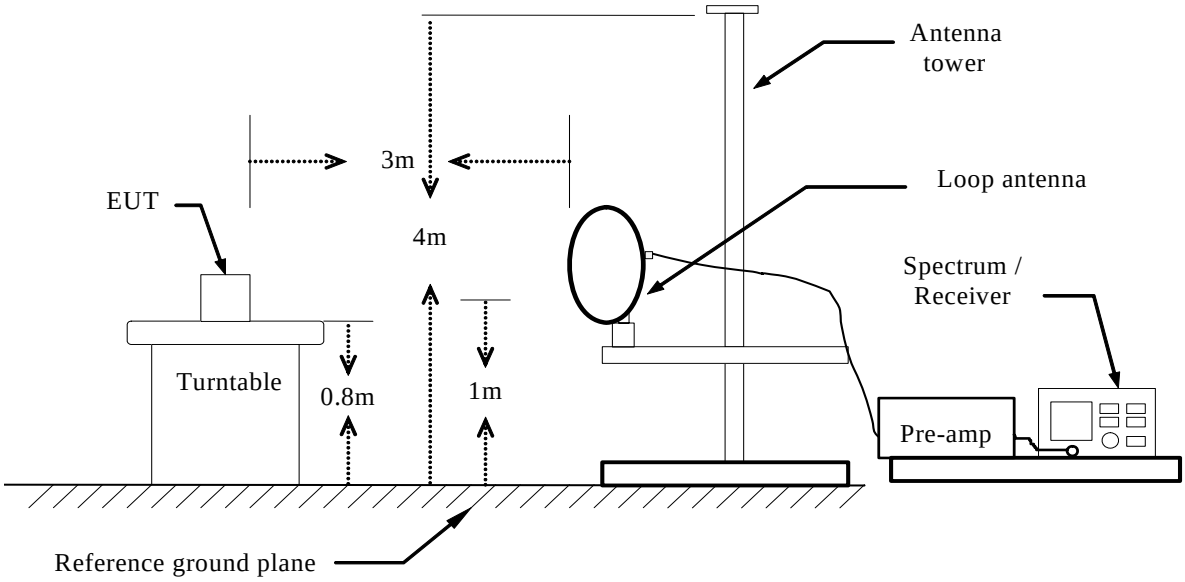

This report shall not be reproduced except in full, without the written approval of Compliance Certification Services.

Below 1 GHz

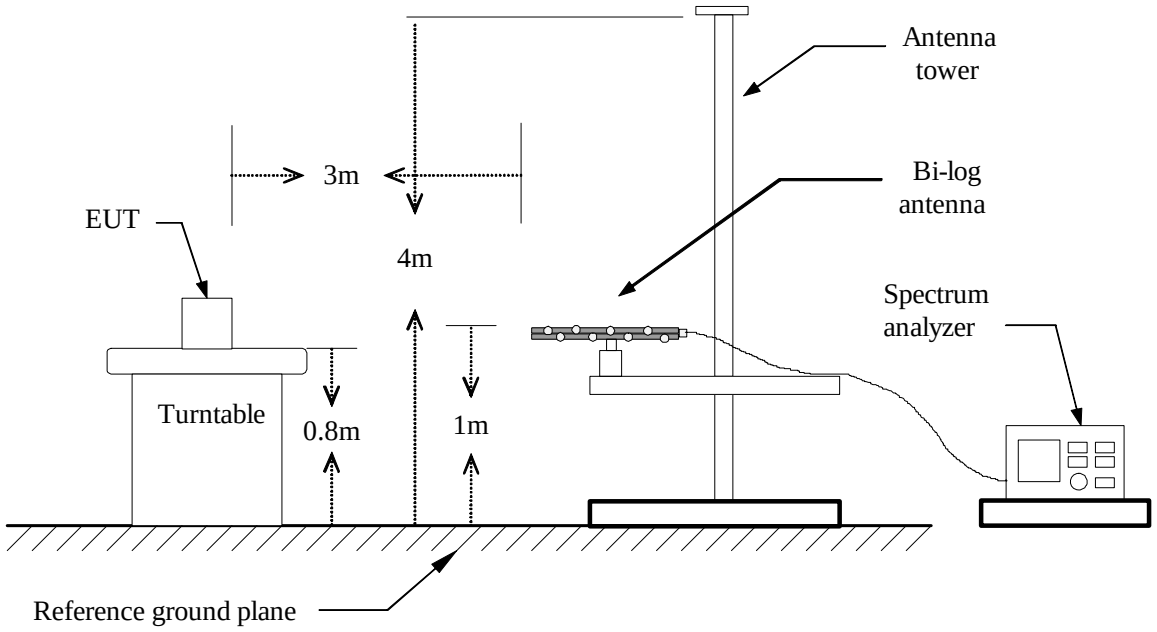

Above 1 GHz

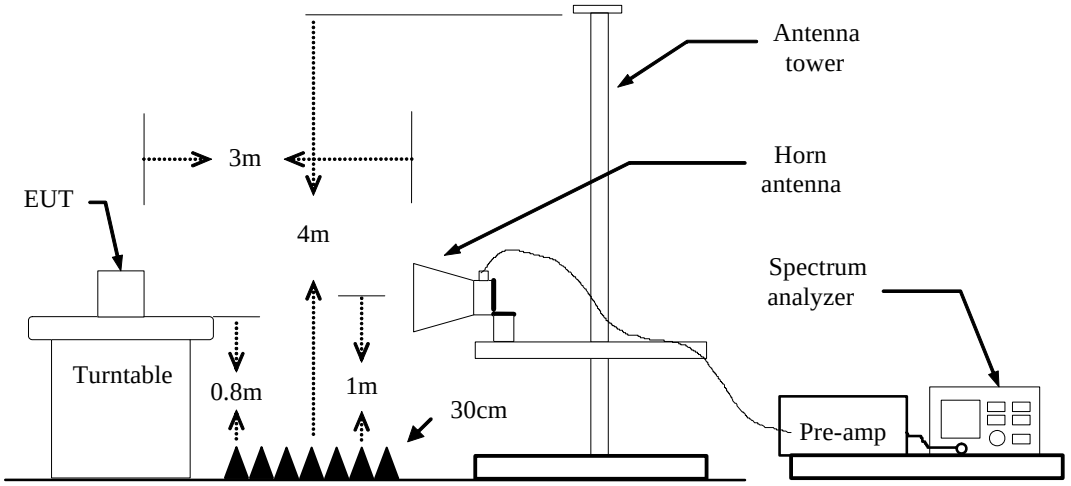

For the actual test configuration, please refer to the related item – Photographs of the Test Configuration.

This report shall not be reproduced except in full, without the written approval of Compliance Certification Services.

7.2.4.5. DATA SAMPLE

Below 1GHz

Frequency (MHz)	Reading (dBuV)	Correct Factor (dB/m)	Result (dBuV/m)	Limit (dBuV/m)	Margin (dB)	Antenna Pole (V/H)	Remark
XXX.XXXX	53.41	-18.63	34.78	43.50	-8.72	V	QP

Frequency (MHz) = Emission frequency in MHz
Reading (dBuV) = Uncorrected Analyzer / Receiver reading
Correct Factor (dB/m) = Antenna factor + Cable loss – Amplifier gain
Result (dBuV/m) = Reading (dBuV) + Corr. Factor (dB/m)
Limit (dBuV/m) = Limit stated in standard
Margin (dB) = Result (dBuV/m) – Limit (dBuV/m)
Q.P. = Quasi-peak Reading

Above 1GHz

Frequency (MHz)	Reading (dBuV)	Correction Factor (dB/m)	Result (dBuV/m)	Limit (dBuV/m)	Margin (dB)	Antenna Pole (V/H)	Remark
XXXX.XXXX	62.09	-11.42	50.67	74.00	-23.33	V	Peak
XXXX.XXXX	49.78	-11.42	38.36	54.00	-15.64	V	AVG

Frequency (MHz) = Emission frequency in MHz
Reading (dBuV) = Uncorrected Analyzer / Receiver reading
Correction Factor (dB/m) = Antenna factor + Cable loss – Amplifier gain
Result (dBuV/m) = Reading (dBuV) + Corr. Factor (dB/m)
Limit (dBuV/m) = Limit stated in standard
Margin (dB) = Result (dBuV/m) – Limit (dBuV/m)
Peak = Peak Reading
AVG = Average Reading

Calculation Formula

Margin (dB) = Result (dBuV/m) – Limits (dBuV/m)
Result (dBuV/m) = Reading (dBuV) + Correction Factor

This report shall not be reproduced except in full, without the written approval of Compliance Certification Services.

7.2.4.6. TEST RESULTS

Below 1 GHz

Operation Mode: TX **Test Date:** May 5, 2014

Temperature: 24°C **Tested by:** Eve Wang

Humidity: 52% RH **Polarity:** Ver. / Hor.

(The chart below shows the highest readings taken from the final data.)

Frequency (MHz)	Reading (dBµV)	Correction Factor (dB/m)	Result (dBµV/m)	Limit (dBµV/m)	Margin (dB)	Antenna Pole (V/H)	Remark
31.9400	39.96	-12.80	27.16	40.00	-12.84	V	QP
144.4600	48.20	-21.48	26.72	43.50	-16.78	V	QP
199.7500	50.56	-22.73	27.83	43.50	-15.67	V	QP
321.9700	48.99	-18.83	30.16	46.00	-15.84	V	QP
399.5700	44.82	-16.10	28.72	46.00	-17.28	V	QP
700.2700	38.90	-11.94	26.96	46.00	-19.04	V	QP
75.5900	56.19	-26.25	29.94	40.00	-10.06	H	QP
152.2200	57.16	-21.93	35.23	43.50	-8.27	H	QP
199.7500	55.13	-22.73	32.40	43.50	-11.10	H	QP
404.4200	53.60	-15.88	37.72	46.00	-8.28	H	QP
427.7000	50.91	-15.55	35.36	46.00	-10.64	H	QP
600.3600	40.85	-12.86	27.99	46.00	-18.01	H	QP

*****Remark:*** *No emission found between lowest internal used/generated frequency to 30MHz.*

Notes:

1. *Radiated emissions measured in frequency range from 9kHz to 1GHz were made with an instrument using Quasi-peak detector mode.*
2. *Data of measurement within this frequency range shown " --- " in the table above means the reading of emissions are attenuated more than 20dB below the permissible limits or the field strength is too small to be measured.*
3. *The IF bandwidth of Receiver between 30MHz to 1GHz was 120kHz.*
4. *Frequency (MHz). = Emission frequency in MHz*
   Reading (dBµV/m) = Receiver reading
   Correction Factor (dB) = Antenna factor + Cable loss – Amplifier gain
   Limit (dBµV/m) = Limit stated in standard
   Margin (dB) = Measured (dBµV/m) – Limits (dBµV/m)
   Antenna Pol e(H/V) = Current carrying line of reading

This report shall not be reproduced except in full, without the written approval of Compliance Certification Services.

Above 1 GHz

Operation Mode:	TX / CH Low	**Test Date:**	May 3, 2014
Temperature:	24°C	**Tested by:**	Eve Wang
Humidity:	52% RH	**Polarity:**	Ver. / Hor.

Frequency (MHz)	Reading (dBuV)	Correction Factor (dB/m)	Result (dBuV/m)	Limit (dBuV/m)	Margin (dB)	Antenna Pole (V/H)	Remark
1195.0000	50.28	-10.22	40.06	74.00	-33.94	V	Peak
2110.0000	46.12	-6.76	39.36	74.00	-34.64	V	Peak
3655.0000	43.27	-0.88	42.39	74.00	-31.61	V	Peak
4960.0000	41.55	3.68	45.23	74.00	-28.77	V	Peak
6070.0000	41.18	7.56	48.74	74.00	-25.26	V	Peak
7750.0000	41.78	7.61	49.39	74.00	-24.61	V	Peak
1600.0000	47.53	-8.38	39.15	74.00	-34.85	H	Peak
3790.0000	42.70	-0.74	41.96	74.00	-32.04	H	Peak
4810.0000	45.65	2.76	48.41	74.00	-25.59	H	Peak
6325.0000	41.50	7.44	48.94	74.00	-25.06	H	Peak
7645.0000	41.24	7.54	48.78	74.00	-25.22	H	Peak
8305.0000	40.78	8.02	48.80	74.00	-25.20	H	Peak

***REMARKS**:*

1. *Measuring frequencies from 1 GHz to the 10th harmonic of highest fundamental frequency.*
2. *Radiated emissions measured in frequency above 1000MHz were made with an instrument using peak/average detector mode.*
3. *Average test would be performed if the peak result were greater than the average limit or as required by the applicant.*
4. *Data of measurement within this frequency range shown " --- " in the table above means the reading of emissions are attenuated more than 20dB below the permissible limits or the field strength is too small to be measured.*
5. *Measurements above show only up to 6 maximum emissions noted, or would be lesser, with " N/A " remark, if no specific emissions from the EUT are recorded (ie: margin>20dB from the applicable limit) and considered that's already beyond the background noise floor.*
6. *Margin (dB) = Remark result (dBuV/m) – Average limit (dBuV/m).*

This report shall not be reproduced except in full, without the written approval of Compliance Certification Services.

Operation Mode:	TX / CH Mid	**Test Date:**	May 3, 2014
Temperature:	24°C	**Tested by:**	Eve Wang
Humidity:	52% RH	**Polarity:**	Ver. / Hor.

Frequency (MHz)	Reading (dBuV)	Correction Factor (dB/m)	Result (dBuV/m)	Limit (dBuV/m)	Margin (dB)	Antenna Pole (V/H)	Remark
1630.0000	51.62	-8.37	43.25	74.00	-30.75	V	Peak
4255.0000	43.01	0.19	43.20	74.00	-30.80	V	Peak
4885.0000	46.73	3.22	49.95	74.00	-24.05	V	Peak
5380.0000	42.51	4.26	46.77	74.00	-27.23	V	Peak
6070.0000	41.07	7.56	48.63	74.00	-25.37	V	Peak
7750.0000	41.34	7.61	48.95	74.00	-25.05	V	Peak
3850.0000	43.38	-0.68	42.70	74.00	-31.30	H	Peak
4885.0000	46.28	3.22	49.50	74.00	-24.50	H	Peak
6040.0000	41.01	7.57	48.58	74.00	-25.42	H	Peak
7315.0000	44.68	7.33	52.01	74.00	-21.99	H	Peak
7315.0000	35.88	7.33	43.21	54.00	-10.79	H	AVG
8410.0000	40.63	8.10	48.73	74.00	-25.27	H	Peak
8875.0000	40.60	8.48	49.08	74.00	-24.92	H	Peak

REMARKS:

1. *Measuring frequencies from 1 GHz to the 10th harmonic of highest fundamental frequency.*
2. *Radiated emissions measured in frequency above 1000MHz were made with an instrument using peak/average detector mode.*
3. *Average test would be performed if the peak result were greater than the average limit or as required by the applicant.*
4. *Data of measurement within this frequency range shown " --- " in the table above means the reading of emissions are attenuated more than 20dB below the permissible limits or the field strength is too small to be measured.*
5. *Measurements above show only up to 6 maximum emissions noted, or would be lesser, with " N/A " remark, if no specific emissions from the EUT are recorded (ie: margin>20dB from the applicable limit) and considered that's already beyond the background noise floor.*
6. *Margin (dB) = Remark result (dBuV/m) – Average limit (dBuV/m).*

This report shall not be reproduced except in full, without the written approval of Compliance Certification Services.

Operation Mode:	TX / CH High	**Test Date:**	May 3, 2014
Temperature:	24°C	**Tested by:**	Eve Wang
Humidity:	52% RH	**Polarity:**	Ver. / Hor.

Frequency (MHz)	Reading (dBuV)	Correction Factor (dB/m)	Result (dBuV/m)	Limit (dBuV/m)	Margin (dB)	Antenna Pole (V/H)	Remark
1195.0000	50.06	-10.22	39.84	74.00	-34.16	V	Peak
3445.0000	43.79	-1.56	42.23	74.00	-31.77	V	Peak
4300.0000	42.65	0.32	42.97	74.00	-31.03	V	Peak
5140.0000	41.15	4.05	45.20	74.00	-28.80	V	Peak
6250.0000	40.68	7.47	48.15	74.00	-25.85	V	Peak
7570.0000	41.04	7.49	48.53	74.00	-25.47	V	Peak
1600.0000	48.30	-8.38	39.92	74.00	-34.08	H	Peak
3835.0000	44.08	-0.70	43.38	74.00	-30.62	H	Peak
4960.0000	42.91	3.68	46.59	74.00	-27.41	H	Peak
6250.0000	41.16	7.47	48.63	74.00	-25.37	H	Peak
7435.0000	47.72	7.41	55.13	74.00	-18.87	H	Peak
7435.0000	35.11	7.41	42.52	54.00	-11.48	H	AVG
9040.0000	41.17	8.48	49.65	74.00	-24.35	H	Peak

REMARKS:

1. *Measuring frequencies from 1 GHz to the 10th harmonic of highest fundamental frequency.*
2. *Radiated emissions measured in frequency above 1000MHz were made with an instrument using peak/average detector mode.*
3. *Average test would be performed if the peak result were greater than the average limit or as required by the applicant.*
4. *Data of measurement within this frequency range shown " --- " in the table above means the reading of emissions are attenuated more than 20dB below the permissible limits or the field strength is too small to be measured.*
5. *Measurements above show only up to 6 maximum emissions noted, or would be lesser, with " N/A " remark, if no specific emissions from the EUT are recorded (ie: margin>20dB from the applicable limit) and considered that's already beyond the background noise floor.*
6. *Margin (dB) = Remark result (dBuV/m) – Average limit (dBuV/m).*

This report shall not be reproduced except in full, without the written approval of Compliance Certification Services.

7.3. 6dB BANDWIDTH MEASUREMENT

7.3.1. LIMITS

According to §15.247(a)(2), systems using digital modulation techniques may operate in the 902 - 928 MHz, 2400 - 2483.5 MHz, and 5725 - 5850 MHz bands. The minimum 6 dB bandwidth shall be at least 500 kHz.

7.3.2. TEST INSTRUMENTS

Name of Equipment	Manufacturer	Model	Serial Number	Last Calibration	Calibration Due
Spectrum Analyzer	Agilent	E4446A	US44300399	03/01/2014	03/01/2015

7.3.3. TEST PROCEDURES (please refer to measurement standard)

1. Place the EUT on the table and set it in the transmitting mode.
2. Remove the antenna from the EUT and then connect a low loss RF cable from the antenna port to the spectrum analyzer.
3. Set the spectrum analyzer as RBW = 30kHz, VBW = 100kHz, Span = 3MHz, Sweep = auto.
4. Mark the peak frequency and –6dB (upper and lower) frequency.
5. Repeat until all the rest channels are investigated.

7.3.4. TEST SETUP

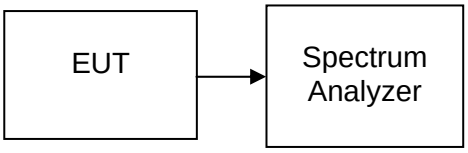

7.3.5. TEST RESULTS

No non-compliance noted

Test Data

Channel	Frequency (MHz)	Bandwidth (kHz)	Limit (kHz)	Margin (kHz)
Low	2402	701.778	>500	PASS
Mid	2442	697.110		PASS
High	2480	701.684		PASS

This report shall not be reproduced except in full, without the written approval of Compliance Certification Services.

Test Plot

6dB Bandwidth (CH Low)

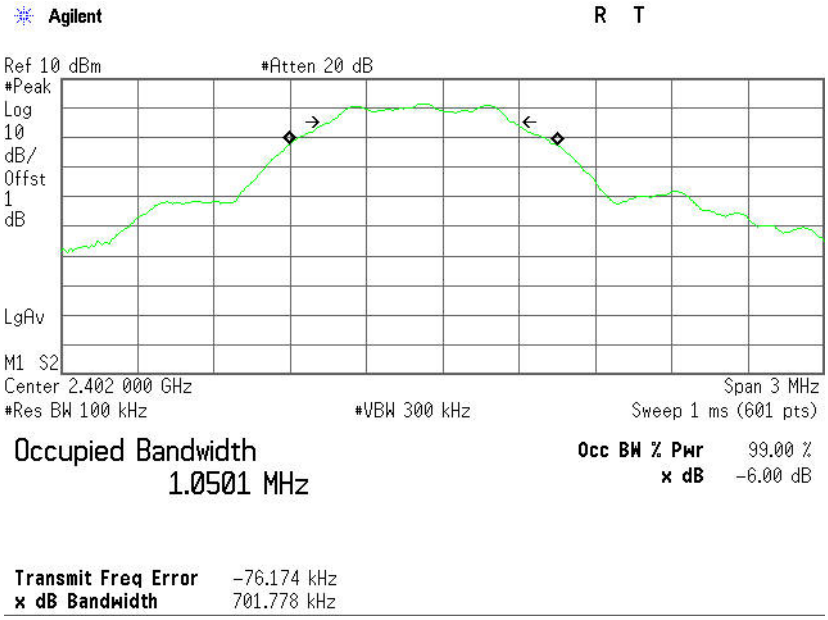

6dB Bandwidth (CH Mid)

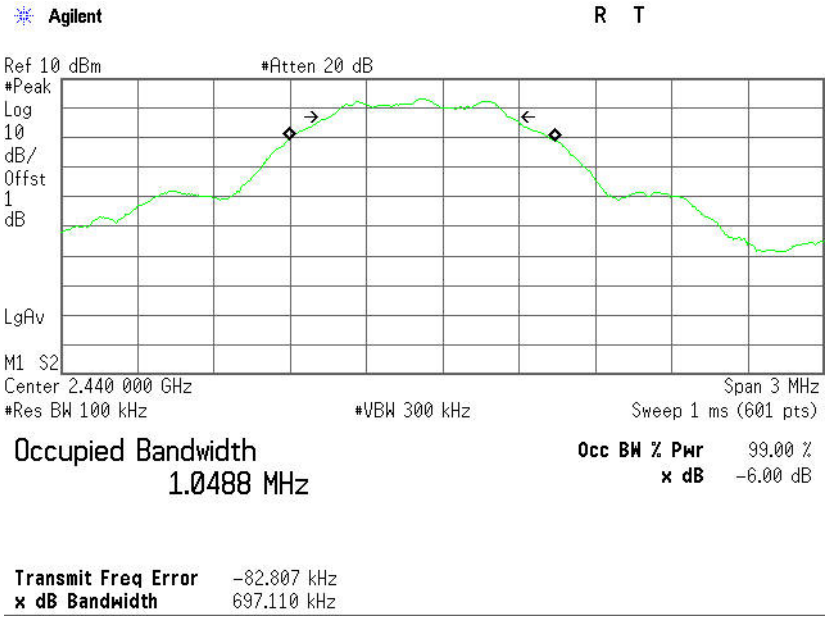

This report shall not be reproduced except in full, without the written approval of Compliance Certification Services.

6dB Bandwidth (CH High)

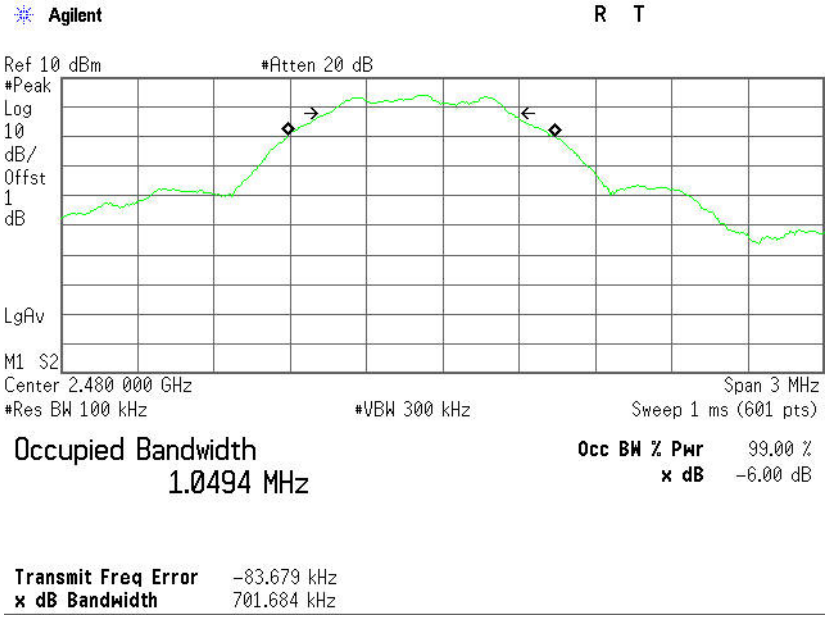

This report shall not be reproduced except in full, without the written approval of Compliance Certification Services.

7.4. PEAK OUTPUT POWER

7.4.1. LIMITS

The maximum peak output power of the intentional radiator shall not exceed the following:

1. According to §15.247(b)(3), for systems using digital modulation in the bands of 902-928 MHz, 2400-2483.5 MHz, and 5725-5850 MHz: 1 Watt.
2. According to §15.247(b)(4), the conducted output power limit specified in paragraph (b) of this section is based on the use of antennas with directional gains that do not exceed 6 dBi. Except as shown in paragraph (c) of this section, if transmitting antennas of directional gain greater than 6 dBi are used, the conducted output power from the intentional radiator shall be reduced below the stated values in paragraphs (b)(1), (b)(2), and (b)(3) of this section, as appropriate, by the amount in dB that the directional gain of the antenna exceeds 6 dBi.

7.4.2. TEST INSTRUMENTS

Name of Equipment	Manufacturer	Model	Serial Number	Last Calibration	Calibration Due
Spectrum Analyzer	Agilent	E4446A	US44300399	03/01/2014	03/01/2015
Power Meter	Anritsu	ML2495A	1204003	03/01/2014	03/01/2015
Power Sensor	Anritsu	MA2411B	1126150	03/01/2014	03/01/2015

7.4.3. TEST PROCEDURES (please refer to measurement standard)

This procedure shall be used when the measurement instrument has available a resolution bandwidth that is greater than the DTS bandwidth.

1. Set the RBW ⩾ DTS bandwidth.
2. Set VBW ⩾ 3 RBW.
3. Set span ⩾ 3 x RBW
4. Sweep time = auto couple.
5. Detector = peak.
6. Trace mode = max hold.
7. Allow trace to fully stabilize.
8. Use peak marker function to determine the peak amplitude level.

7.4.4. TEST SETUP

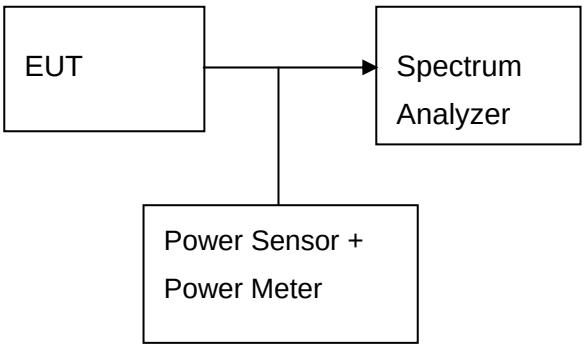

This report shall not be reproduced except in full, without the written approval of Compliance Certification Services.

7.4.5. TEST RESULTS

No non-compliance noted

Test Data

Channel	Frequency (MHz)	Output Power (dBm)	Output Power (W)	Limit (W)	Result
Low	2402	1.45	0.00140	1	PASS
Mid	2440	3.08	0.00203		PASS
High	2480	4.11	0.00258		PASS

This report shall not be reproduced except in full, without the written approval of Compliance Certification Services.

7.5. BAND EDGES MEASUREMENT

7.5.1. LIMITS

According to §15.247(d), in any 100 kHz bandwidth outside the frequency bands in which the spread spectrum intentional radiator in operating, the radio frequency power that is produced by the intentional radiator shall be at least 20 dB below that in the 100 kHz bandwidth within the band that contains the highest level of the desired power, based on either an RF conducted or a radiated measurement, provided the transmitter demonstrates compliance with the peak conducted power limits. In addition, radiated emissions which fall in the restricted bands, as defined in §15.205(a), must also comply with the radiated emission limits specified in 15.209(a) (see Section 15.205(c)).

7.5.2. TEST INSTRUMENTS

Radiated Emission Test Site 966（2）					
Name of Equipment	**Manufacturer**	**Model Number**	**Serial Number**	**Last Calibration**	**Due Calibration**
PSA Series Spectrum Analyzer	Agilent	E4446A	US44300399	03/01/2014	03/01/2015
EMI TEST RECEIVER	ROHDE&SCHWARZ	ESCI	100783	03/09/2014	03/08/2015
Amplifier	MITEQ	AM-1604-3000	1123808	03/18/2014	03/18/2015
High Noise Amplifier	Agilent	8449B	3008A01838	03/18/2014	03/18/2015
Bilog Antenna	SCHAFFNER	CBL6143	5082	03/01/2014	03/01/2015
Horn Antenna	SCHWARZBECK	BBHA9120	D286	03/01/2014	03/01/2015
Board-Band Horn Antenna	SCHWARZBECK	BBHA9170	9170-497	07/10/2013	07/09/2014
Loop Antenna	A、R、A	PLA-1030/B	1029	03/19/2014	03/18/2015
Turn Table	N/A	N/A	N/A	N.C.R	N.C.R
Controller	Sunol Sciences	SC104V	022310-1	N.C.R	N.C.R
Controller	CT	N/A	N/A	N.C.R	N.C.R
Temp. / Humidity Meter	Anymetre	JR913	N/A	02/28/2014	02/28/2015
Antenna Tower	SUNOL	TLT2	N/A	N.C.R	N.C.R
Test S/W	FARAD	LZ-RF / CCS-SZ-3A2			

NOTE: 1. The calibration interval of the above test instruments is 12 months and the calibrations are traceable to NML/ROC and NIST/USA.

2. The FCC Site Registration number is 101879.

3. N.C.R = No Calibration Required.

This report shall not be reproduced except in full, without the written approval of Compliance Certification Services.

7.5.3. TEST PROCEDURES (please refer to measurement standard)

1. The EUT is placed on a turntable, which is 0.8m above the ground plane.
2. The turntable shall be rotated for 360 degrees to determine the position of maximum emission level.
3. EUT is set 3m away from the receiving antenna, which is varied from 1m to 4m to find out the highest emission.
4. Set the spectrum analyzer in the following setting in order to capture the lower and upper band-edges of the emission:
   (a) PEAK: RBW=VBW=1MHz / Sweep=AUTO
   (b) AVERAGE: RBW=1MHz / VBW=2.2kHz / Sweep=AUTO
5. Repeat the procedures until all the PEAK and AVERAGE versus POLARIZATION are

7.5.4. TEST SETUP

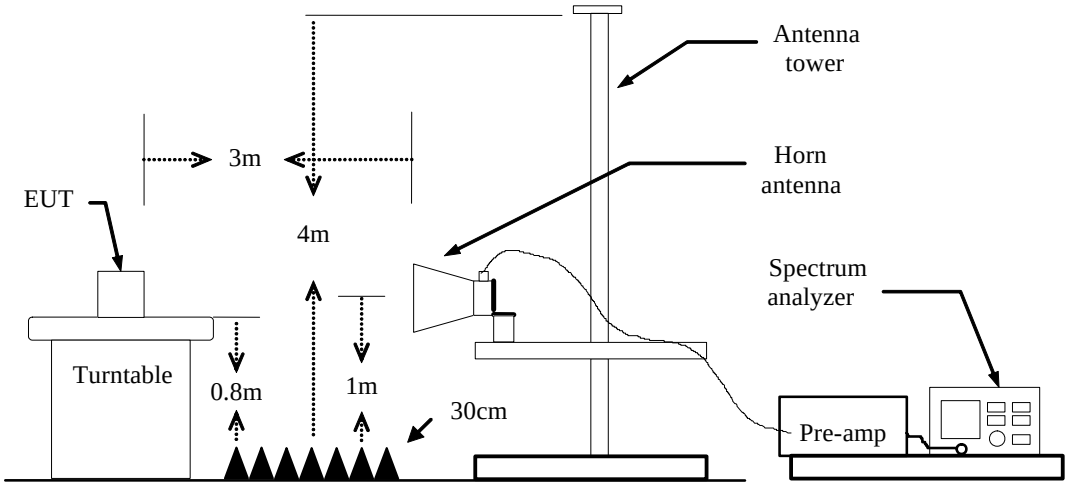

This report shall not be reproduced except in full, without the written approval of Compliance Certification Services.

7.5.5. TEST RESULTS

Test Plot

Band Edges (CH Low)

Detector mode: Peak **Polarity: Vertical**

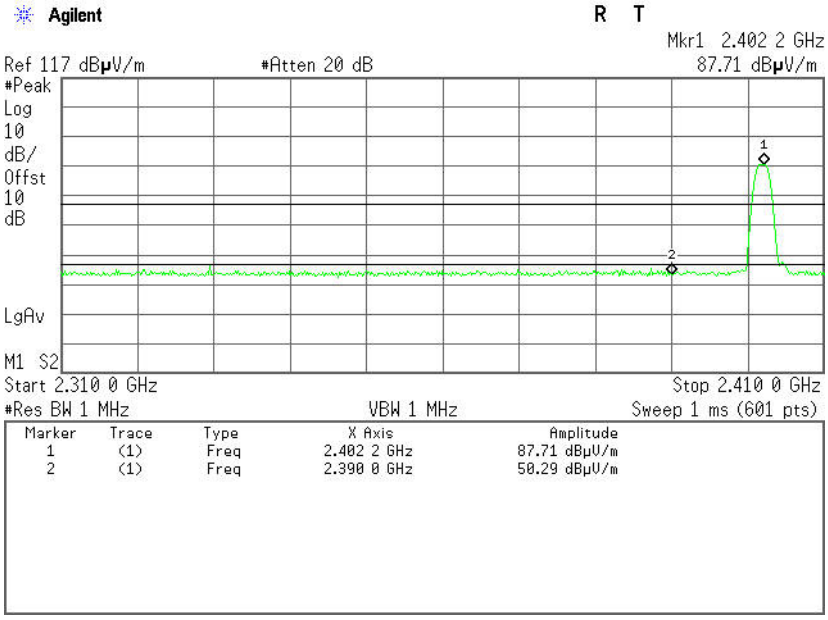

Detector mode: Average **Polarity: Vertical**

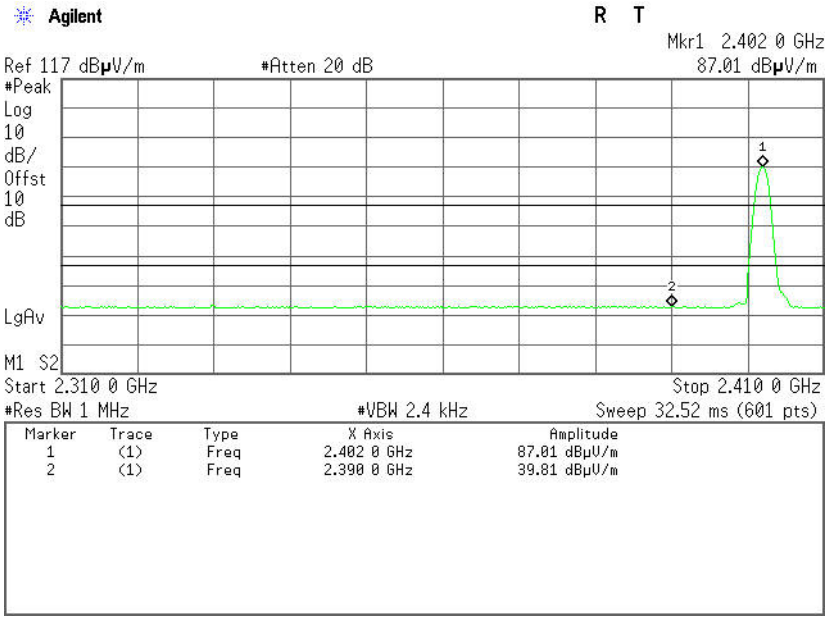

This report shall not be reproduced except in full, without the written approval of Compliance Certification Services.

Detector mode: Peak **Polarity: Horizontal**

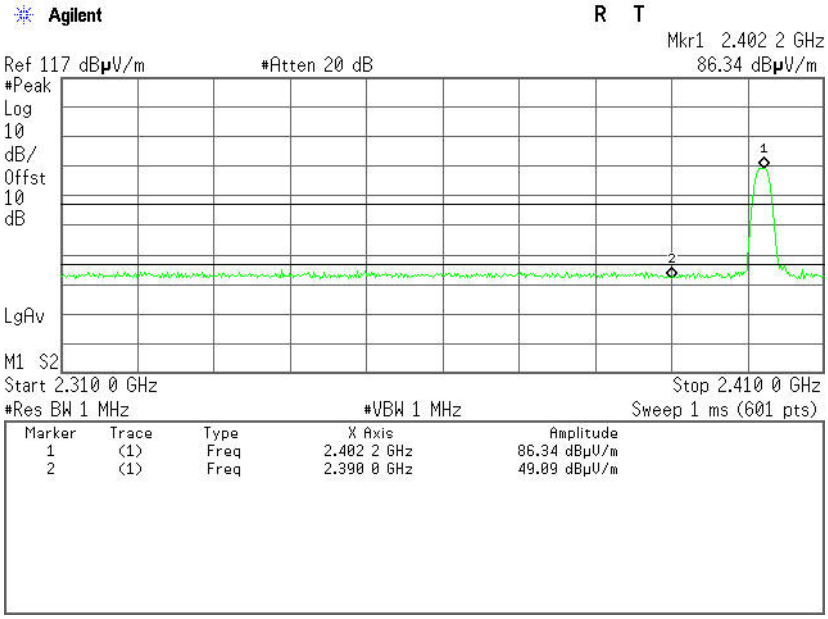

Detector mode: Average **Polarity: Horizontal**

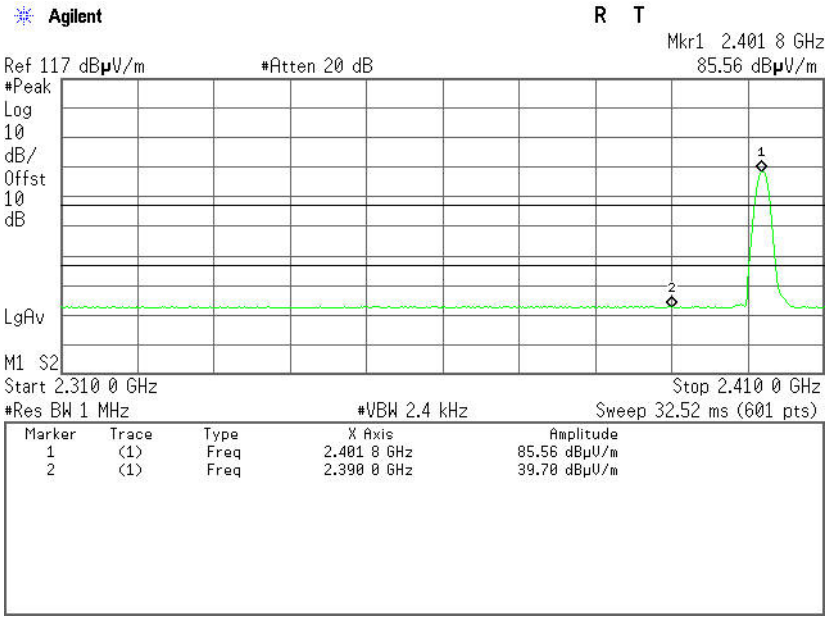

This report shall not be reproduced except in full, without the written approval of Compliance Certification Services.

Band Edges (CH High)

Detector mode: Peak Polarity: Vertical

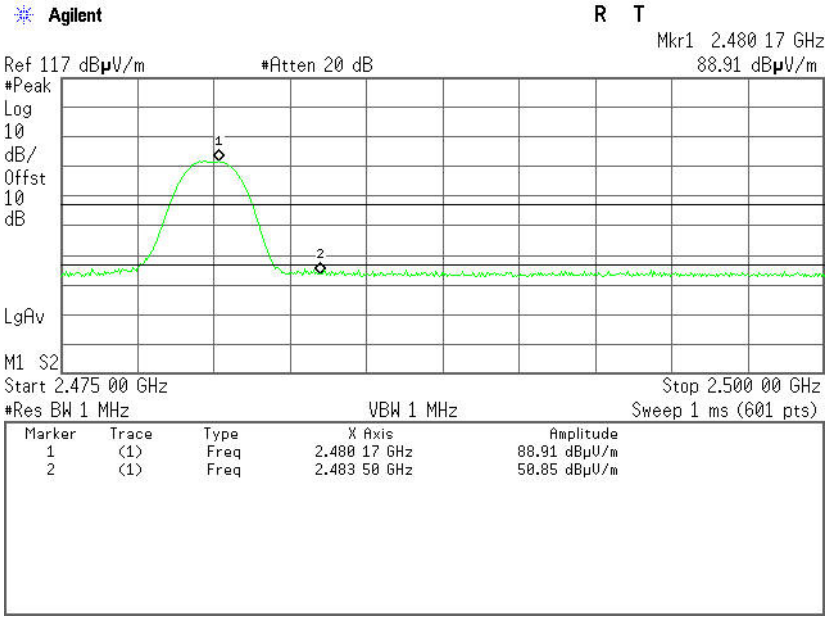

Detector mode: Average Polarity: Vertical

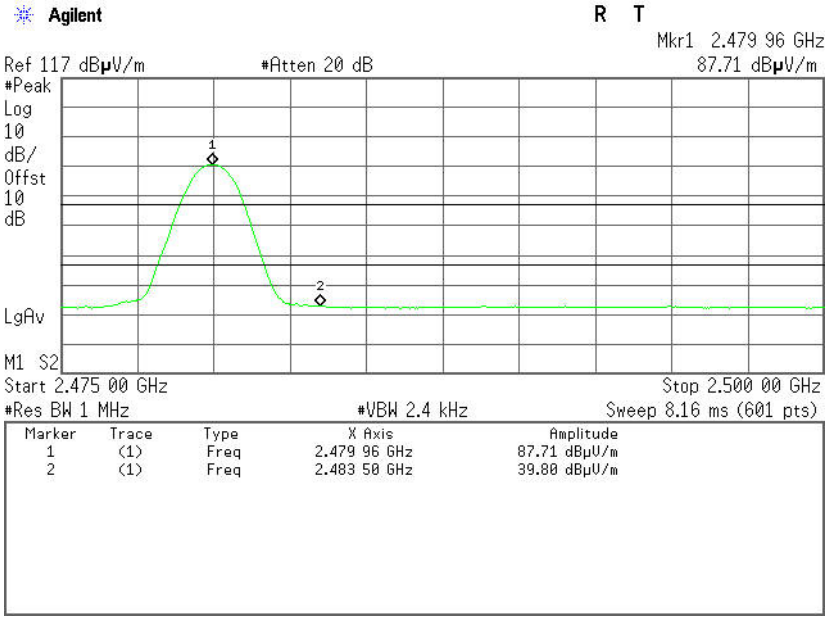

This report shall not be reproduced except in full, without the written approval of Compliance Certification Services.

Detector mode: Peak **Polarity: Horizontal**

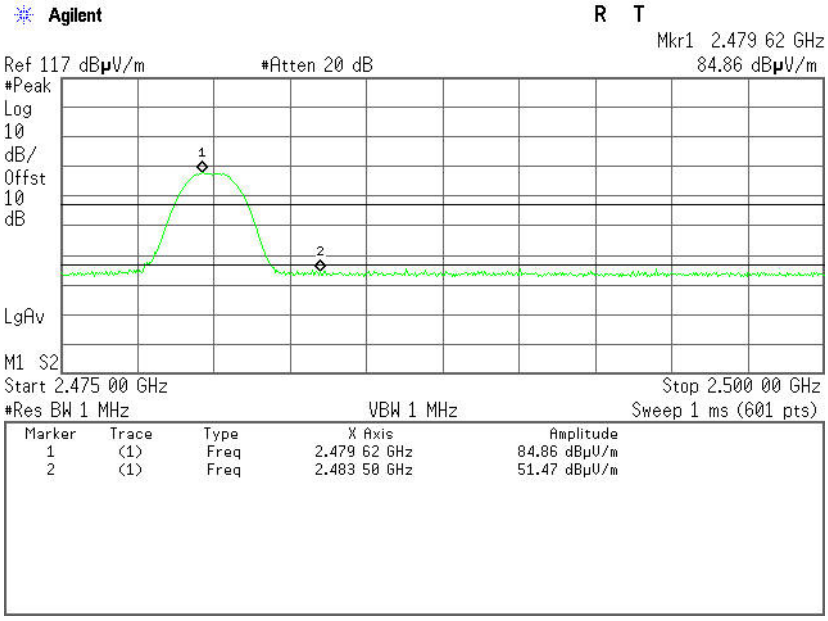

Detector mode: Average **Polarity: Horizontal**

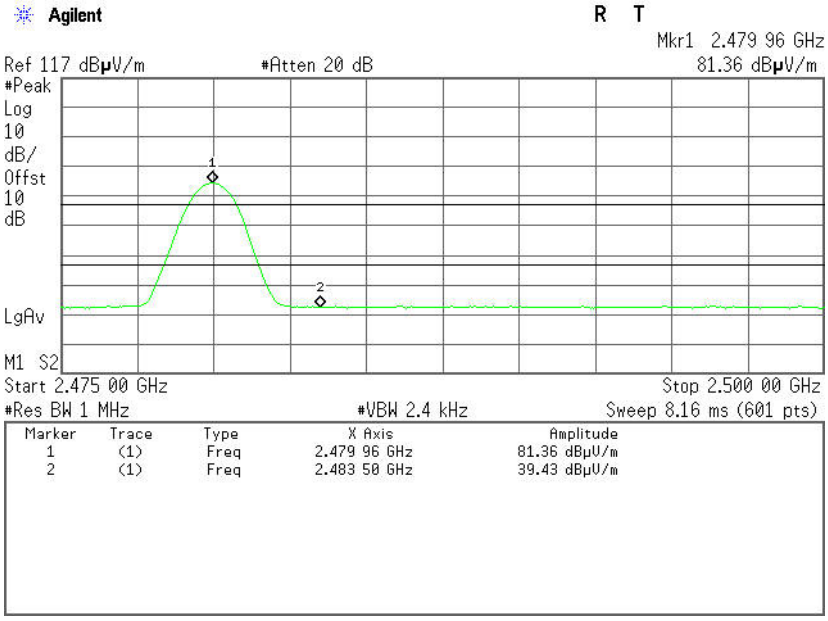

This report shall not be reproduced except in full, without the written approval of Compliance Certification Services.

7.6. PEAK POWER SPECTRAL DENSITY MEASUREMENT

7.6.1. LIMITS

According to §15.247(e), for digitally modulated systems, the power spectral density conducted from the intentional radiator to the antenna shall not be greater than 8 dBm in any 3 kHz band during any time interval of continuous transmission.

According to §15.247(f), the digital modulation operation of the hybrid system, with the frequency hopping turned off, shall comply with the power density requirements of paragraph (d) of this section.

7.6.2. TEST INSTRUMENTS

Name of Equipment	Manufacturer	Model	Serial Number	Last Calibration	Calibration Due
Spectrum Analyzer	Agilent	E4446A	US44300399	03/01/2014	03/01/2015

7.6.3. TEST PROCEDURES (please refer to measurement standard)

1. Set analyzer center frequency to DTS channel center frequency.
2. Set the span to 1.5 times the DTS bandwidth.
3. Set the RBW to: 3 kHz ⩽ RBW ⩽ 100 kHz.
4. Set the VBW ⩾ 3 RBW.
5. Detector = peak.
6. Sweep time = auto couple.
7. Trace mode = max hold.
8. Allow trace to fully stabilize.
9. Use the peak marker function to determine the maximum amplitude level within the RBW.
10. If measured value exceeds limit, reduce RBW (no less than 3 kHz) and repeat.

7.6.4. TEST SETUP

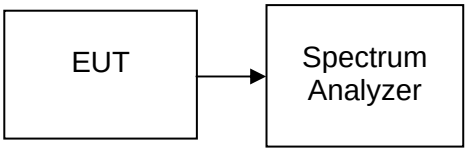

This report shall not be reproduced except in full, without the written approval of Compliance Certification Services.

7.6.5. TEST RESULTS

No non-compliance noted

Test Data

Channel	Frequency (MHz)	PPSD (dBm)	Limit (dBm)	Test Result
Low	2402	-13.92	8.00	PASS
Mid	2440	-12.16		PASS
High	2480	-10.98		PASS

This report shall not be reproduced except in full, without the written approval of Compliance Certification Services.

Test Plot

PPSD (CH Low)

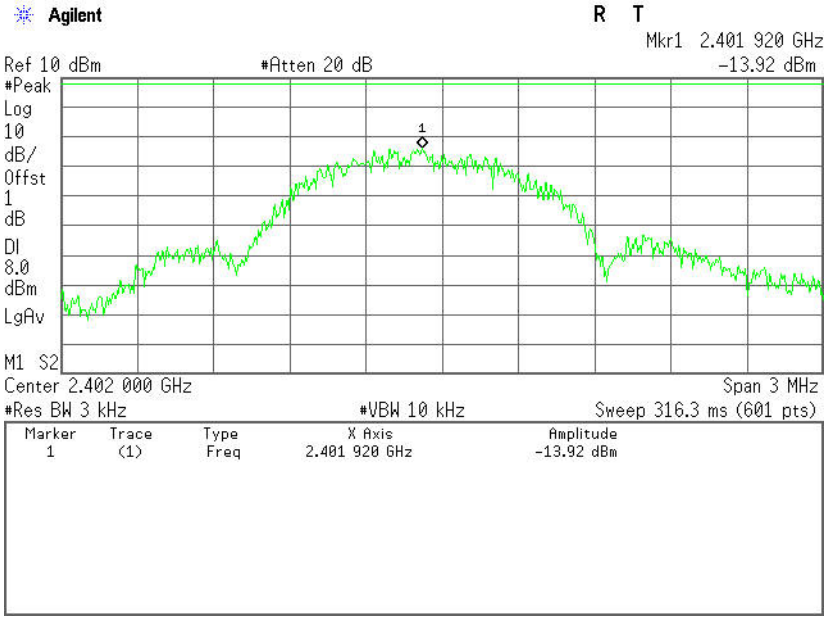

PPSD (CH Mid)

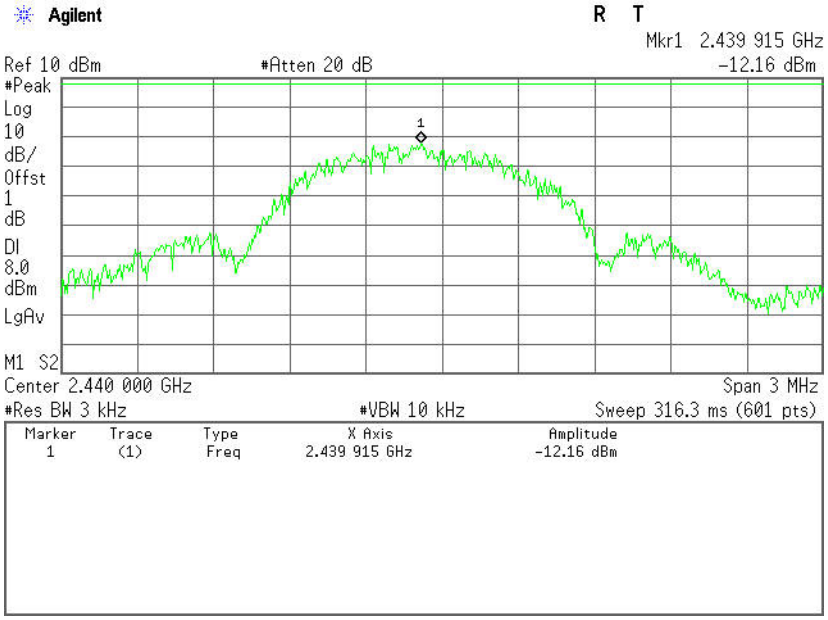

This report shall not be reproduced except in full, without the written approval of Compliance Certification Services.

PPSD (CH High)

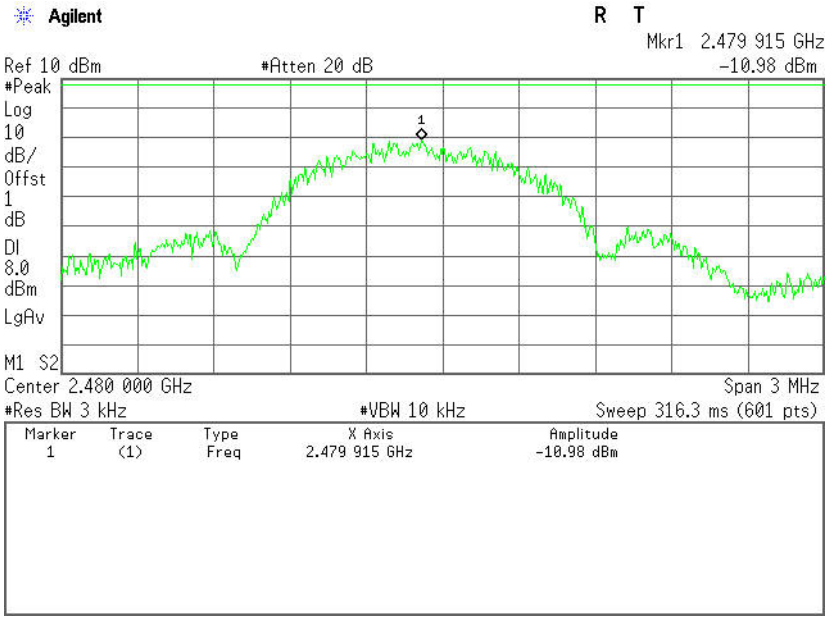

This report shall not be reproduced except in full, without the written approval of Compliance Certification Services.