LED COLOR TV

Operating Instruction

Model:IQ32

Please read these instructions before operating your set and retain them for future reference.

NAXAZX-E100

IMPORTANT SAFETY INSTRUCTIONS

1. **Read these instructions – All the safety and operating instructions should be read before this product is operated.**
2. **Keep these instructions – The safety and operating instructions should be retained for future reference.**
3. **Heed all warnings – All warnings on the appliance and in the operating instructions should be adhered to.**
4. **Follow all instructions – All operating and use instructions should be followed.**
5. **Do not use this apparatus near water – The appliance should not be used near water or moisture – for example, in a wet basement or near a swimming pool, and the like.**
6. **Clean only with dry cloth.**
7. **Do not block any ventilation openings. Install in accordance with the manufacture's instructions.**
8. **Do not install near any heat sources such as radiators, heat registers, stoves, or other apparatus (including amplifiers) that produce heat.**
9. **Do not defeat the safety purpose of the polarized or grounding plug. A polarized plug has two blades with one wider than the other. A grounding plug has two blades and a third grounding prong. The wide blade or the third prong is provided for your safety. If the provided plug does not fit into your outlet, consult an electrician for replacement of the obsolete outlet.**
10. **Protect the power cord from being walked on or pinched particularly at the plugs, convenience receptacles, and at the point where they exit from the apparatus.**
11. **Only use attachments/accessories specified by the manufacturer.**
12. **Use only with the cart, stand, tripod, bracket, or table specified by the manufacturer, or sold with the apparatus. When a cart or rack is used, use caution when moving the cart/apparatus combination to avoid injury from tip-over.**

13. **Unplug the apparatus during lightning storms or when unused for long periods of time.**
14. **Refer all servicing to qualified personnel. Servicing is required when the apparatus has been damaged in any way, such as power supply cord or plug is damaged, liquid has been spilled or objects have fallen into the apparatus has been exposed to rain or moisture, does not operate normally, or has been dropped.**
15. **CAUTION: These servicing instructions are for use by qualified service personnel only. To reduce the risk of electric shock, do not perform any servicing other than that contained in the operating instructions unless you are qualified to do so.**
16. Do not install this equipment in a confined or building-in space such as a book case or similar unit, and remain a well ventilation conditions at open site. The ventilation should not be impeded by covering the ventilation openings with items such as newspaper, table-cloths, curtains etc.
17. WARNING：To reduce the risk of fire or electric shock, do not expose this apparatus to rain or moisture. The apparatus shall not be exposed to dripping or splashing and that objects filled with liquids, such as vases, shall not be placed on apparatus.

18. WARNING: The battery (battery or batteries or battery pack) shall not be exposed to excessive heat such as sunshine, fire or the like.
19. WARNING: The mains plug is used as disconnect device, the disconnect device shall remain readily operable.
20. **This equipment is a Class II or double insulated electrical appliance. It has been designed in such a way that it does not require a safety connection to electrical earth.**
21.

- This lightning flash with arrowhead symbol within an equilateral triangle is intended to alert the user to the presence of non-insulated “dangerous voltage” within the product’s enclosure that may be of sufficient magnitude to constitute a risk of electric shock.

- Warning: To reduce the risk of electric shock, do not remove cover (or back) as there are no user-serviceable parts inside. Refer servicing to qualified personnel.

- The exclamation point within an equilateral triangle is intended to alert the user to the presence of important operating and maintenance instructions in the literature accompanying the appliance.

Warning: Changes or modifications to this unit not expressly approved by the party responsible for compliance could void the user's authority to operate the equipment.

NOTE: This equipment has been tested and found to comply with the limits for a Class B digital device, pursuant to Part 15 of the FCC Rules. These limits are designed to provide reasonable protection against harmful interference in a residential installation. This equipment generates, uses and can radiate radio frequency energy and, if not installed and used in accordance with the instructions, may cause harmful interference to radio communications.

However, there is no guarantee that interference will not occur in a particular installation. If this equipment does cause harmful interference to radio or television reception, which can be determined by turning the equipment off and on, the user is encouraged to try to correct the interference by one or more of the following measures:

- **Reorient or relocate the receiving antenna.**
- **Increase the separation between the equipment and receiver.**
- **Connect the equipment into an outlet on a circuit different from that to which the receiver is connected.**
- **Consult the dealer or an experienced radio/TV technician for help.**

Note：If the manual is inconsistent with the product,please refer to the actual product.

CONTENTS

1. Connection and Preparation of TV..... 2
1.1 Accessories 2
1.2 Installation of Stand..... 2
1.3 Keys and Interfaces..... 3
1.4 Remote Control..... 4
1.5 Installation of Batteries..... 5
2. Basic Operation..... 5
2.1 Power ON/OFF(Optional) 5
2.2 Setting of Standby Mode..... 5
2.3 Selection of Input Mode..... 5
2.4 Menu Option Adjustment..... 6
2.5 Setup Wizard 7
2.6 SELECT INPUT SOURCE.....8
2.6.1 Main Menu..... 8
2.7 Main Menu Operution..... 9
2.7.1 Picture Menu..... 9
2.7.2 Sound Menu.....11
2.7.3 Time Menu.....12
2.7.4 Setup Menu.....13
2.7.5 Lock Menu.....16
2.7.6 Channel Menu.....17
2.7.7 PC Menu.....18
2.8 Media OPERATION.....19
2.8.1 Photo Menu.....20
2.8.2 Music Menu.....21
2.8.3 Movie Menu.....22
3. Technical Speciication..... 23
4. Supported Signal Modes..... 24
5. Simple Troubleshooting 25

1. Connection and Preparation of TV

1.1 Accessories

- ✶ User Manual
- ✶ Remote Control
- ✶ Battery(UM-4/R03P/AAA)
- ✶ Wall Mount Kit (Pre-assembled)(Optional)

1.2 Installation of Stand

(For the physical structure, please refer to the real object)

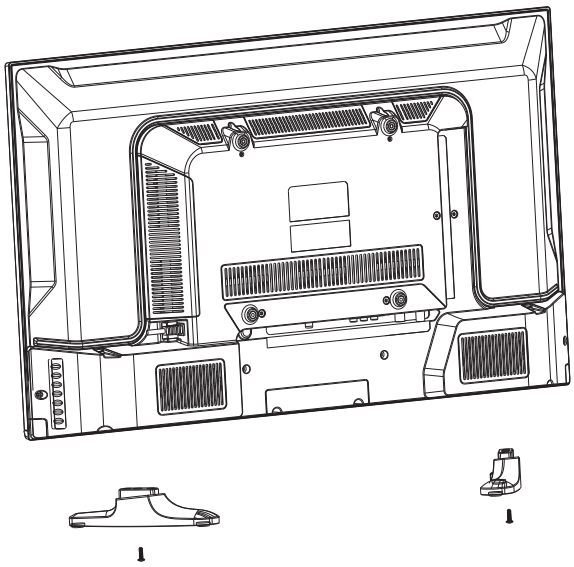

① Place the TV with the front panel facing downwards on the soft cloth or soft pads on a desk.

② Insert the stand into the bottom socket of the TV.

③ Insert the screws into the sockets and tighten them.

1.3 Keys and Interfaces

The design and specification takes actual products as the standard

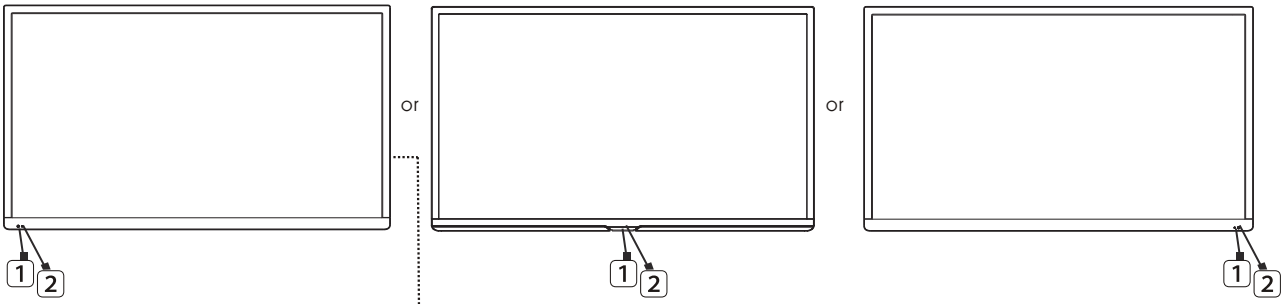

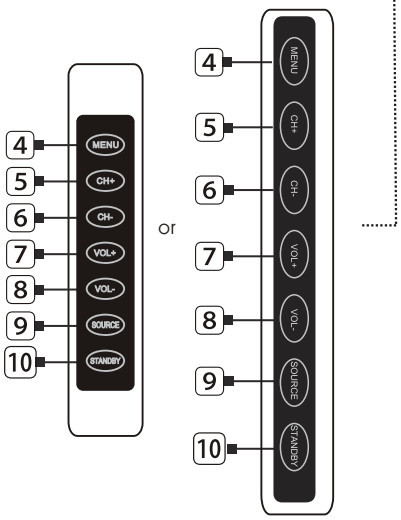

1. Remote sensor window
2. Power indicator
3. Speaker
4. Menu key
5. Program “+” key
6. Program “-” key
7. Volume “+” key
8. Volume “-” key
9. Source key
10. Standby key
11. Power plug input
12. EARPHONE output
13. COAXIAL
14. AV input
15. YPbPr input
16. HDMI1
17. HDMI2
18. HDMI3
19. PC(VGA) input
20. PC AUDIO input
21. RF in
22. USB

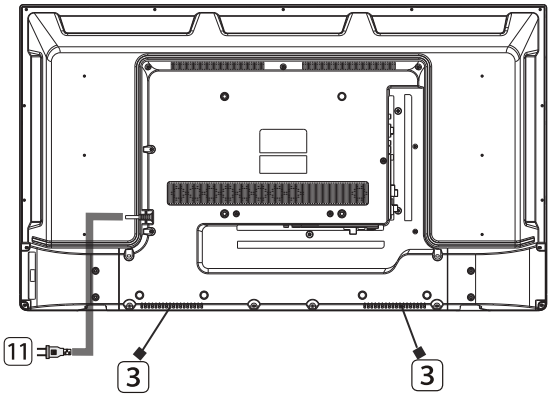

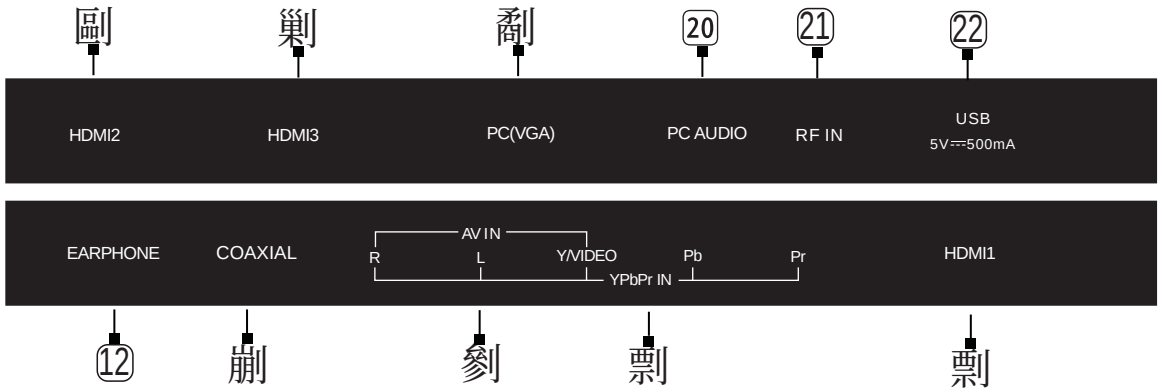

1.4 Remote Control

(Here is only the sketch, please in kind prevail)

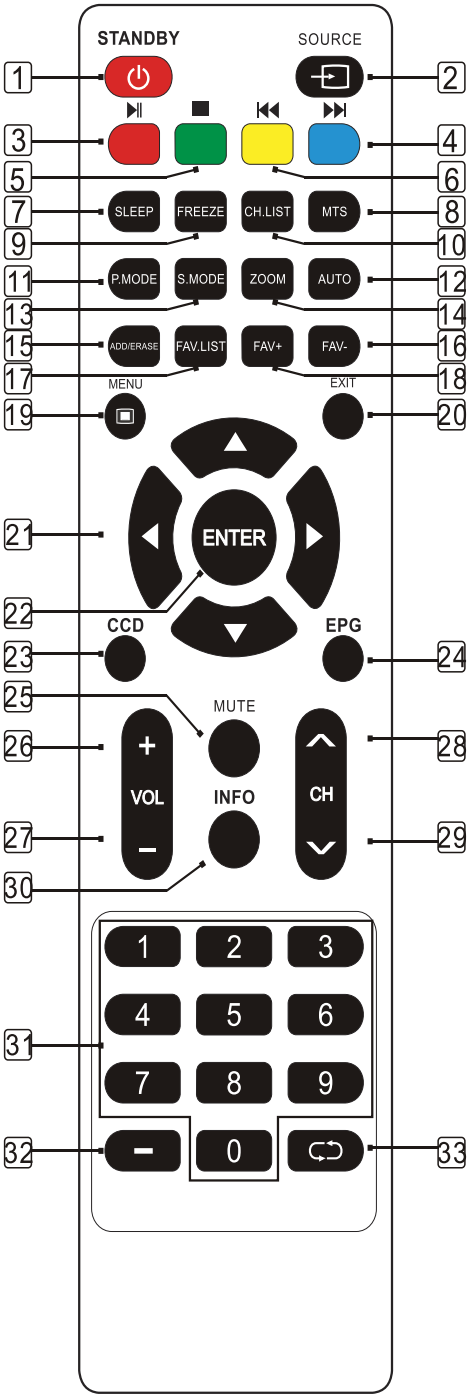

1. STANBY: Standby turn on and off.
2. SOURCE: Select the signal source.
3. ⏯Press one time to pause,press again to playback.
4. ⏭Next.
5. ■Stop the playback and return to file list.
6. ⏮ Previous.
7. SLEEP: Enactment time of power off.
8. MTS:Change the MTS mode.
9. FREEZE: Freeze the picture.
10. CH LIST: Channel list
11. P.MODE: Select the picture mode.
12. AUTO: Adjust picture only for VGA.
13. S.MODE: Select the sound mode.
14. ZOOM: Zoom in or out the current
15. ADD/ ERASE:Add current channel to favorite list or delete ot.
16. FAV-:Select the favorite channel forward.
17. FAV.LIST: Favorite channel list
18. FAV+:Select the favorite channel backward.
19. MENU: Enter or exit menu.
20. EXIT: Exit current setting and clear menu.
21. ▲,▼,◀,▶ key: The menu item selection.
22. ENTER: Confirm or enter.
23. CCD:Change the CCD mode ;
24. EPG:Enter or exit EPG(Electronic Program .Guide) random, shuffle and folder.
25. MUTE: Mute sound.
26. VOL+: Increase the volume.
27. VOL-: Decrease the volume.
28. CH∧: Select the channel forward.
29. CH∨: Select the channel backward.
30. INFO:Display
31. 0~9: Continue to press the keys to select a channel.
32. ▬ :Dot button and minor channel number.Enter to confirm.
33. RECALL: Return to previous channel.

1.5 Installation of Batteries

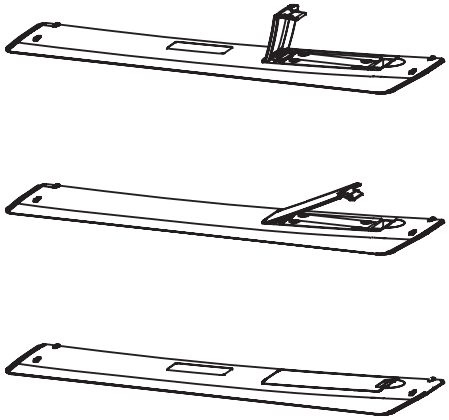

1. Open the back lid of the remote control.
2. Install two 7#(AAA)1.5V batteries.
   Ensure the correct polarity of the batteries.
3. Cover the back lid.
   Please take out of the batteries from the remote control for long time of no use.

If the remote control doesn't work properly, please carry out the following checks.

- Check the TV is turned on.
- Check the polarity of the batteries are correct.
- Check the batteries are not drained.
- Check the power supply is normal or the power cord is correctly connected.
- Check there are no special fluorescent light or neon light around.

2. Basic Operation

2.1 Power ON/OFF(Optional)

- Connect the power cord to the **AC input**. Insert the power cord into the appropriate socket.
- Press the **Power switch** to switch on the TV, then press **Power** button to turn on the unit.
- Press the **Power switch** again to switch off the TV.

Note: After switch off the TV, please don’t immediately re-open the power switch ,should be delayed one minute more to re-open the power switch.

2.2 Setting of Standby Mode

- Press (⏻) button to turn on the unit.
- Press (⏻) button again to return the display to standby mode. The power indicator turns red.
- Be sure not to set your TV in standby mode for a long period of time.

2.3 Selection of Input Mode

This set has different signal source modes, you may continue to press the **Source** button to select a signal source.

When selecting the signal source, the screen will display the information.

TV mode

6-0

When there is no signal from the selected source, the warning message will be displayed as per illustration. Either change the channel in TV mode or press **Source** button to change source.

No Signal

2.4 Menu Option Adjustment

After you have installed the batteries into the remote control, you will need to set some preferences on the L DTV, using the menu system.

- The buttons for menu option adjustment include: **Menu,** ▲ , ▼ , ◀ , ▶ **Enter** buttons.
- Press the **Menu** button to open the OSD Menu, then press ◀ , ▶ button to select the pages. The pages are displayed in the following sequence (circular display):

→ Picture → Sound → Time → Setup → Lock → Channel

Note: " CHANNEL " is only for TV .

1. Press the **Menu** button to display the menu system.
2. Press ◀ , ▶ button to select the menu pages.
3. Press ▲ , ▼ button to select an item.
4. Press ◀ , ▶ button to select or adjust a setting.
5. If you do not make a selection within 30 seconds, the menu will close automatically.
6. Press the **Menu** button to return or exit OSD menu.

2.5 Setup Wizard

Connect an RF cable from the Tv's input called "RF-In" and to your TV Aerial socket.

Select Language

Press ◄ / ► button on the remote control to select the language to be used for menus and message.

Press ▼ / ▲ button on the remote control to select go to next step and press **ENTER/►** button to go.

Select Time

Press ▼ / ▲ button on the remote control to select the time zone, daylight saving time and time format you want to.

Press ◄ / ► button on the remote control to adjust.

Press ▼ / ▲ button on the remote control to select go to next step and press **ENTER/►** button to go.

Auto Scan

Press ◄ / ► button on the remote control to select the antenna type.

Press ▼ / ▲ button on the remote control to select go to next step and press **ENTER/►** button to start auto scan.

2.6 SELECT INPUT SOURCE

Press **SOURCE** button to display the input source list,

Press ▼ / ▲ or **SOURCE** button to select the input source you want to,

Press **ENTER** button to enter the input source,

Press **EXIT** button to quit.

2.6.1 Main Menu

Press MENU to display the main menu or return to the previous menu or close the main menu.
Press ◄/► to highlight the desired menu icon, and press ENTER to select.

If no buttons are pressed, the menu will close automatically after about 30 seconds.

2.7 Main Menu Operation

2.7.1 Picture Menu

Press **MENU** to enter the main menu, Press ◀ / ▶ button to select.
Press **ENTER** / ▼ to enter.
Press **MENU** again to exit or back to parent menu.

Press ▼ / ▲ button to select among Picture Mode /Brightness/ Contrast / Color / Tint / Sharpness / Color Temperature/ Advanced Settings.
Press **ENTER** / ▼ to enter.
Press ◀ / ▶ button to adjust.
Press **MENU** again or back to parent menu.

【Picture Mode】
Adjust picture mode to change picture appearance.
Press ◀ / ▶ button to select(Standard / Dynamic / Soft / User).
Note:The brightness,contrast,color, tint and sharpness are only available in **User** mode,you can adjust as you like.

Standard	Produces a highly defined image in a normally lit room.
Dynamic	Produces a highly defined image in a brightly lit room.
Soft	Produces a highly defined image in a soft lit room.
User	Select to customize picture settings.

【Brightness】
Adjust the visual perception output of the entire picture, it will effect the iuminousness of the picture.
Press ◀ / ▶ button to adjust.

【Contrast】
Adjust the highlight intensity of the picture, but the shadow of the picture is invariable.
Press ◀ / ▶ button to adjust.

【Color】
Adjust the saturation of the color based on your own like.
Press ◀ / ▶ button to adjust.

【Tint】
Adjust the hue(Red,Green,Blue) of the picture.
Press ◀ / ▶ button to adjust.

【Sharpness】
Adjust the peaking in the detail of the picture.
Press ◀ / ▶ button to adjust.

【Color Temperature】
Increase or reduce warm color of the picture personally(red),and the cool color personally(blue) according to your like.

Normal	Increase the sex-linked colors for the white.
Warm	Increase the red color for the white.
Cool	Increase the blue tone for the white.

【Advanced Settings】
Adjust advanced video features to fine tune the picture.
Press ▶ button to enter sub-menu..

【Aspect Ratio】
Adjust how the picture fills the screen.

Normal	Automatically adjust Aspect Ratio based on TV size and TV program.
Wide	Use to watch wide screen(16:9) content.
Zoom	Expands image to fill screen. Top and button maybe cut off.
Cinema	Stretches image at edges but keeps a clear image in the center.

【Noise Reduction】
Set options to reduce video noise.

Off	Select to turn off video noise detection.
Low	Detect and reduce low video noise.
Medium	Detect and reduce moderate video noise.
High	Detect and reduce enhanced video noise.
Auto	Detect and reduce video noise automatically.

【Dynamic Contrast】
Automatically adjust picture detail and brightness.
Press ◀ / ▶ button to select (Off/On).

【HDMI Mode】
Only available in HDMI input.
Press ◀ / ▶ button to select (Video/Graphic).

2.7.2 Sound Menu

Press **MENU** to enter the main menu, Press ◄ / ► button to select.
Press **ENTER** / ▼ to enter.
Press **MENU** again to exit or back to parent menu.

Press ▼ / ▲ button to select among sound mode/ Bass / Treble / Balance /MTS/ Audio Language /Digital Audio Output/ Sorround Sound / AVL / speaker

Press **ENTER** / ▼ to enter.
Press ◄ / ► button to adjust.
Press **MENU** again or back to parent menu.

【Sound Mode】

Select a sound mode to achieve ideal sound.
Press ◄ / ► button to select(Standard / Music / Movie / Sports / User).
Note:The bass and treble are only available in **User** mode,you can adjust as you like.

Standard	Produces a balanced sound in all environments.
Music	Preserves the original sound. Good for musical programs.
Movie	Enhances treble and bass for a rich sound experience.
Sports	Enhances vocals for TV audio.
User	Select to customize audio settings.

【Bass】

Adjust the bass effect.Increases or decreases lower-pitched sounds.
Press ◄ / ► button to adjust.

【Treble】

Adjust the treble effect.Increases or decreases high-pitched sounds.
Press ◄ / ► button to adjust.

【Balance】

Adjust the balance between left and right speakers to adapt to your listening position.
Press ◄ / ► button to adjust.

【MTS】

Configures the multi-track sound. It is only available in ATV.
Press ◄ / ► button to select(Mono/Stereo/SAP).

Mono	Sets the sound to mono.
Stereo	Sets the sound to stereo when stereo is not available, the sound is automatically switched to mono.
SAP	Sets the sound to the second audio program.

【Audio Language】

Select the language supported by the chosen digital channel. It is only available in DTV.
Press ◄ / ► button to select .

【Digital Audio Output】
Send digital audio to external audio system.
Press ◄ / ► button to select.

PCM	Select to output audio in 2-channel stereo
RAW	Original image coded date.
Off	Set digital audio output off.

【AVL】
Set the auto volume control.
Press ◄ / ► button to select(On / Off).

NOTE:
Balance: This item can adjust the speaker's output, it enables you to listen to best at your position.
AVL: This item uses for reducing the difference between channel and program's volume automatically.
it made the overall water to be even. This function will also reduce the fluctuation of the sound.

2.7.3 Time Menu

Press **MENU** to enter the main menu, Press ◄ / ► button to select.
Press **ENTER / ▼** to enter.
Press **MENU** again to exit or back to parent menu.

Press ▼ / ▲ button to select among Sleep Timer / Time Zone / Daylight Saving Time / Time Format / Auto Clock / Clock.
Press **ENTER / ▼** to enter.
Press ◄ / ► button to adjust.
Press **MENU** again or back to parent menu.

【Sleep Timer】
Set a timer for the TV to turn off automatically.
Press ◄ / ► button to select.

【Time Zone】
Select your time zone.
Press ◄ / ► button to select.

【Daylight Saving Time】
Set the daylight saving time for your area.
Press ◄ / ► button to select.

【Time Format】
Select your time format.
Press ◄ / ► button to select.

【Auto Clock】
Use to synchronize the display automatically.It is only available in DTV.
Press ◄ / ► button to select .

2.7.4 Setup Menu

Press **MENU** to enter the main menu, Press ◀ / ▶ button to select.
Press **ENTER** / ▼ to enter.
Press **MENU** again to exit or back to parent menu.

Press ▼ / ▲ button to select among Menu Language / Transparent / OSD Timeout / Closed Caption /Over Scan/ Input Label / Other settings / Restore Default / Setup Wizard.
Press **ENTER** / ▼ to enter.
Press ◀ / ▶ button to adjust.
Press **MENU** again or back to parent menu.

【Menu language】
Select an OSD menu language can be displayed.Default English is selected as menu language.
Press ◀ / ▶ button to select .

【Transparent】
Adjust the transparency of the OSD (on screen display) menu.
Press ◀ / ▶ button to select .

【OSD Time out】
Adjust the duration of the OSD (on screen display) menu.
Press ◀ / ▶ button to select .

【Closed Caption】
Adjust Closed Captioning settings. Only available under TV and AV source.
Press **ENTER** / ▶ button to enter.
For detail please refer to page 14.

Close Caption

【CC Mode】
Turn Closed Captioning on/off.
Press ◀ / ▶ button to select(CC Off / CC On / CC OnMute).

【Analog CC】
Set Closed Captioning for standard(analog) program.
Press ◀ / ▶ button to select (CC1/CC2/CC3/CC4/Text1/Text2/Text3/Text4) .

【Digital CC】
Set Closed Captioning for digital program.
Press ◀ / ▶ button to select(Off / Service1 / Service2 / Service3 / Service4 / Service5 / Service6).

【Option】
Adjust the digital Closed Captioning setting.
Press ▶ button to enter.

【Mode】
Set the look of digital Closed Captioning. Automatic uses broadcaster's style.
Press ◀ / ▶ button to select(Default / Custom).

【Font Style】
Select from 8 font styles.
Press ◀ / ▶ button to select(Default / Font 0 / Font 1 / Font 2 / Font 3 / Font 4 / Font 5 / Font 6 / Font 7).

【Font Size】
Adjust the size of the digital Closed Captioning font.
Pressvbutton to select(Default /Normal / Small / Large) .

【Font Edge Style】
Adjust the edge of the digital Closed Captioning box.
Press ◀ / ▶ button to select(Default / None / Raised / Depressed / Uniform / Left Shadow / Right Shadow).

【Font Edge Color】
Adjust the color of the digital Closed Captioning box.
Press ◀ / ▶ button to select(Default/ Black / White / Red / Green / Blue / Yellow / Magenta / Cyan).

【FG Color】
Adjust the color of the digital Closed Captioning font.
Press ◀ / ▶ button to select(Default/ White / Red / Green / Blue / Yellow / Magenta / Cyan).

【BG Color】
Adjust the digital Closed Captioning background color.
Press ◀ / ▶ button to select(Default/ White / Red / Green / Blue / Yellow / Magenta / Cyan) .

【FG Opacity】
Adjust the transparency of the digital Closed Captioning font.
Press ◀ / ▶ button to select(Default / Solid / Flashing / Translucent / Transparent).

【BG Opacity】
Adjust the digital Closed Captioning background transparency.
Press ◀ / ▶ button to select(Default / Solid / Flashing / Translucent/ Transparent).

【Over Scan】
Press ◀ / ▶ button to select(On / Off).
It is only available to enter 1080i/720p/1080p in DTV/Component/HDMI.Default is On.
It fixed set to be Off in PC/USB/ ATV/AV.

【Input Labels】
Create labels for the devices connected to your TV.
Press **ENTER / ▶** button to enter.

【Other Settings】
Set the parameter of audio only, no signal power off and no operation power off.
Press **ENTER / ▶** button to enter.

【Blue Screen】
To select the transition type required while changing from one channel to another
Press ◀ / ▶ button to select(On / Off).

【Audio Only】
Play the audio with the picture turned off. When you turn the Audio Only on and exit the OSD menu, the panel will be dark; and then press any key to exit the Audio Only status.
Press ◀ / ▶ button to select(On / Off).

【Restore Default】
Change power on options or reset TV to factory default.
Press **ENTER / ▶** button to enter.

【Setup Wizard】
Set the first time installation.

Press **ENTER / ▶** button to enter.
For detail please refer to page 7 .

2.7.5 Lock Menu

Press **MENU** to enter the main menu, Press ◀ / ▶ button to select.
Press **ENTER** / ▼ to enter.
Press **MENU** again to exit or back to parent menu.

Press ▼ / ▲ button to select among Change Password / System Lock / Input Block / US Rating / Canada Rating / RRT Setting / Reset RRT.
Press **ENTER** / ▼ to enter.
Press ◀ / ▶ button to adjust.
Press **MENU** again or back to parent menu.

Enter your 4-digital password. Default password is 0000, and if forget what you set, please call the service center.

【Change Password】
Press ▶ button to enter.
Enter a new 4-digital password then re-enter it to confirm.

【System Lock】
Lock or unlock the buttons on the TV.
Press ◀ / ▶ button to select(Off / On).

【Input Block】
Block or unblock the input sources.
Press ▶ button to enter.
Press ◀ / ▶ button to select(Unblock / Block).

【US Rating】
Restrict movie and TV programs by US Ratings.
Only available when "System Lock" is "on".
Press ▶ button to enter.
For detail please refer to page 16~17.

【Canada Rating】
Restrict movie and TV programs by Canadian Ratings..
Only available when "System Lock" is "on".
Press ▶ button to enter.
For detail please refer to page 17.

【RRT Setting】
Display an advance V-Chip rating table for digital channels.
The item is available only When current stream has downloadable rating data.

【Reset RRT】
Reset the RRT to default.
The item is available only When current stream has downloadable rating data.

2.7.6 Channel Menu

Press **MENU** to enter the main menu, Press ◄ / ► button to select.
Press **ENTER / ▼** to enter.
Press **MENU** again to exit or back to parent menu.

Press ▼ / ▲ button to select among Air/Cable / Auto Scan / Favorite / Channel List / Show/Hide / Channel Number / Channel Label .
Press **ENTER / ▼** to enter.
Press ◄ / ► button to adjust.
Press **MENU** again or back to parent menu.

【Air/Cable】
Select signal type.
Press ◄ / ► button to select(Air/Cable).

【Auto Scan】
Automatically search for channels.
Press **ENTER / ►** button to enter.

[Favorite]
Add channels to create a favorite list.
Press ► button to enter.

【Channel List】
Display your program list.
Press ► button to enter.

【Show/Hide】
Show or hide the channels in your program list.
Press ► button to enter.

【Channel Number】
Show the channel number.
Press ◄ / ► button to adjust.

Channel Label】
Create labels for channels ,up to 7 characters.
Press ◄ / ► button to adjust.

2.7.7 PC Menu

Press **SOURCE** to select PC source.
Press **MENU** to enter the main menu,
Press ◄ / ► button to select Setup menu.
Press ▼ to select PC Settings

Press ▼ / ▲ button to select among H-Pos/V-Pos/Clock/Phase/Auto/Reset PC Settings.
Press **ENTER** / ▼ to enter.
Press ◄ / ► button to adjust.
Press **MENU** again or back to parent menu.

【H-Pos】
Adjust the horizontal position of the picture.
Press ◄ / ► button to adjust.

【V-Pos】
Adjust the vertical position of the picture.
Press ◄ / ► button to adjust.

【Clock】
Minimize vertical stripes in the screen image.
Press ◄ / ► button to adjust.

【Phase】
Minimize horizontal distortion.
Press ◄ / ► button to adjust.

【Auto】
Adjust to the PC signal timing automatically.
Press ► button to enter.

*Notes:

1. PICTURE menu and description are the same as that for TV mode.
2. Audio Language in SOUND menu is invalid.
3. TIME menu and description are the same as that for TV mode.
4. Close Caption in SETUP menu is invalid.
5. US, Canada, RRT Setting and Reset RRT in LOCK menu is invalid.
6. PC mode has no CHANNEL menu.

2.8 Media OPERATION

Note: Before operating **Media** menu,Plug in USB device, then press **SOURCE** button to set the Input Source to **Media** .

Press ◄ / ► button to select **Media** in the Source menu, then press **Enter** button to enter.

Press ◄ / ► button to select the option you want to adjust in the main **Media** menu, then press **Enter** button to enter.

2.8.1 Photo Menu

Press ◄ / ► button to select PHOTO in the main menu, then press **Enter** button to enter.

Press menu button to return back to the previous menu and exit menu to quit.

Press ◄ / ► button to select drive disk you want to watch, then press **Enter** button to enter.

Press ◄ / ► button to select return option to back to the previous menu.

Press ◄ / ► button to select the file you want to watch in the file selecting menu, then press media button to display picture.

When highlighting the option you select, the file information will appear on the right and picture will be previewed in the center.

Press ◄ / ► button to select the file folder you want to search in the file selecting menu, then press red or **Enter** button on your remote control to enter sub-menu.

Press ◄ / ► button to select the file you want to delete in the file selecting menu, then press red button on your remote control and press **Enter** button to delete files.

2.8.2 Music Menu

Press ◄ / ► button to select MUSIC in the main menu, then press **Enter** button to enter.

Press menu button to return back to the previous menu and exit menu to quit.

Press ◄ / ► button to select drive disk you want to watch, then press **Enter** button to enter.

Press ◄ / ► button to select return option to back to the previous menu.

Press ◄ / ► button to select the file you want to watch in the file selecting menu,

then press **Enter** button to add the file to play list, press media button to display and operate file details.

When highlighting the option you select, the file information will appear on the right and picture

will be previewed in the center.

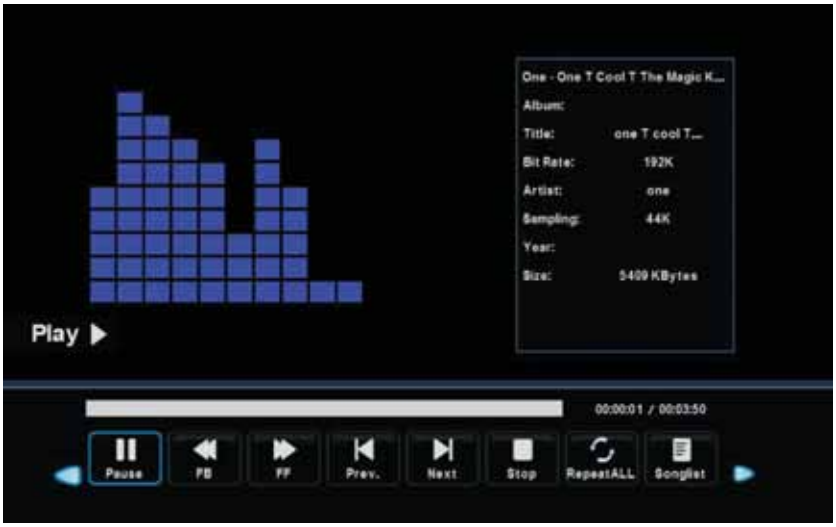

Press ◄ / ► button to select menu in the bottom you want to run, then press **Enter** button to operate.

Press **Menu** button to back to the previous menu and exit button to quit the entire menu.

2.8.3 Movie Menu

Press ◄ / ► button to select MOVIE in the main menu, then press **Enter** button to enter.

Press ◄ / ► to select folder or file, press **ENTER** button to enter next folder , press **RECALL** to return previous folder.

Press ◄ / ► to select the **MOVIE** that you want,press **ENTER** button to play.

Press ◄ / ► button to highight the media and than press **ENTER** button

Press ◄ / ► button to select the file you want to watch in the file selecting menu,

then press **Enter** button to add the file to play list, press media button to display and operate file details.

When highlighting the option you select, the file information will appear on the right and picture

will be previewed in the center.

Press ◄ / ► button to select menu in the bottom you want to run, then press **Enter** button to operate.

Press **Menu** button to back to the previous menu and exit button to quit the entire menu.

Press ▼ button to hide the menu int the bottom.

3.Technical Specification

Product Model	E28D	IQ32
Screen Size	28” diagonal	32” diagonal
Aspect Ratio	16:9	
Power Supply	AC 100-240V~,50/60Hz	
Power Consumption	50W	60W
TV System	NTSC M,ATSC,MPEG2 MP HL,AC-3	
Audio Output Power (Internal)	8Wx2	
Input Terminal	Antenna Input	x 1
	USB Input	x 1
	HDMI Input	x 3
	VGA Input	x 1
	PC AUDIO Input	x 1
	Audio Input (L/R)	x 1
	Video Input	x 1
	YPbPr Input	x 1
	RJ45 Input	NO
	CI card In	NO
	SCART In/Output	NO
	DC In (12V)	NO
Output Terminal	Earphone	x 1
	Audio Line Out(L/R)	NO
	Video Output	NO
	Optical	NO
	Coaxial out	x 1
Working Temperature	0°C~40°C	
Working Humidity	20% ~ 80% Non-condensing	

Note:the specification shown above may change without notice for quality improvement.

4. Supported Signal Modes

A.VGA Mode

Resolution	Horizontal Frequency (Khz)	Vertical Frequency (Hz)	Memo
640 x 480	31.50	60.00	
800 x 600	35.16	56.25	
	37.90	60.00	
1024 x 768	48.40	60.00	
1366x 768	47.85	60.00	
1920x 1080	67.50	60.00	Full HD panel only

Note: You' re suggested to use the VGA connecting cord of not more than 5 meters to ensure the appropriate picture quality.

B.YPbPr Mode

Resolution	Horizontal Frequency (Khz)	Vertical Frequency (Hz)
480i	15.734	59.94
480p(720x480)	31.468	59.94
576i	15.625	50.00
576p(720x576)	31.25	50.00
720p(1280x720)	37.50	50.00
	45.00	60.00
1080i	28.13	50.00
	33.75	60.00
1080P(1920x1080)	67.50	60.00
	56.25	50.00

C.HDMI Mode

Resolution	Horizontal Frequency (Khz)	Vertical Frequency (Hz)
480p	31.468	59.94
576p	31.25	50.00
720P	45.00	60.00
1080i	33.75	60.00
1080P(1920x1080)	67.50	60.00

-When the signal received by the Display exceeds the allowed range, a warning message will appear on the screen.
-You can confirm the input signal format onscreen.

5. Simple Troubleshooting

If the display fails or the performance changes dramatically, check the Display in accordance with the following instructions. Remember to check the peripherals to pinpoint the source of the failure.

Symptom	Solution
Power cannot be turned on.(Power indicator does not light.)	-Check that both ends of the power cable are plugged into the socket appropriately and the wall socket is operational.
No Input Signal message appears.	-Check that the signal line is connected properly. -Check that the power of the relevant peripherals is turned on. -Check that the Input option that has been selected matches with the input signal.
The remote control does not function properly.	-Check the batteries are not drained.(Use new batteries.) -Check that the remote control is within the operating range. -Check that the remote control is pointed to the remote control window on the display. -Check that there are no obstacles between the remote control and the remote control window.
Flashing spots or stripes appear on the screen.	-Check that there are no emission (Car, HV cable or Neon lamp) or other possible interference sources.
Image colour or quality deteriorates.	-Check that all the video settings are adjusted appropriately, such as brightness, contrast, colour etc. -For more information about video settings, refer to OSD Functions in Chapter 2.
Screen position and size are incorrect.	-Check that the screen position and size is adjusted appropriately.
Image or colour is incorrect.	-Check that the signal line is connected properly. -When connecting to a PC, you can change the resolution of the PC to acquire the correct image. The discrepancy of the PC output signal may affect the display of the image.
Display warning message.	-Check that the input signal line is properly fixed. -Select the correct input signal. -For more information, refer to Supported Signal Modes in Chapter 4.