VocoPro®
PROFESSIONAL VOCAL SYSTEMS™

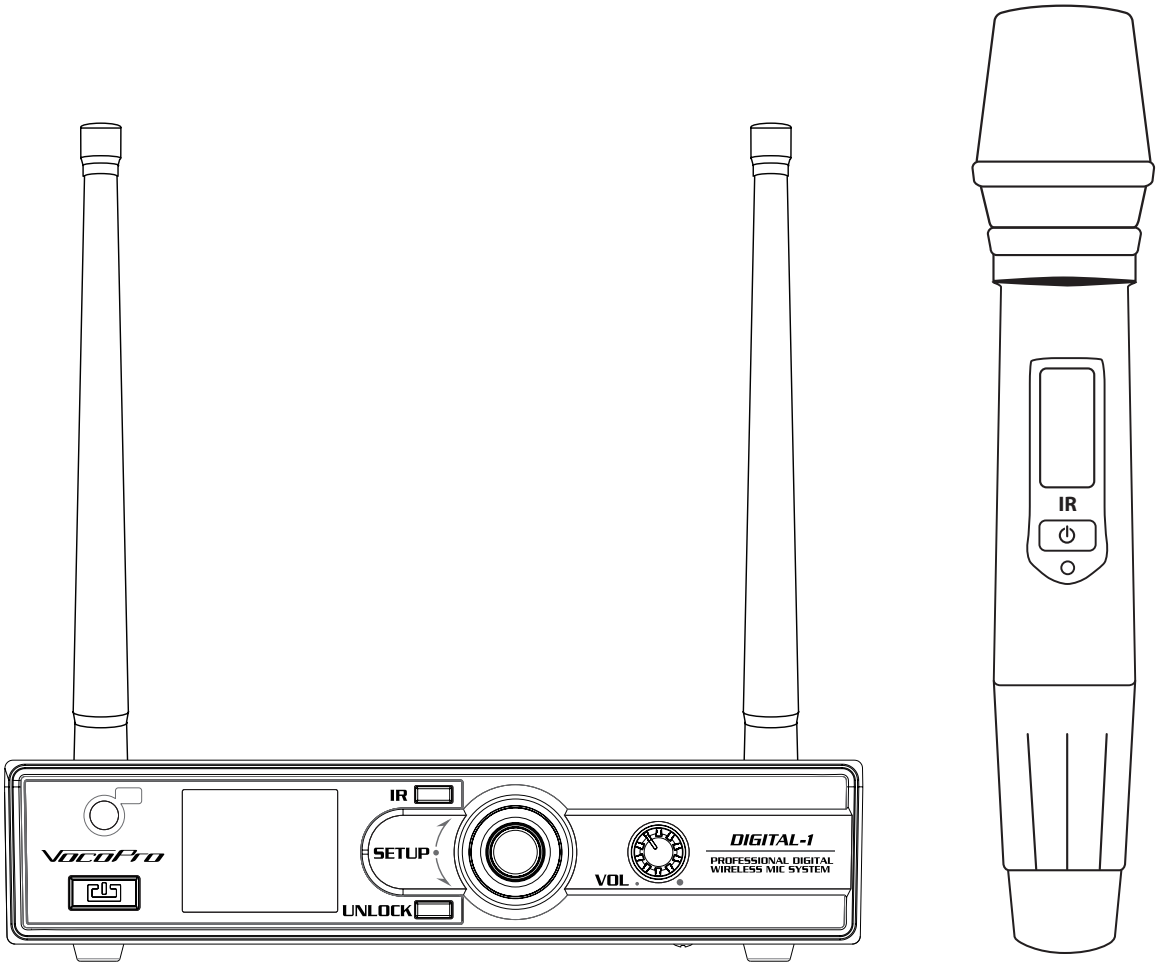

Digital-1

Digital Wireless Microphone with Mic-On-Chip Technology

owner's manual

TABLE OF CONTENTS

Safety 4
FCC Information 5
Welcome. 6
Listening 7
Specifications. 8
Getting Connected 9
Descriptions and Functions 10
Operations. 13
Commonly Asked Questions 16

SAFETY

CAUTION
RISK OF SHOCK

CAUTION: To reduce the risk of electric shock, do not remove cover (or back). No user-serviceable parts inside. Only refer servicing to qualified service personnel.

Explanation of Graphical Symbols

The lightning flash & arrowhead symbol, within an equilateral triangle, is intended to alert you to the presence of danger.

The exclamation point within an equilateral triangle is intended to alert you to the presence of important operating and servicing instructions.

WARNING
To reduce the risk of fire or electric shock, do not expose this unit to rain or moisture.

1. **Read Instructions** - All the safety and operating instructions should be read before the appliance is operated.

2. **Retain Instructions** - The safety and operating instructions should be retained for future reference.

3. **Heed Warnings** - All warnings on the appliance and in the operating instructions should be adhered to.

4. **Follow Instructions** - All operating and use instructions should be followed.

5. **Attachments** - Do not use attachments not recommended by the product manufacturer as they may cause hazards.

6. **Water and Moisture** - Do not use this unit near water. For example, near a bathtub or in a wet basement and the like.

7. **Carts and Stands** - The appliance should be used only with a cart or stand that is recommended by the manufacturer.

7 A. An appliance and cart combination should be moved with care. Quick stops, excessive force, and uneven surfaces may cause an overturn.

8. **Ventilation** - The appliance should be situated so its location does not interfere with its proper ventilation. For example, the appliance should not be situated on a bed, sofa, rug, or similar surface that may block the ventilation slots.

9. **Heat** - The appliance should be situated away from heat sources such as radiators, heat registers, stoves, or other appliances (including amplifiers) that produce heat.

10. **Power Sources** - The appliance should be connected to a power supply only of the type described in the operating instructions or as marked on the appliance.

11. **Grounding or Polarization** - Precautions should be taken so that the grounding or polarization means of an appliance is not defeated.

12. **Power-Cord Protection** - Power-supply cords should be routed so that they are not likely to be walked on or pinched by items placed upon or against them, paying particular attention to cords at plugs, convenience receptacles, and the point where they exit from the appliance.

13. **Cleaning** - Unplug this unit from the wall outlet before cleaning. Do not use liquid cleaners or aerosol cleaners. Use a damp cloth for cleaning.

14. **Power lines** - An outdoor antenna should be located away from power lines.

15. **Nonuse Periods** - The power cord of the appliance should be unplugged from the outlet when left unused for a long period of time.

16. **Object and Liquid Entry** - Care should be taken so that objects do not fall and liquids are not spilled into the enclosure through openings.

17. **Damage Requiring Service** - The appliance should be serviced by qualified service personnel when:

A. The power supply cord or plug has been damaged; or
B. Objects have fallen into the appliance; or
C. The appliance has been exposed to rain; or
D. The appliance does not appear to operate normally or exhibits a marked change in performance; or
E. The appliance has been dropped, or the enclosure damaged.

18. **Servicing** - The user should not attempt to service the appliance beyond that described in the operating instructions. All other servicing should be referred to qualified service personnel.

Note:
To CATV system installer's (U.S.A.): This reminder is provided to call the CATV system installer's attention to Article 820-40 of the NEC that provides guidelines for proper grounding and, in particular, specifies that the cable ground shall be connected as close to the point of cable entry as practical.

FCC INFORMATION

1. IMPORTANT NOTICE: DO NOT MODIFY THIS UNIT!: This product, when installed as indicated in the instructions contained in this manual, meets FCC requirements. Modifications not expressly approved by Vocopro may void your authority, granted by the FCC, to use this product.

2. IMPORTANT: When connecting this product to accessories and/or another product use only high quality shielded cables. Cable(s) supplied with this product MUST be used. Follow all installation instructions. Failure to follow instructions could void your FCC authorization to use this product in the U.S.A.

3. NOTE: This product has been tested and found to comply with the requirements listed in FCC Regulations, Part 15 for Class "B" digital devices. Compliance with these requirements provides a reasonable level of assurances that your use of this product in a residential environment will not result in harmful interference with other electronic devices. This equipment generates/uses radio frequencies and, if not installed and used according to the instructions found in the owner's manual, may cause interference harmful to the operation of other electronic devices. Compliance with FCC regulations does not guarantee that interference will not occur in all installations. If this product is found to be the source of interference, which can be determined by turning the unit "Off" and "On", please try to eliminate the problem by using one of the following measures:

Relocate either this product or the device that is being affected by the interference.

Use power outlets that are on different branch (circuit breaker or fuse) circuits or install AC line filter(s).

In the case of radio or TV interference, relocate/reorient the antenna. If the antenna lead-in is 300-ohm ribbon lead, change the lead-in to coaxial type cable.

If these corrective measures do not produce satisfactory results, please contact your local retailer authorized to distribute Vocopro products. If you can not locate the appropriate retailer, please contact Vocopro, 1728 Curtiss Court, La Verne, CA 91750.

CAUTION
The apparatus is not disconnected from the AC power source so long as it is connected to the wall outlet, even if the apparatus itself is turned off. To fully ensure that the apparatus is indeed fully void of residual power, leave unit disconnected from the AC outlet for at least fifteen seconds.

CALIFORNIA PROP 65 WARNING
WARNING: This product contains chemicals known to the state of California to cause cancer and birth defects or other reproductive harm.
(California law requires this warning to be given to customers in the State of California.)
For more information: www.vocopro.com/prop65

CAUTION:
READ THIS BEFORE OPERATING YOUR UNIT

1. To ensure the finest performance, please read this manual carefully. Keep it in a safe place for future reference.

2. Install your unit in a cool, dry, clean place - away from windows, heat sources, and too much vibration, dust, moisture or cold. Avoid sources of hum (transformers, electric motors). To prevent fire or electrical shock, do not expose to rain and water.

3. Do not operate the unit upside-down.

4. Never open the cabinet. If a foreign object drops into the set, contact your dealer.

5. Place the unit in a location with adequate air circulation. Do not interfere with its proper ventilation; this will cause the internal temperature to rise and may result in a failure.

6. Do not use force on switches, knobs or cords. When moving the unit, first turn the unit off. Then gently disconnect the power plug and the cords connecting to other equipment. Never pull the cord itself.

7. Do not attempt to clean the unit with chemical solvents: this might damage the finish. Use a clean, dry cloth.

8. Be sure to read the "Troubleshooting" section on common operating errors before concluding that your unit is faulty.

9. This unit consumes a fair amount of power even when the power switch is turned off. We recommend that you unplug the power cord from the wall outlet if the unit is not going to be used for a long time. This will save electricity and help prevent fire hazards. To disconnect the cord, pull it out by grasping the plug. Never pull the cord itself.

10. To prevent lightning damage, pull out the power cord and remove the antenna cable during an electrical storm.

11. The general digital signals may interfere with other equipment such as tuners or receivers. Move the system farther away from such equipment if interference is observed.

NOTE:
Please check the copyright laws in your country before recording from records, compact discs, radio, etc. Recording of copyrighted material may infringe copyright laws.

Voltage Selector (General Model Only)

Be sure to position the voltage selector to match the voltage of your local power lines before installing the unit.

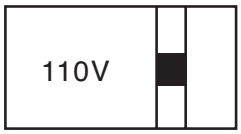

Welcome

And thank you for purchasing the **Digital-1** from VocoPro, your ultimate choice in Karaoke entertainment! With years of experience in the music entertainment business, VocoPro is a leading manufacturer of Karaoke equipment, and has been providing patrons of bars, churches, schools, clubs and individual consumers the opportunity to sound like a star with full-scale club models, in-home systems and mobile units. All our products offer solid performance and sound reliability, and to reinforce our commitment to customer satisfaction, we have customer service and technical support professionals ready to assist you with your needs. We have provided some contact information for you below.

VocoPro
1728 Curtiss Court
La Verne, CA 91750
Toll Free: 800-678-5348
TEL: 909-593-8893
FAX: 909-593-8890

VocoPro Company Email Directory

Customer Service & General Information
info@vocopro.com

Tech Support
techsupport@vocopro.com

Remember Our Website
Be sure to visit the VocoPro website **www.vocopro.com** for the latest information on new products, packages and promos. And while you're there don't forget to check out our Club VocoPro for Karaoke news and events, chat rooms, club directories and even a KJ Service directory!

We look forward to hearing you sound like a PRO, with VocoPro, the singer's ultimate choice.

FOR YOUR RECORDS

Please record the model number and serial number below, for easy reference, in case of loss or theft. These numbers are located on the rear panel of the unit. Space is also provided for other relevant information

Model Number

Serial Number

Date of Purchase

Place of Purchase

LISTENING

Selecting fine audio equipment such as the unit you've just purchased is only the start of your musical enjoyment. Now it's time to consider how you can maximize the fun and excitement your equipment offers. VocoPro and the Electronic Industries Association's Consumer Electronics Group want you to get the most out of your equipment by playing it at a safe level. One that lets the sound come through loud and clear without annoying blaring or distortion and, most importantly, without affecting your sensitive hearing.

Sound can be deceiving. Over time your hearing "comfort level" adapts to a higher volume of sound. So what sounds "normal" can actually be loud and harmful to your hearing. Guard against this by setting your equipment at a safe level BEFORE your hearing adapts.

To establish a safe level:
- Start your volume control at a low setting.
- Slowly increase the sound until you can hear it comfortably and clearly, and without distortion.

Once you have established a comfortable sound level:
- Set the dial and leave it there.
- Pay attention to the different levels in various recordings.

Taking a minute to do this now will help to prevent hearing damage or loss in the future. After all, we want you listening for a lifetime.

Used wisely, your new sound equipment will provide a lifetime of fun and enjoyment. Since hearing damage from loud noise is often undetectable until it is too late, this manufacturer and the Electronic Industries Association's Consumer Electronics Group recommend you avoid prolonged exposure to excessive noise. This list of sound levels is included for your protection.

Some common decibel ranges:

Level	Example
30	Quiet library, Soft whispers
40	Living room, Refrigerator, Bedroom away from traffic
50	Light traffic, Normal Conversation
60	Air Conditioner at 20 ft., Sewing machine
70	Vacuum cleaner, Hair dryer, Noisy Restaurant
80	Average city traffic, Garbage disposals, Alarm clock at 2 ft.

The following noises can be dangerous under constant exposure:

Level	Example
90	Subway, Motorcycle, Truck traffic, Lawn Mower
100	Garbage truck, Chainsaw, Pneumatics drill
120	Rock band concert in front of speakers
140	Gunshot blast, Jet plane
180	Rocket launching pad

-Information courtesy of the Deafness Research Foundation

SPECIFICATIONS

RECEIVER
Carrier Frequency: UHF902.3 - 927.7 MHz
Bandwidth: 26 MHz
Channel Bandwidth: 300 KHz
Preset Group: 15 group, 6 frequenceies in each group.
Dynamic Range: 96 dB
Distortion: < 0.1%
Frequency Response: 30-20 KHz/+-2dB
Signal/Noise Ratio: 96dB
Receiving Sensitivity: -95dBm
Transmission Delay: <3 ms
Power Supply: DC12V 1A
Audio Output: 1x 1/4", 1 x XLR balance output

MICROPHONE
Frequency Switch: IR SYNC
Output Power: 0.40 mW
Harmonic Radiation: <-50 dBc
Battery: 1x18500 Lithium
Battery Life: >8h

WHAT'S IN THE BOX:
Power Adapter
1/8" - 1/8" stereo cable
Lithium Battery (18500)
USB Charge Cable
Digital-1 Reciever
Digital-1 Microphone

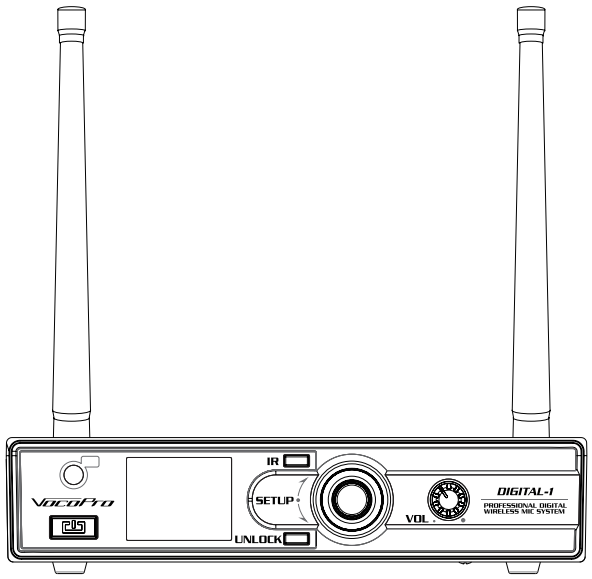

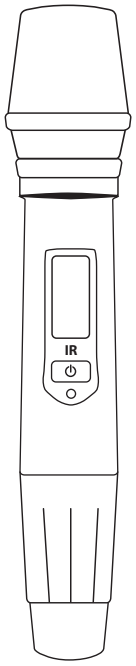

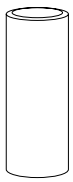

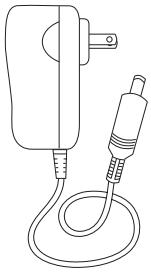

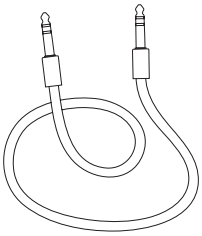

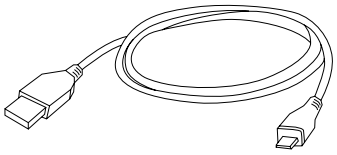

GETTING CONNECTED

The Digital-1 uses two types of connections: balanced XLR and unbalanced ¼". One of these connections must be made to the mixer or sound system in order for sound to be heard.

USING THE UNBALANCED ¼":

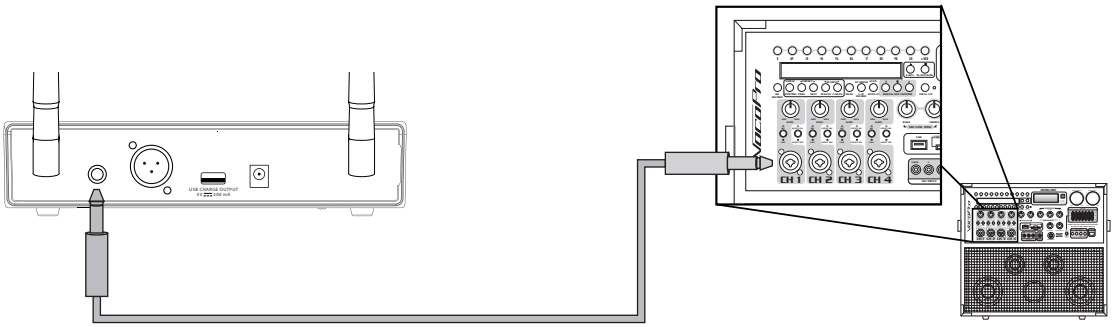

- Connect one end of the ¼" cable into the Mixed Output jack located on the back of the Digital-1 receiver.
- Connect the other end of the ¼" cable into a unbalanced microphone input jack on the mixer or sound system being used.

USING THE BALANCED XLR:

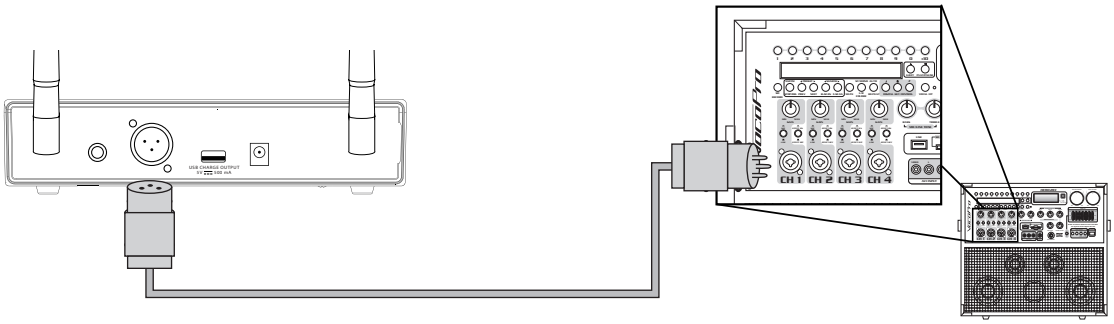

- Connect the female end of a balanced XLR cable into the Balanced Output jack located on the back of the Digital-1 receiver.
- Connect the male end of the balanced XLR cable into a balanced microphone input jack on the mixer or sound system being used.

USING THE USB RECHARGE JACK:

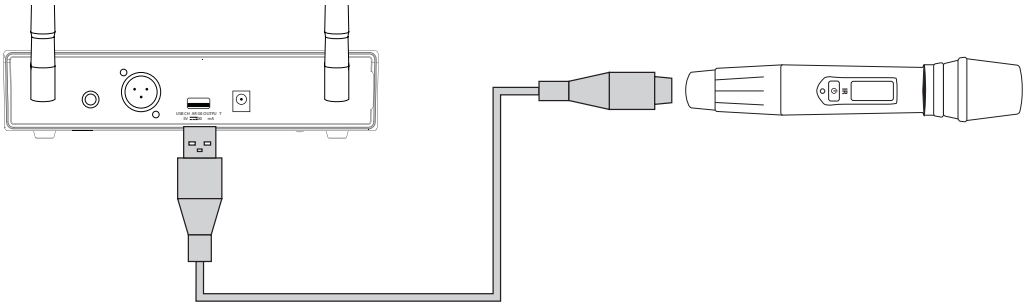

- Connect one of a micro-USB cable into the USB Charge Output located on the back of the Digital-1 receiver.
- Connect the other end of the micro-USB cable into the USB Charge jack located on the bottom end of the microphone.

DESCRIPTIONS AND FUNCTIONS

FRONT PANEL - RECEIVER

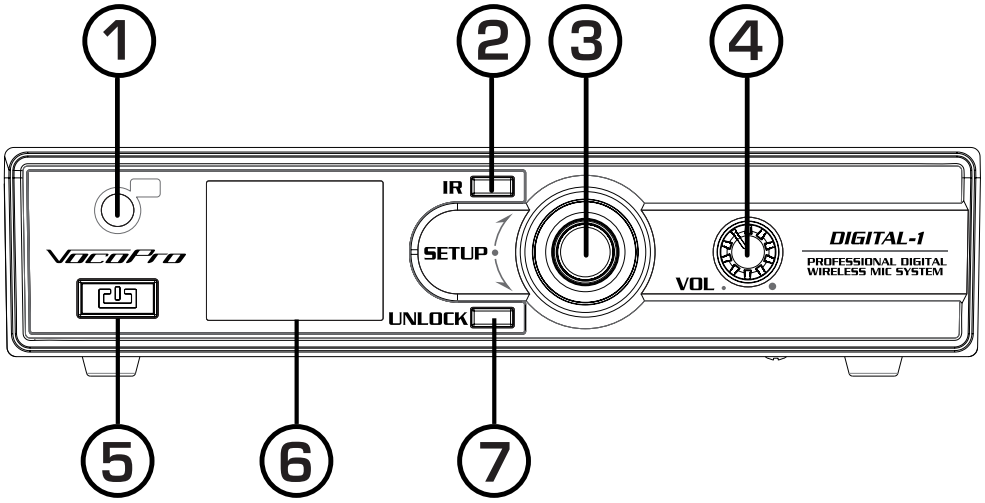

1. IR Sensor – This is used to pair and sync the microphone.
2. IR Button – This is used to initialize the pairing mode.
3. Selector Knob – This navigates the menu and is used to confirm a selection. Click knob to confirm selection.
4. Volume – This alters the volume of the microphone audio.
5. Power – This toggles the receiver power on/off.
6. Display – This shows current frequency, mic battery level, graphic frequency analyzer, and menus.

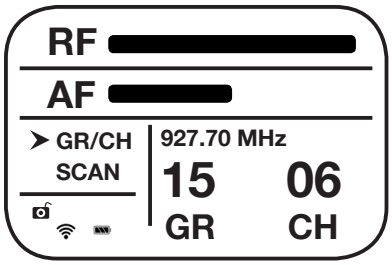

a. Display Icons
- RF – Indicates signal intensity. The stronger the signal, the more the bar is filled.
- AF – Indicates the audio level. The louder the audio, the more the bar is filled.
- – Indicates microphone battery level. The indicator will display remaining battery power.
- – Indicates the receiver is sending new settings through the IR sensor to the microphone.

7. Unlock – This will unlock the selector knob and allow the menu settings to be altered. Press and hold to toggle the lock.

DESCRIPTIONS AND FUNCTIONS

BACK PANEL – RECEIVER

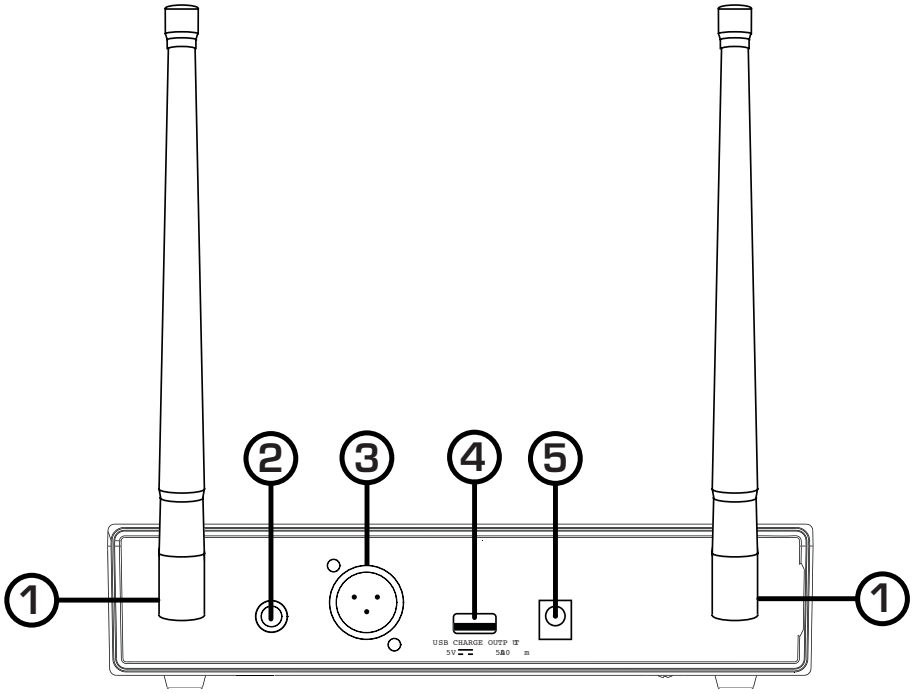

1. Antenna – These receive the RF/AF transmission from the microphone.
2. Mixed Output – This unbalanced ¼" output sends the microphone audio out to a mixer or sound system.
3. XLR Output – This balanced XLR output sends the microphone audio out to a mixer or sound system.
4. USB Charge Output – This USB will charge the microphone. Output current: 500mA @ 5V.
5. Power In – This is where the receivers' power adapter is connected.

DESCRIPTIONS AND FUNCTIONS

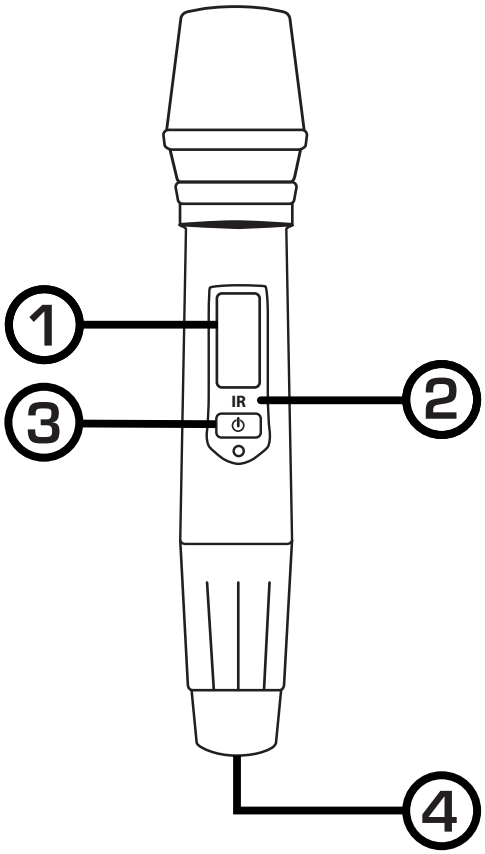

MICROPHONE

1. Display – This shows current frequency, battery level, and transmission level.

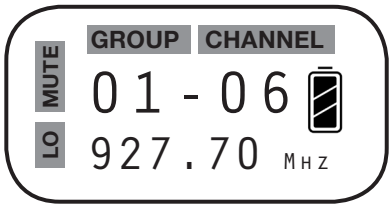

a. Display Icons
- – Indicates microphone battery level. The indicator will display remaining battery power.
- Mute – This is the microphones mute status. When lit, the microphone audio is muted. Press power button once to toggle the mute feature.
- Hi/Lo – This is the microphone transmission status.
- Frequency – This is the current Group/Channel with the corresponding frequency.

2. IR Sensor – This is used to pair and sync the microphone with the receiver.
3. Power – This toggles the microphone power. Press and hold to power off/on.
4. USB Charge Port – This is where the USB charge cable connects.

OPERATIONS

CHANGING THE FREQUENCY:
The Digital-1 utilizes a frequency analyzer to provide a graphical view of the environmental interference. The color LCD screen will display a graph of the current interference. Once identified, the frequency can be changed automatically or manually.

AUTOMATICALLY:

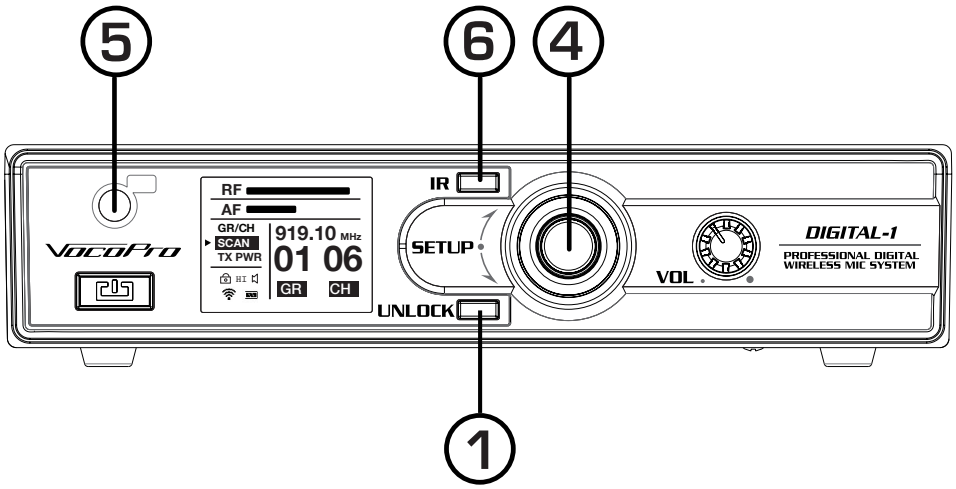

1. Press and hold unlock button to access the Menu.
2. Highlight and select the "Scan" option with the Selector Knob.
3. Select which half of the spectrum will be scanned, either Up or Down.

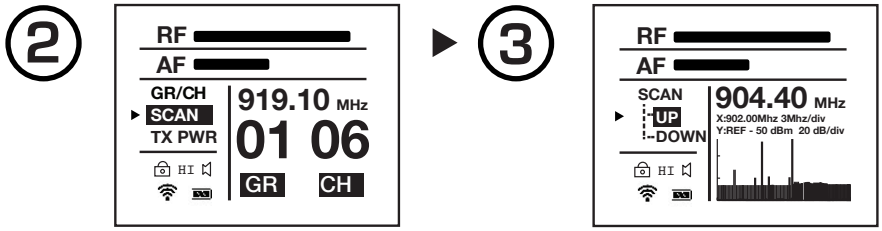

4. Use Selector Knob to confirm selection and start Frequency Scan.
5. Once Scan is complete, hold microphone IR sensor in line and within 4 inches of the IR sensor located near the display.

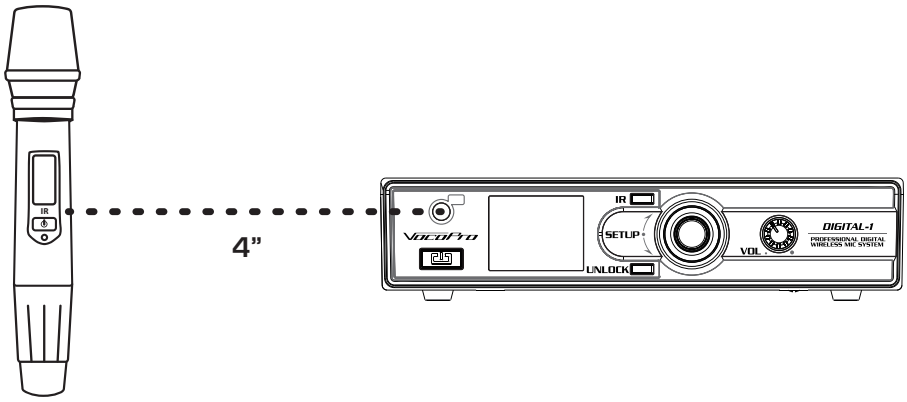

6. Press the IR button to communicate the new frequency to the microphone.

OPERATIONS

MANUALLY:

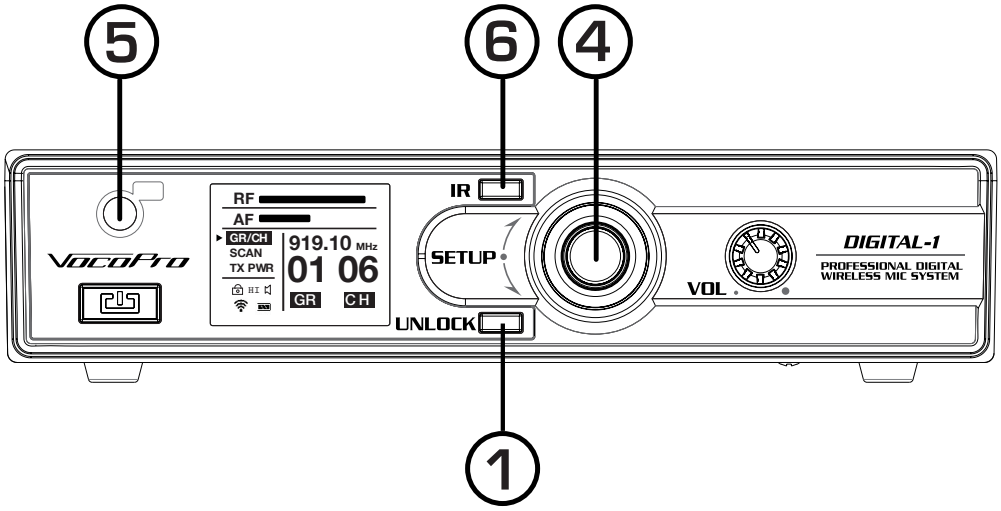

1. Press and hold the unlock button the access the Menu.
2. Highlight and select the “GR/CH” option with the Selector Knob.
3. Select from either “GR” or “CH” to modify the channel.
   a. GR – Refers to the Group of Channels to choose from. There are 15 Groups.
   b. CH – Refers to the Channels within the Groups. There are 6 channels within each Group.

4. Use the Selector Knob to confirm selections.
5. Once confirmed, hold the microphone IR sensor in line and within 4 inches of the IR sensor located near the display.

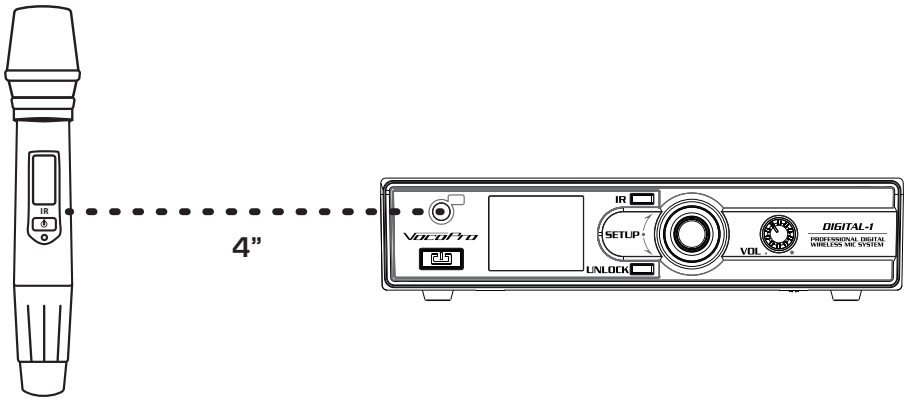

6. Press the IR button to communicate the new frequency to the microphone.
   NOTE: Each channel is one microphone frequency.

CHANGING THE TRANSMISSION POWER

The Digital-1 has two levels of output transmission: high and low. The Low setting has a range of over 100ft. The High setting has a range of over 200ft but consumes the battery at a faster rate.

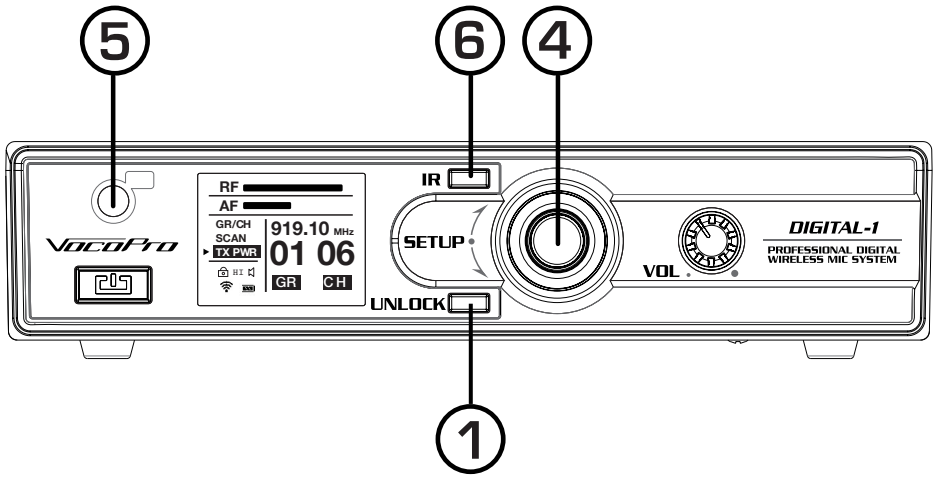

1. Press and hold the unlock button to access the Menu.
2. Highlight and select the “TX PWR” option with the Selector Knob.
3. Select from either “High” or “Low” to modify the output power.

4. Once output power has been modified, hold the microphone IR sensor in line and within 4 inches of the IR sensor located near the display.

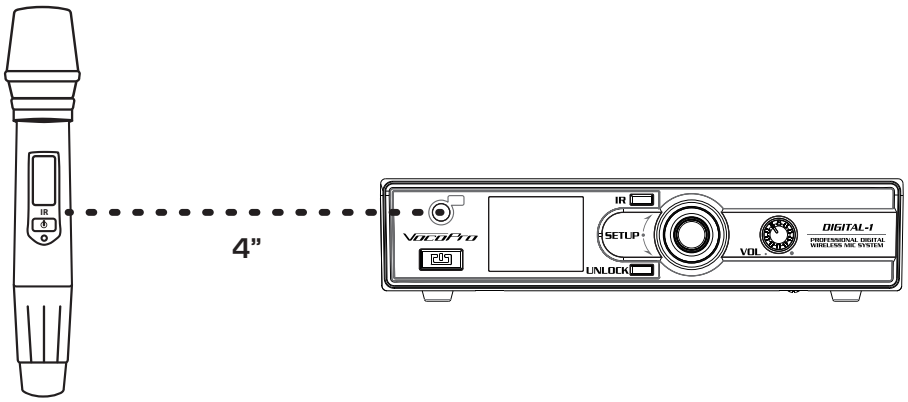

5. Press the IR button to communicate the new power level to the microphone.

COMMONLY ASKED QUESTIONS

1. WHY IS THERE NO MICROPHONE AUDIO?

- The mic volume is turned down.
- The connections from the Digital-1 recever and the sound system are disconnected.
- The microphone needs to be resynced with the receiver. Refer to “changing the frequency”.
- The battery is too low.
- The microphone is muted. Press power button once to toggle the mute feature.

2. WHY WON’T THE MICROPHONE SYNC?

- The IR sensors are not aligned or within range when pairing. Be sure the microphone and receiver sensors are aligned and within 4 inches of eachother. Power the micrphone off/on to reset the microphone.

3. WHAT DOES “UP & DOWN” MEAN IN THE FREQUENCY ANALYZER?

- The UP & DOWN scan feature refers to the Frequency Analyzer searching above or below the currently set frequency. Select up to find a higher frequency. Select down to find a lower frequency.

4. I’M MISSING PARTS FROM THE BOX. WHAT CAN I DO?

- Please contact Vocopro at 1-800-678-5348 regarding any missing or defective parts.

FCC Caution.

§ 15.19 Labelling requirements.
This device complies with part 15 of the FCC Rules. Operation is subject to the following two conditions: (1) This device may not cause harmful interference, and (2) this device must accept any interference received, including interference that may cause undesired operation.

§ 15.21 Information to user.
Any Changes or modifications not expressly approved by the party responsible for compliance could void the user's authority to operate the equipment.

§ 15.105 Information to the user.
Note: This equipment has been tested and found to comply with the limits for a Class B digital device, pursuant to part 15 of the FCC Rules. These limits are designed to provide reasonable protection against harmful interference in a residential installation. This equipment generates uses and can radiate radio frequency energy and, if not installed and used in accordance with the instructions, may cause harmful interference to radio communications. However, there is no guarantee that interference will not occur in a particular installation. If this equipment does cause harmful interference to radio or television reception, which can be determined by turning the equipment off and on, the user is encouraged to try to correct the interference by one or more of the following measures:
-Reorient or relocate the receiving antenna.
-Increase the separation between theequipment and receiver.
-Connect the equipment into an outlet on a circuit different from that to which the receiver is connected.
-Consult the dealer or an experienced radio/TV technician for help.