User Manual

Table of Contents

Safety Instructions 3
FCC Information 4
Welcome. 5
Listening for a Lifetime 6
Getting Started 7
Descriptions and Functions 9
Getting Connected 12
Attaching the Rack Mounts 13
Commonly Asked Questions 15

FEATURES

- Utilizes the Sparsely Used 900MHz Frequency Band
- 24-Bit Digital Technology Delivers a Clean, Professional Quality Signal
- Individual Digital Microphone IDs Eliminates Channel Cross-Talk
- Wide Frequency Response (50-20,000 Hz) Ensures Natural Sounding Vocals
- Brackets Included for Mounting in a Rack Case
- Four Different Frequency Sets Available
- Warranty: 1 Year
- Unit Dimensions: 8.375”W x 1.25”H x 5.25”D

Safety Instructions

CAUTION
RISK OF SHOCK

CAUTION: To reduce the risk of electric shock, do not remove cover (or back). No user-serviceable parts inside. Only refer servicing to qualified service personnel.

Explanation of Graphical Symbols

The lightning flash & arrowhead symbol, within an equilateral triangle, is intended to alert you to the presence of danger.

The exclamation point within an equilateral triangle is intended to alert you to the presence of important operating and servicing instructions.

WARNING
To reduce the risk of fire or electric shock, do not expose this unit to rain or moisture.

1. **Read Instructions** - All the safety and operating instructions should be read before the appliance is operated.

2. **Retain Instructions** - The safety and operating instructions should be retained for future reference.

3. **Heed Warnings** - All warnings on the appliance and in the operating instructions should be adhered to.

4. **Follow Instructions** - All operating and use instructions should be followed.

5. **Attachments** - Do not use attachments not recommended by the product manufacturer as they may cause hazards.

6. **Water and Moisture** - Do not use this unit near water. For example, near a bathtub or in a wet basement and the like.

7. **Carts and Stands** - The appliance should be used only with a cart or stand that is recommended by the manufacturer.

7 A. An appliance and cart combination should be moved with care. Quick stops, excessive force, and uneven surfaces may cause an overturn.

8. **Ventilation** - The appliance should be situated so its location does not interfere with its proper ventilation. For example, the appliance should not be situated on a bed, sofa, rug, or similar surface that may block the ventilation slots.

9. **Heat** - The appliance should be situated away from heat sources such as radiators, heat registers, stoves, or other appliances (including amplifiers) that produce heat.

10. **Power Sources** - The appliance should be connected to a power supply only of the type described in the operating instructions or as marked on the appliance.

11. **Grounding or Polarization** - Precautions should be taken so that the grounding or polarization means of an appliance is not defeated.

12. **Power-Cord Protection** - Power-supply cords should be routed so that they are not likely to be walked on or pinched by items placed upon or against them, paying particular attention to cords at plugs, convenience receptacles, and the point where they exit from the appliance.

13. **Cleaning** - Unplug this unit from the wall outlet before cleaning. Do not use liquid cleaners or aerosol cleaners. Use a damp cloth for cleaning.

14. **Power lines** - An outdoor antenna should be located away from power lines.

15. **Nonuse Periods** - The power cord of the appliance should be unplugged from the outlet when left unused for a long period of time.

16. **Object and Liquid Entry** - Care should be taken so that objects do not fall and liquids are not spilled into the enclosure through openings.

17. **Damage Requiring Service** - The appliance should be serviced by qualified service personnel when:

A. The power supply cord or plug has been damaged; or
B. Objects have fallen into the appliance; or
C. The appliance has been exposed to rain; or
D. The appliance does not appear to operate normally or exhibits a marked change in performance; or
E. The appliance has been dropped, or the enclosure damaged.

18. **Servicing** - The user should not attempt to service the appliance beyond that described in the operating instructions. All other servicing should be referred to qualified service personnel.

Note:
To CATV system installer's (U.S.A.): This reminder is provided to call the CATV system installer's attention to Article 820-40 of the NEC that provides guidelines for proper grounding and, in particular, specifies that the cable ground shall be connected as close to the point of cable entry as practical.

FCC Information

1. IMPORTANT NOTICE: DO NOT MODIFY THIS UNIT!: This product, when installed as indicated in the instructions contained in this manual, meets FCC requirements. Modifications not expressly approved by Vocopro may void your authority, granted by the FCC, to use this product.

2. IMPORTANT: When connecting this product to accessories and/or another product use only high quality shielded cables. Cable(s) supplied with this product MUST be used. Follow all installation instructions. Failure to follow instructions could void your FCC authorization to use this product in the U.S.A.

3. NOTE: This product has been tested and found to comply with the requirements listed in FCC Regulations, Part 15 for Class "B" digital devices. Compliance with these requirements provides a reasonable level of assurances that your use of this product in a residential environment will not result in harmful interference with other electronic devices. This equipment generates/uses radio frequencies and, if not installed and used according to the instructions found in the owner's manual, may cause interference harmful to the operation of other electronic devices. Compliance with FCC regulations does not guarantee that interference will not occur in all installations. If this product is found to be the source of interference, which can be determined by turning the unit "Off" and "On", please try to eliminate the problem by using one of the following measures:

Relocate either this product or the device that is being affected by the interference.

Use power outlets that are on different branch (circuit breaker or fuse) circuits or install AC line filter(s).

In the case of radio or TV interference, relocate/reorient the antenna. If the antenna lead-in is 300-ohm ribbon lead, change the lead-in to coaxial type cable.

If these corrective measures do not produce satisfactory results, please contact your local retailer authorized to distribute Vocopro products. If you can not locate the appropriate retailer, please contact Vocopro, 1728 Curtiss Court, La Verne, CA 91750.

CAUTION
The apparatus is not disconnected from the AC power source so long as it is connected to the wall outlet, even if the apparatus itself is turned off. To fully ensure that the apparatus is indeed fully void of residual power, leave unit disconnected from the AC outlet for at least fifteen seconds.

CALIFORNIA PROP 65 WARNING
WARNING: This product contains chemicals known to the state of California to cause cancer and birth defects or other reproductive harm.
(California law requires this warning to be given to customers in the State of California.)
For more information: www.vocopro.com/prop65

CAUTION:
READ THIS BEFORE OPERATING YOUR UNIT

1. To ensure the finest performance, please read this manual carefully. Keep it in a safe place for future reference.
2. Install your unit in a cool, dry, clean place - away from windows, heat sources, and too much vibration, dust, moisture or cold. Avoid sources of hum (transformers, v motors). To prevent fire or electrical shock, do not expose to rain and water.
3. Do not operate the unit upside-down.
4. Never open the cabinet. If a foreign object drops into the set, contact your dealer.
5. Place the unit in a location with adequate air circulation. Do not interfere with its proper ventilation; this will cause the internal temperature to rise and may result in a failure.
6. Do not use force on switches, knobs or cords. When moving the unit, first turn the unit off. Then gently disconnect the power plug and the cords connecting to other equipment. Never pull the cord itself.
7. Do not attempt to clean the unit with chemical solvents: this might damage the finish. Use a clean, dry cloth.
8. Be sure to read the "Troubleshooting" section on common operating errors before concluding that your unit is faulty.
9. This unit consumes a fair amount of power even when the power switch is turned off. We recommend that you unplug the power cord from the wall outlet if the unit is not going to be used for a long time. This will save electricity and help prevent fire hazards. To disconnect the cord, pull it out by grasping the plug. Never pull the cord itself.
10. To prevent lightning damage, pull out the power cord and remove the antenna cable during an electrical storm.
11. The general digital signals may interfere with other equipment such as tuners or receivers. Move the system farther away from such equipment if interference is observed.

NOTE:
Please check the copyright laws in your country before recording from records, compact discs, radio, etc. Recording of copyrighted material may infringe copyright laws.

Voltage Selector (General Model Only)
Be sure to position the voltage selector to match the voltage of your local power lines before installing the unit.

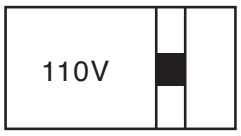

Welcome

And thank you for purchasing the **Hybrid-Quad** from VocoPro, your ultimate choice in Karaoke entertainment! With years of experience in the music entertainment business, VocoPro is a leading manufacturer of Karaoke equipment, and has been providing patrons of bars, churches, schools, clubs and individual consumers the opportunity to sound like a star with full-scale club models, in-home systems and mobile units. All our products offer solid performance and sound reliability, and to reinforce our commitment to customer satisfaction, we have customer service and technical support professionals ready to assist you with your needs. We have provided some contact information for you below.

VocoPro
1728 Curtiss Court
La Verne, CA 91750
Toll Free: 800-678-5348
TEL: 909-593-8893
FAX: 909-593-8890

VocoPro Company Email Directory

Customer Service & General Information
info@vocopro.com

Tech Support
techsupport@vocopro.com

Remember Our Website
Be sure to visit the VocoPro website **www.vocopro.com** for the latest information on new products, packages and promos. And while you're there don't forget to check out our Club VocoPro for Karaoke news and events, chat rooms, club directories and even a KJ Service directory!

We look forward to hearing you sound like a PRO, with VocoPro, the singer's ultimate choice.

FOR YOUR RECORDS

Please record the model number and serial number below, for easy reference, in case of loss or theft. These numbers are located on the rear panel of the unit. Space is also provided for other relevant information

Model Number _____

Serial Number _____

Date of Purchase _____

Place of Purchase _____

Listening for a Lifetime

Selecting fine audio equipment such as the unit you've just purchased is only the start of your musical enjoyment. Now it's time to consider how you can maximize the fun and excitement your equipment offers. VocoPro and the Electronic Industries Association's Consumer Electronics Group want you to get the most out of your equipment by playing it at a safe level. One that lets the sound come through loud and clear without annoying blaring or distortion and, most importantly, without affecting your sensitive hearing.

Sound can be deceiving. Over time your hearing "comfort level" adapts to a higher volume of sound. So what sounds "normal" can actually be loud and harmful to your hearing. Guard against this by setting your equipment at a safe level BEFORE your hearing adapts.

To establish a safe level:
- Start your volume control at a low setting.
- Slowly increase the sound until you can hear it comfortably and clearly, and without distortion.

Once you have established a comfortable sound level:
- Set the dial and leave it there.
- Pay attention to the different levels in various recordings.

Taking a minute to do this now will help to prevent hearing damage or loss in the future. After all, we want you listening for a lifetime.

Used wisely, your new sound equipment will provide a lifetime of fun and enjoyment. Since hearing damage from loud noise is often undetectable until it is too late, this manufacturer and the Electronic Industries Association's Consumer Electronics Group recommend you avoid prolonged exposure to excessive noise. This list of sound levels is included for your protection.

Some common decibel ranges:

Level	Example
30	Quiet library, Soft whispers
40	Living room, Refrigerator, Bedroom away from traffic
50	Light traffic, Normal Conversation
60	Air Conditioner at 20 ft., Sewing machine
70	Vacuum cleaner, Hair dryer, Noisy Restaurant
80	Average city traffic, Garbage disposals, Alarm clock at 2 ft.

The following noises can be dangerous under constant exposure:

Level	Example
90	Subway, Motorcycle, Truck traffic, Lawn Mower
100	Garbage truck, Chainsaw, Pneumatics drill
120	Rock band concert in front of speakers
140	Gunshot blast, Jet plane
180	Rocket launching pad

-Information courtesy of the Deafness Research Foundation

Getting Started

IF YOU PURCHASED THE HYBRID QUAD-H

- Hybrid-Quad Receiver
- (4) Wireless Handheld Microphones (HYBRID-QUAD-H ONLY)
- (2) Antennas
- Power Adapter
- 1/4-to-1/4 Mic Cable
- (2) Rack Ears (1 Long & 1 Short)
- Mounting Plate
- (7) Phillips Head Screws

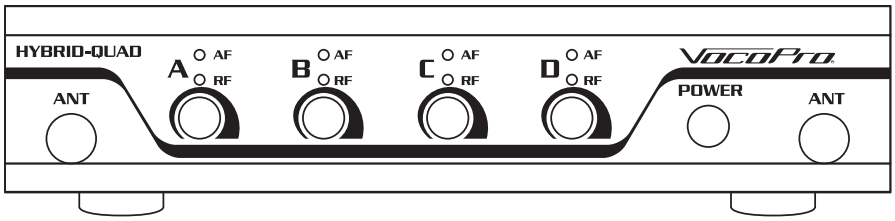

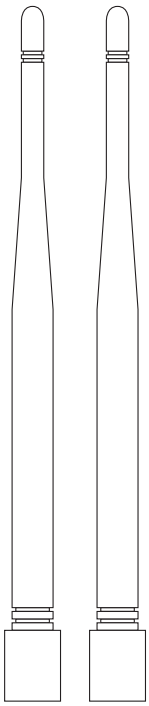

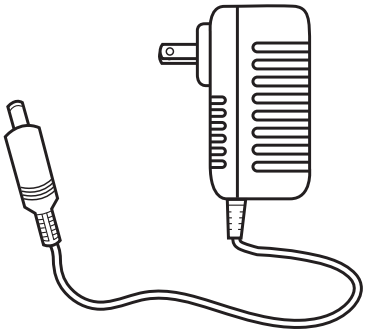

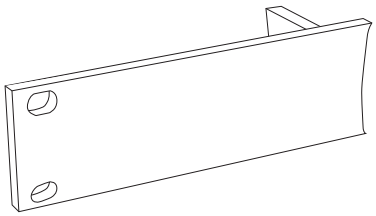

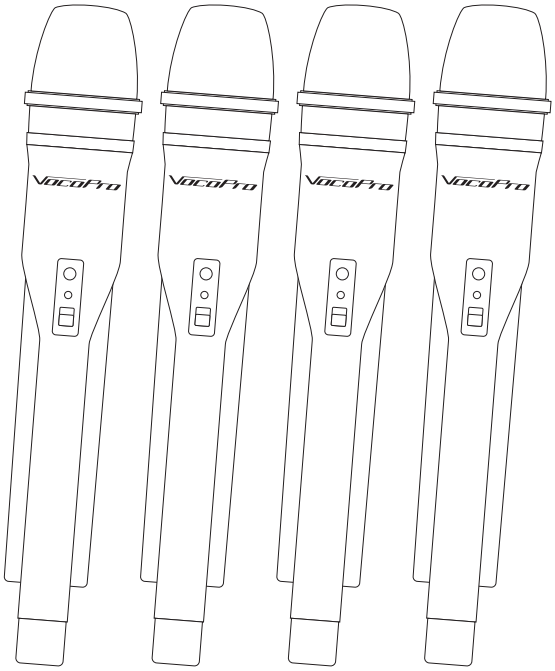

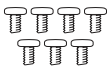

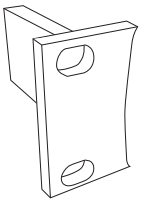

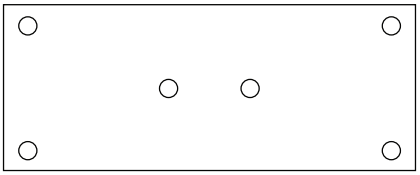

Getting Started

WHAT'S IN THE BOX: HYBRID QUAD-B

- Hybrid-Quad Receiver
- (4) Wireless Bodypacks (HYBRID-QUAD-B ONLY)
- (4) Headset Microphones (HYBRID-QUAD-B ONLY)
- (4) Lapel Microphones (HYBRID-QUAD-B ONLY)
- (2) Antennas
- Power Adapter
- 1/4-to-1/4 Mic Cable
- (2) Rack Ears (1 Long & 1 Short)
- Mounting Plate
- (7) Phillips Head Screws

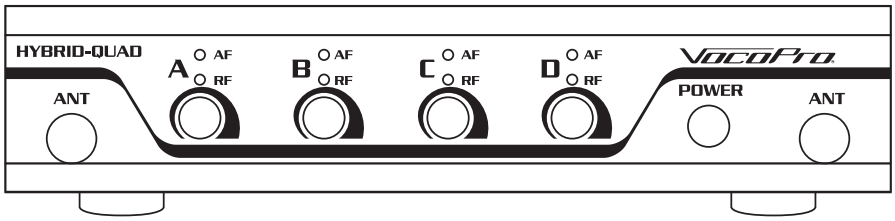

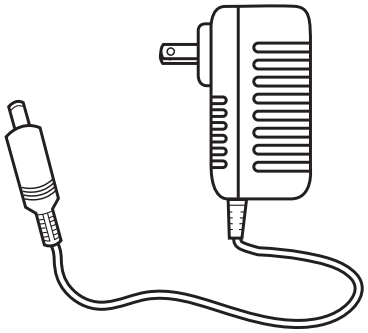

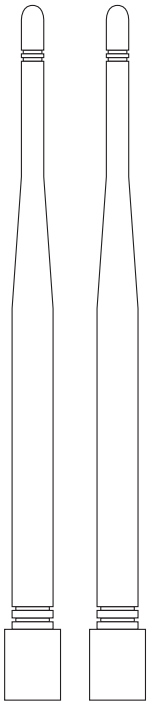

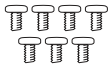

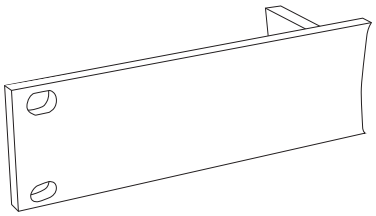

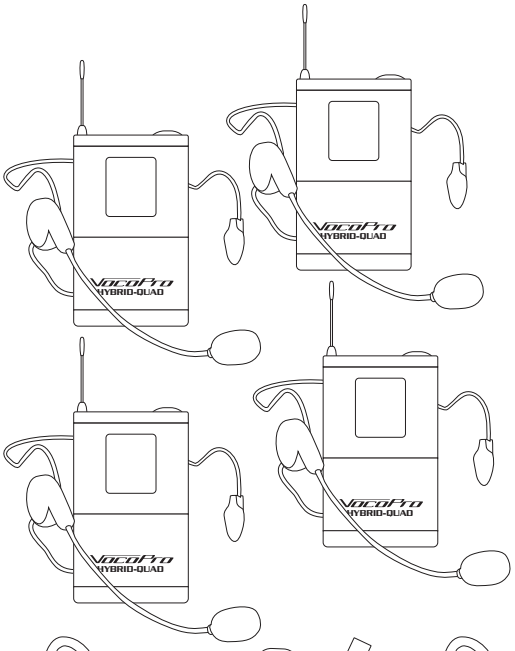

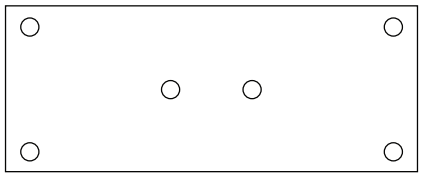

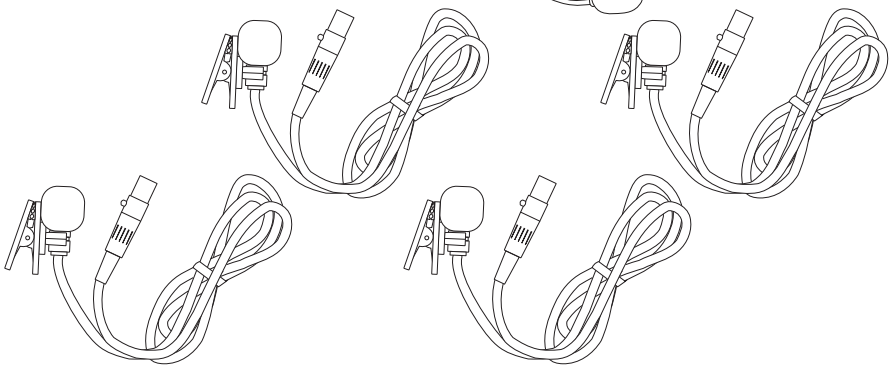

Descriptions and Functions

RECEIVER - FRONT PANEL

1. **ON/OFF Button** - Powers the receiver on/off.
2. **Mic Volume** - Adjusts the volume of their respective microphone channels.
3. **RF LEDs** - Registers Mic status: LED will shine when associated mic is powered on.
4. **AF LEDs** - Registers Mic transmission: LED will flash when audio is received.
5. **BNC Connectors** - Used to mount antennas.

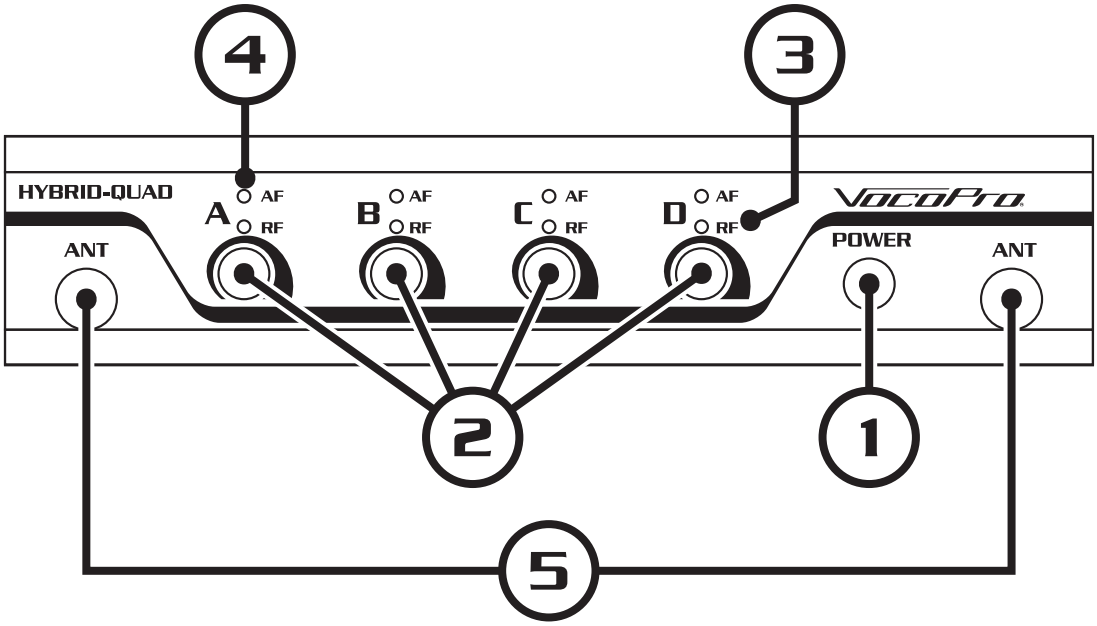

RECEIVER - BACK PANEL

1. **Unbalanced Mic Out** - Outputs all mic signals via the included 1/4" cable to a mixer or amplifier.
2. **Balanced Mic Out** - Outputs the respective mic channel audio via an XLR cable to a mixer or an amplifier.
3. **AC Input** - Connect AC power adapter here.

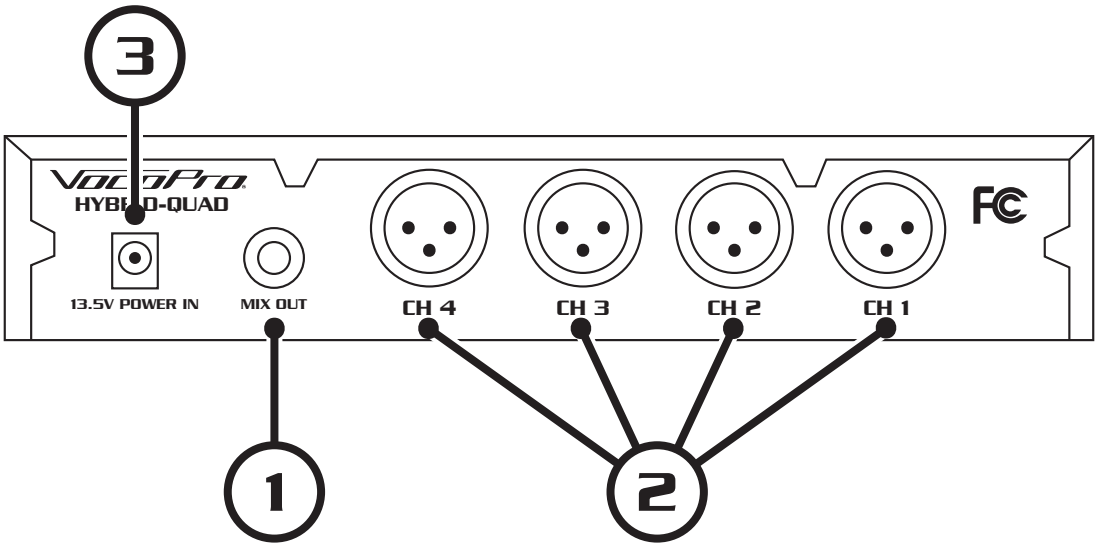

Descriptions and Functions

HANDHELD MICROPHONE - HYBRID-QUAD-H ONLY

1. **Mic Head** - Picks up vocals.

Note: Please hold within 5-6 inches of your mouth for best sound.

2. **Mic ON/OFF Switch** - Powers microphone ON/OFF.
3. **Mic Battery LED** - Indicates battery status.

Note: When powered on, the LED will flash once and go out. When battery life is low, LED will flash continuously.

4. **Battery Compartment** - Insert two (2x) AA batteries to provide power.

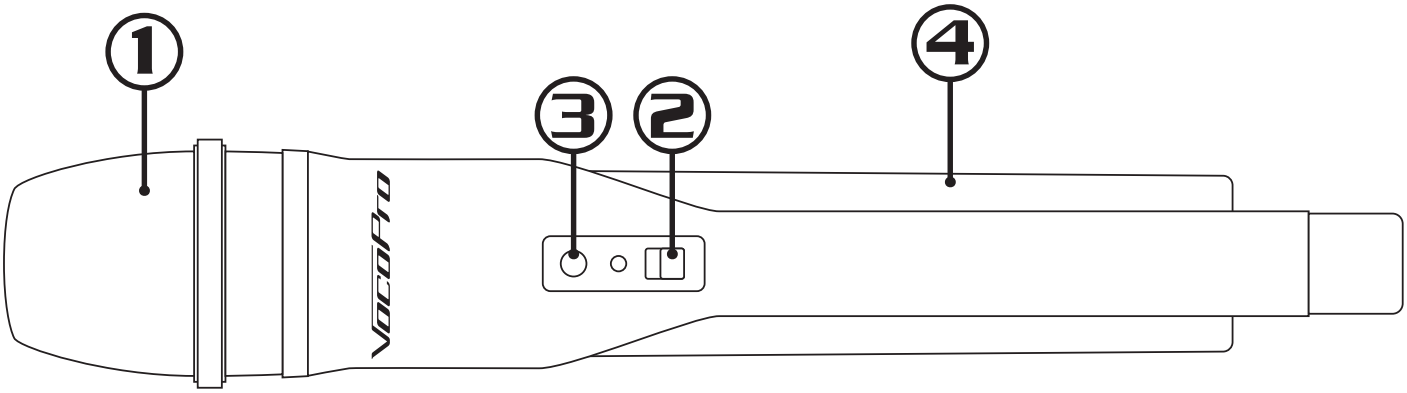

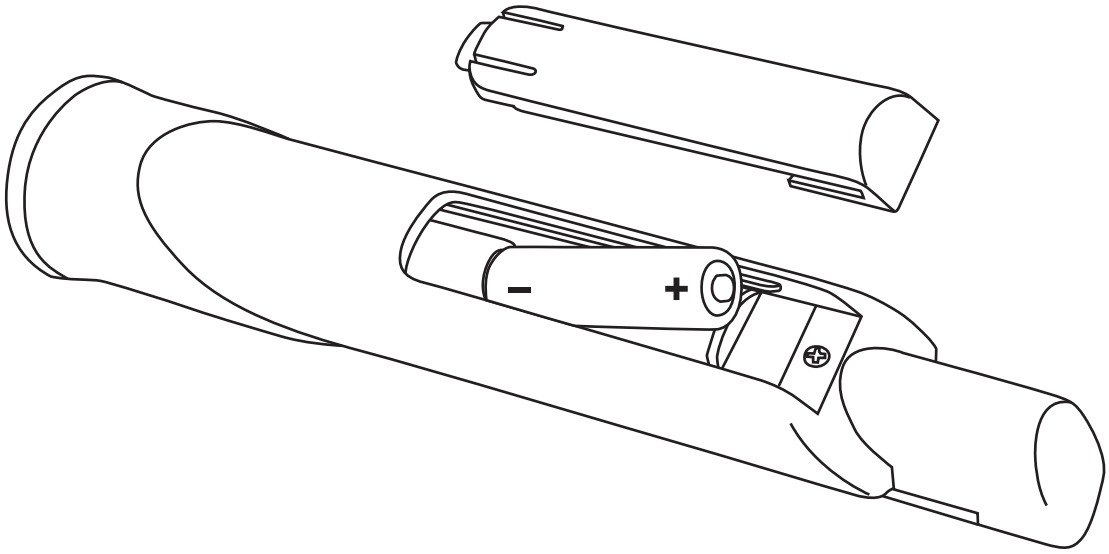

Descriptions and Functions

BODYPACK HEADSET MICROPHONES - HYBRID-QUAD-B ONLY

1. **Antenna** - Transmits audio to receiver.
2. **ON/OFF** - Powers bodypack ON/OFF.
3. **Power LED** - Indicates battery level.
   a.) Solid Green LED - Battery level is healthy and good to use.
   b.) Blinking Red LED - Batteries are low and require changing soon.
4. **Mini-XLR Jack** - Connect headset and lavalier microphone cables here.
5. **Gain** - Used to alter the overall volume output of the bodypack.

Note: Gain alters volume output of bodypack only; it is in addition to the volume knob located on the receiver.

6. **Battery Compartment** - Insert two (2) AA batteries.

Note: Rechargeable batteries are ok to use with this bodypack. Ensure rechargeable batteries are recharged in their appropriate charger to avoid damage to the bodypack.

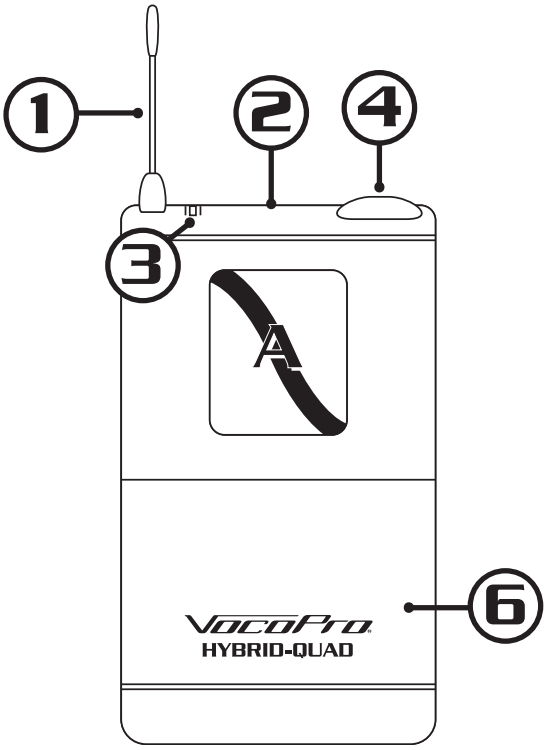

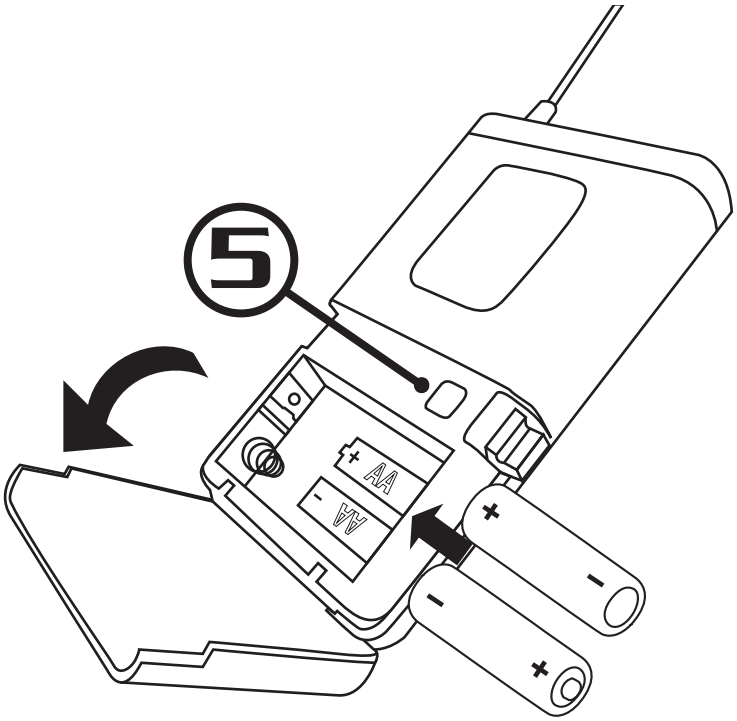

Getting Connected

TO CONNECT TO A MIXER

UNBALANCED 1/4"

1. Connect unbalanced 1/4" cable (included) to the unbalanced output from the Hybrid-Quad receiver.
2. Connect the other end of the 1/4" cable to a microphone input channel on a mixer/amplifier.

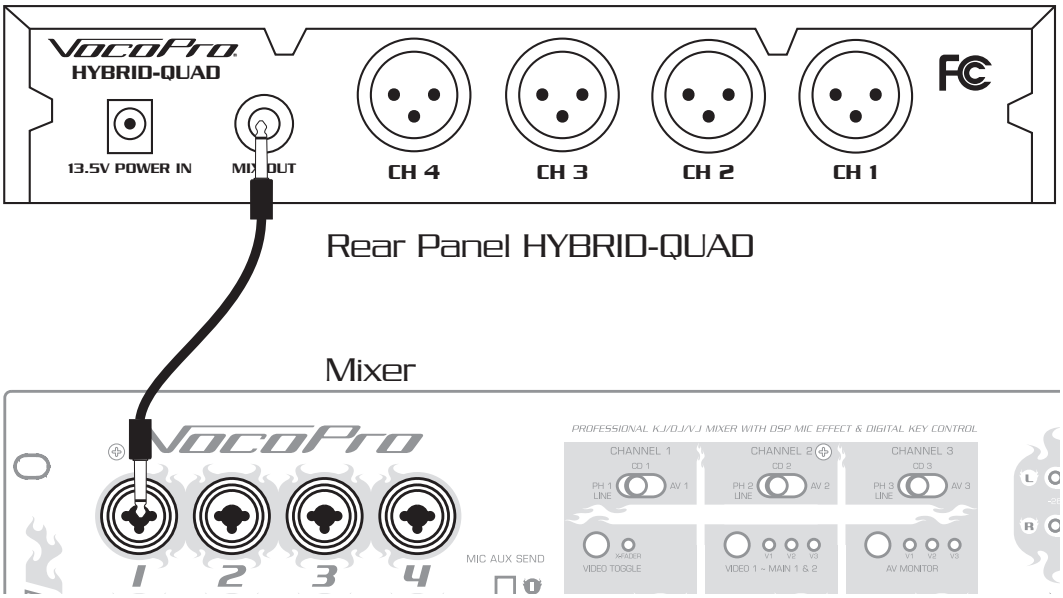

BALANCED XLR (OPTIONAL)

1. Connect 4 balanced XLR cables (not included) to the balanced outputs of the Hybrid-Quad receiver.
2. Connect each end of the XLR cables into individual microphone input jacks on a mixer/amplifier to be used (ex. Mic 1, Mic 2, Mic 3, Mic 4).

Note: Example illustrated is for clarity only. For ease of operation, attach the channel 1 output to the channel 1 input, channel 2 output to the channel 2 input, channel 3 output to the channel 3 input, and the channel 4 output to the channel 4 input on a mixer.

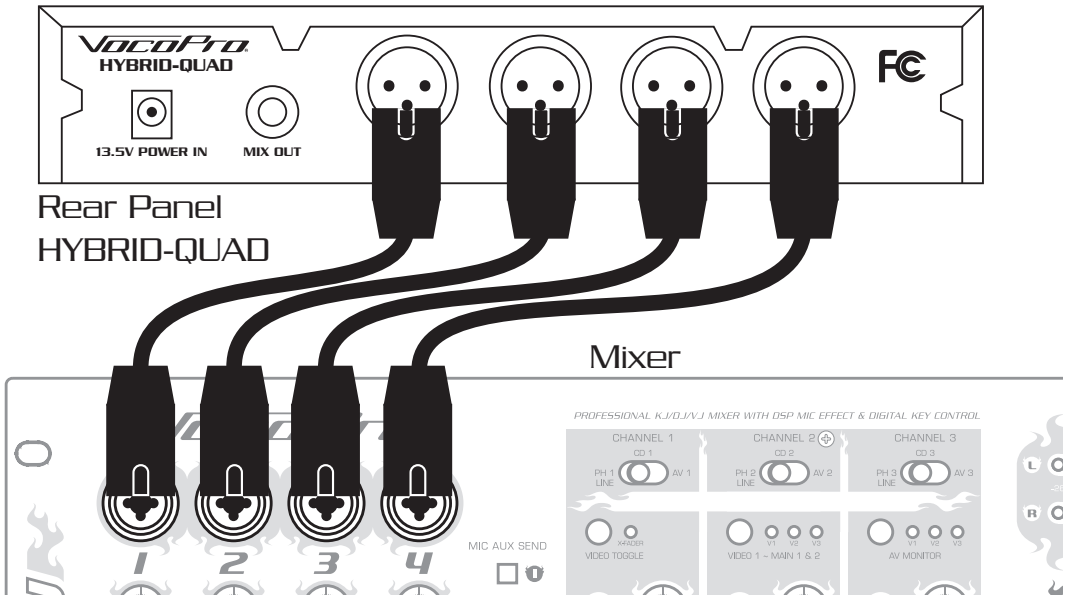

Attaching the Rack Mounts

ATTACHING THE RACK MOUNTS

The Hybrid-Quad is packaged with the rack mounts to attach them inside a standard 19" case. The mounts allow for a single Hybrid-Quad receiver to be installed, or allow up to two to be racked together.

INSTALLING ONE RECEIVER

1. Identify the small and large rack mounts included with the system
2. Screw the mounts into to the side of the receiver.
   - Small and large can be installed on either side.
3. Slide whole assembly into a 19" case and secure with screws.

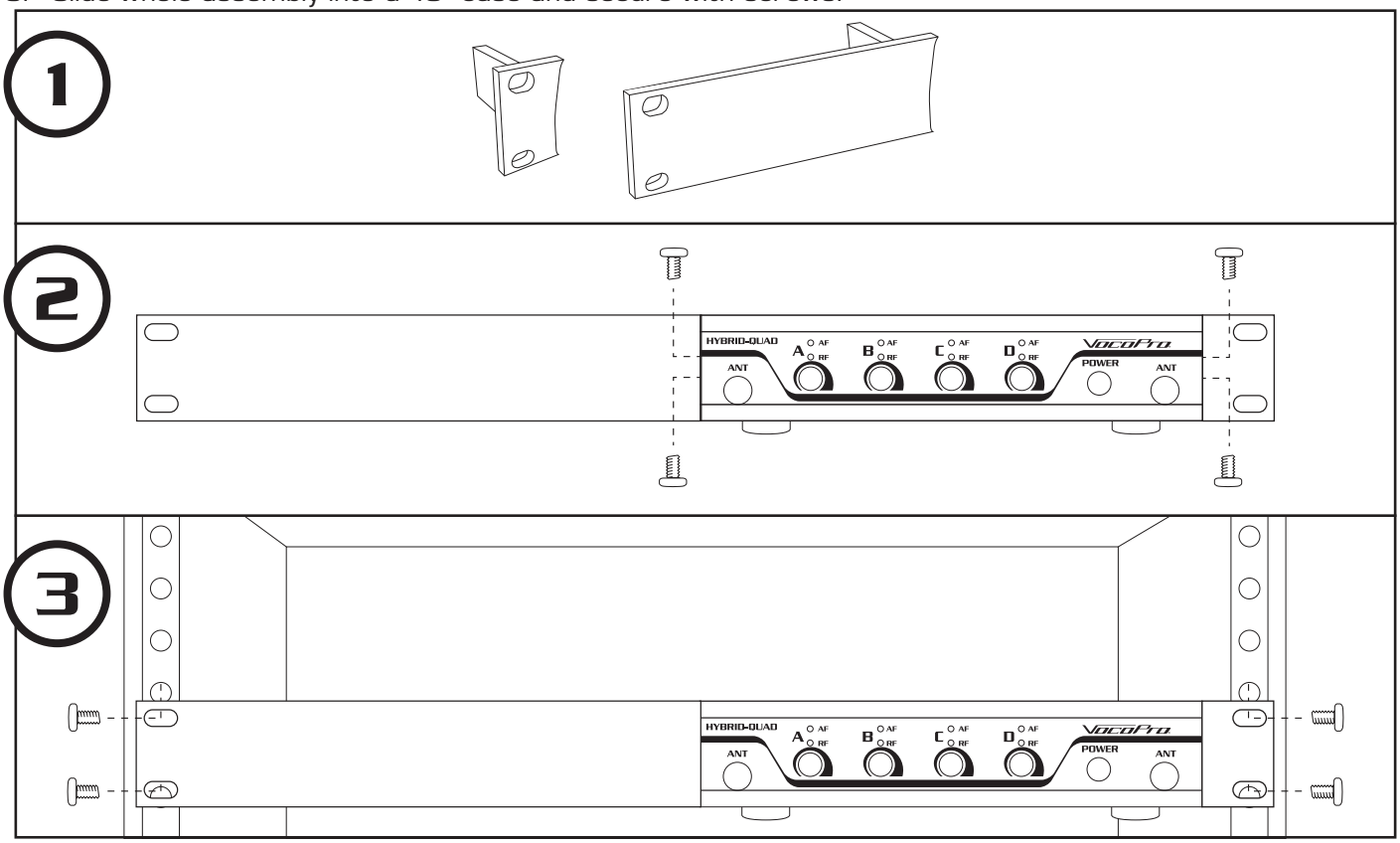

Attaching the Rack Mounts

INSTALLING TWO RECEIVERS

1. Identify the two small mounts and one metal plate included with both systems
2. Fix the metal plate onto the bottom of both receivers, as shown.
   - Make sure three screws are used to mount the plate to the bottom of each receiver.
3. Screw the two small mounts on either side of the two receivers.
4. Slide the entire assembly into a 19" case and secure with screws.

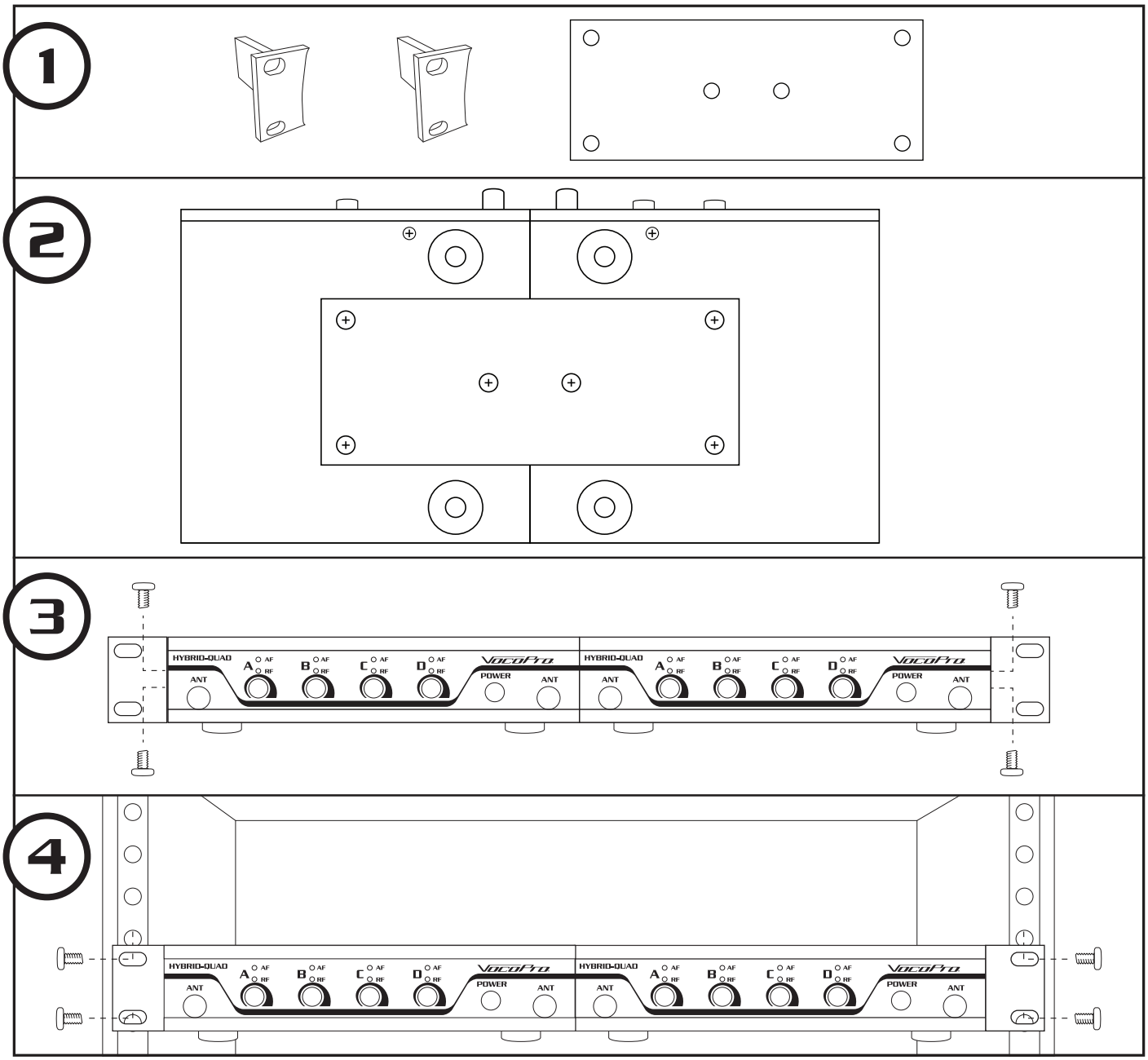

Commonly Asked Questions

Q. What do I do if my mics are cutting in and out?
A. Make sure both antennas are firmly attached to their posts.
A. Keep the receiver away from fluorescent lights.
A. Make sure microphones are being used within the operational range.
A. Ensure batteries are not depleted.

Q. There's a thumping noise coming through the speakers, what is it?
A. This typically occurs when the batteries are low.
A. Less likely, it may be the power supply not providing the correct power. Try a suitable replacement adapter with same values to confirm.
A. If problem persists, please call VocoPro at 800-678-5348 for further instructions.

Q. The lights on the receiver are flashing off and on continuously, what's going on?
A. Ensure the correct power supply is used with the Hybrid-Quad.
A. Inspect power supply cable for frayed wired or loose connections.
A. Find a suitable replacement for the original power supply; contact VocoPro for factory original parts at 800-678-5348.

FCC Warning

This device complies with Part 15 of the FCC Rules. Operation is subject to the following two conditions:
(1) This device may not cause harmful interference, and (2) this device must accept any interference received, including interference that may cause undesired operation.

NOTE 1: Any changes or modifications to this unit not expressly approved by the party responsible for compliance could void the user's authority to operate the equipment.