VocoPro®

PROFESSIONAL VOCAL SYSTEMS™

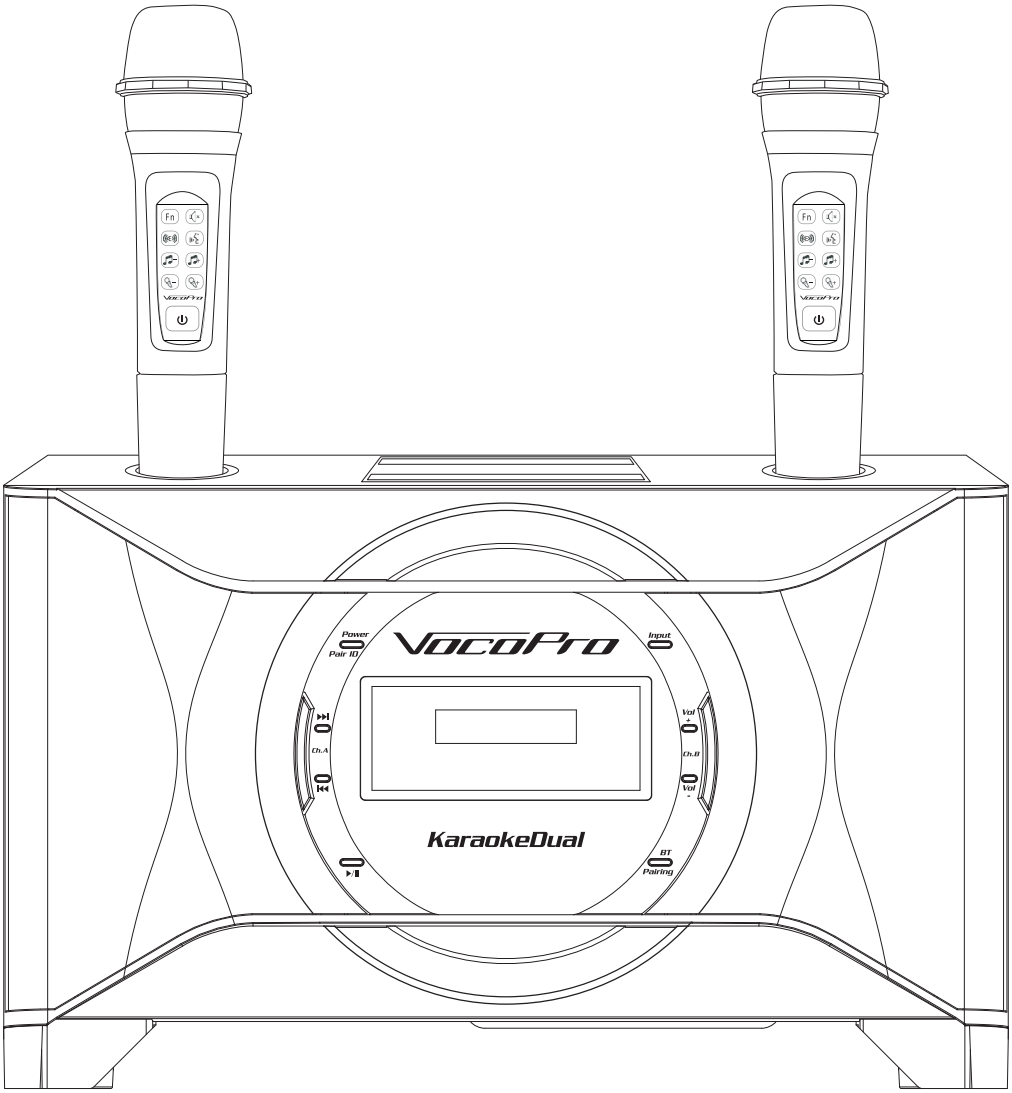

KaraokeDual

All-In-One Bluetooth Karaoke System with Optical Input and Vocal Eliminator

owner's manual

Table of Contents

Safety Instructions 4
FCC Information 5
Welcome. 6
Listening for a Lifetime 7
Getting Started 8
Getting Connected 9
Descriptions and Functions 11
Pairing the Microphones 13
Commonly Asked Questions 14

Safety Instructions

CAUTION
RISK OF SHOCK

CAUTION: To reduce the risk of electric shock, do not remove cover (or back). No user-serviceable parts inside. Only refer servicing to qualified service personnel.

Explanation of Graphical Symbols

The lightning flash & arrowhead symbol, within an equilateral triangle, is intended to alert you to the presence of danger.

The exclamation point within an equilateral triangle is intended to alert you to the presence of important operating and servicing instructions.

WARNING
To reduce the risk of fire or electric shock, do not expose this unit to rain or moisture.

1. **Read Instructions** - All the safety and operating instructions should be read before the appliance is operated.

2. **Retain Instructions** - The safety and operating instructions should be retained for future reference.

3. **Heed Warnings** - All warnings on the appliance and in the operating instructions should be adhered to.

4. **Follow Instructions** - All operating and use instructions should be followed.

5. **Attachments** - Do not use attachments not recommended by the product manufacturer as they may cause hazards.

6. **Water and Moisture** - Do not use this unit near water. For example, near a bathtub or in a wet basement and the like.

7. **Carts and Stands** - The appliance should be used only with a cart or stand that is recommended by the manufacturer.

7 A. An appliance and cart combination should be moved with care. Quick stops, excessive force, and uneven surfaces may cause an overturn.

8. **Ventilation** - The appliance should be situated so its location does not interfere with its proper ventilation. For example, the appliance should not be situated on a bed, sofa, rug, or similar surface that may block the ventilation slots.

9. **Heat** - The appliance should be situated away from heat sources such as radiators, heat registers, stoves, or other appliances (including amplifiers) that produce heat.

10. **Power Sources** - The appliance should be connected to a power supply only of the type described in the operating instructions or as marked on the appliance.

11. **Grounding or Polarization** - Precautions should be taken so that the grounding or polarization means of an appliance is not defeated.

12. **Power-Cord Protection** - Power-supply cords should be routed so that they are not likely to be walked on or pinched by items placed upon or against them, paying particular attention to cords at plugs, convenience receptacles, and the point where they exit from the appliance.

13. **Cleaning** - Unplug this unit from the wall outlet before cleaning. Do not use liquid cleaners or aerosol cleaners. Use a damp cloth for cleaning.

14. **Power lines** - An outdoor antenna should be located away from power lines.

15. **Nonuse Periods** - The power cord of the appliance should be unplugged from the outlet when left unused for a long period of time.

16. **Object and Liquid Entry** - Care should be taken so that objects do not fall and liquids are not spilled into the enclosure through openings.

17. **Damage Requiring Service** - The appliance should be serviced by qualified service personnel when:

A. The power supply cord or plug has been damaged; or
B. Objects have fallen into the appliance; or
C. The appliance has been exposed to rain; or
D. The appliance does not appear to operate normally or exhibits a marked change in performance; or
E. The appliance has been dropped, or the enclosure damaged.

18. **Servicing** - The user should not attempt to service the appliance beyond that described in the operating instructions. All other servicing should be referred to qualified service personnel.

Note:
To CATV system installer's (U.S.A.): This reminder is provided to call the CATV system installer's attention to Article 820-40 of the NEC that provides guidelines for proper grounding and, in particular, specifies that the cable ground shall be connected as close to the point of cable entry as practical.

FCC Information

1. IMPORTANT NOTICE: DO NOT MODIFY THIS UNIT!: This product, when installed as indicated in the instructions contained in this manual, meets FCC requirements. Modifications not expressly approved by Vocopro may void your authority, granted by the FCC, to use this product.

2. IMPORTANT: When connecting this product to accessories and/or another product use only high quality shielded cables. Cable(s) supplied with this product MUST be used. Follow all installation instructions. Failure to follow instructions could void your FCC authorization to use this product in the U.S.A.

If these corrective measures do not produce satisfactory results, please contact your local retailer authorized to distribute Vocopro products. If you can not locate the appropriate retailer, please contact Vocopro, 1728 Curtiss Court, La Verne, CA 91750.

CAUTION
The apparatus is not disconnected from the AC power source so long as it is connected to the wall outlet, even if the apparatus itself is turned off. To fully ensure that the apparatus is indeed fully void of residual power, leave unit disconnected from the AC outlet for at least fifteen seconds.

CALIFORNIA PROP 65 WARNING
WARNING: This product contains chemicals known to the state of California to cause cancer and birth defects or other reproductive harm.
(California law requires this warning to be given to customers in the State of California.)
For more information: www.vocopro.com/prop65

CAUTION:
READ THIS BEFORE OPERATING YOUR UNIT

1. To ensure the finest performance, please read this manual carefully. Keep it in a safe place for future reference.
2. Install your unit in a cool, dry, clean place - away from windows, heat sources, and too much vibration, dust, moisture or cold. Avoid sources of hum (transformers, v motors). To prevent fire or electrical shock, do not expose to rain and water.
3. Do not operate the unit upside-down.
4. Never open the cabinet. If a foreign object drops into the set, contact your dealer.
5. Place the unit in a location with adequate air circulation. Do not interfere with its proper ventilation; this will cause the internal temperature to rise and may result in a failure.
6. Do not use force on switches, knobs or cords. When moving the unit, first turn the unit off. Then gently disconnect the power plug and the cords connecting to other equipment. Never pull the cord itself.
7. Do not attempt to clean the unit with chemical solvents: this might damage the finish. Use a clean, dry cloth.
8. Be sure to read the "Troubleshooting" section on common operating errors before concluding that your unit is faulty.
9. This unit consumes a fair amount of power even when the power switch is turned off. We recommend that you unplug the power cord from the wall outlet if the unit is not going to be used for a long time. This will save electricity and help prevent fire hazards. To disconnect the cord, pull it out by grasping the plug. Never pull the cord itself.
10. To prevent lightning damage, pull out the power cord and remove the antenna cable during an electrical storm.
11. The general digital signals may interfere with other equipment such as tuners or receivers. Move the system farther away from such equipment if interference is observed.

NOTE:
Please check the copyright laws in your country before recording from records, compact discs, radio, etc. Recording of copyrighted material may infringe copyright laws.

Voltage Selector (General Model Only)
Be sure to position the voltage selector to match the voltage of your local power lines before installing the unit.

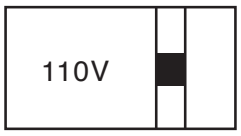

Welcome

And thank you for purchasing the **KaraokeDual** from VocoPro, your ultimate choice in Karaoke entertainment! With years of experience in the music entertainment business, VocoPro is a leading manufacturer of Karaoke equipment, and has been providing patrons of bars, churches, schools, clubs and individual consumers the opportunity to sound like a star with full-scale club models, in-home systems and mobile units. All our products offer solid performance and sound reliability, and to reinforce our commitment to customer satisfaction, we have customer service and technical support professionals ready to assist you with your needs. We have provided some contact information for you below.

VocoPro
1728 Curtiss Court
La Verne, CA 91750
Toll Free: 800-678-5348
TEL: 909-593-8893
FAX: 909-593-8890

VocoPro Company Email Directory

Customer Service & General Information
info@vocopro.com

Tech Support
techsupport@vocopro.com

Remember Our Website
Be sure to visit the VocoPro website **www.vocopro.com** for the latest information on new products, packages and promos. And while you're there don't forget to check out our Club VocoPro for Karaoke news and events, chat rooms, club directories and even a KJ Service directory!

We look forward to hearing you sound like a PRO, with VocoPro, the singer's ultimate choice.

FOR YOUR RECORDS

Please record the model number and serial number below, for easy reference, in case of loss or theft. These numbers are located on the rear panel of the unit. Space is also provided for other relevant information

Model Number _____

Serial Number _____

Date of Purchase _____

Place of Purchase _____

Listening for a Lifetime

Selecting fine audio equipment such as the unit you've just purchased is only the start of your musical enjoyment. Now it's time to consider how you can maximize the fun and excitement your equipment offers. VocoPro and the Electronic Industries Association's Consumer Electronics Group want you to get the most out of your equipment by playing it at a safe level. One that lets the sound come through loud and clear without annoying blaring or distortion and, most importantly, without affecting your sensitive hearing.

Sound can be deceiving. Over time your hearing "comfort level" adapts to a higher volume of sound. So what sounds "normal" can actually be loud and harmful to your hearing. Guard against this by setting your equipment at a safe level BEFORE your hearing adapts.

To establish a safe level:
- Start your volume control at a low setting.
- Slowly increase the sound until you can hear it comfortably and clearly, and without distortion.

Once you have established a comfortable sound level:
- Set the dial and leave it there.
- Pay attention to the different levels in various recordings.

Taking a minute to do this now will help to prevent hearing damage or loss in the future. After all, we want you listening for a lifetime.

Used wisely, your new sound equipment will provide a lifetime of fun and enjoyment. Since hearing damage from loud noise is often undetectable until it is too late, this manufacturer and the Electronic Industries Association's Consumer Electronics Group recommend you avoid prolonged exposure to excessive noise. This list of sound levels is included for your protection.

Some common decibel ranges:

Level	Example
30	Quiet library, Soft whispers
40	Living room, Refrigerator, Bedroom away from traffic
50	Light traffic, Normal Conversation
60	Air Conditioner at 20 ft., Sewing machine
70	Vacuum cleaner, Hair dryer, Noisy Restaurant
80	Average city traffic, Garbage disposals, Alarm clock at 2 ft.

The following noises can be dangerous under constant exposure:

Level	Example
90	Subway, Motorcycle, Truck traffic, Lawn Mower
100	Garbage truck, Chainsaw, Pneumatics drill
120	Rock band concert in front of speakers
140	Gunshot blast, Jet plane
180	Rocket launching pad

-Information courtesy of the Deafness Research Foundation

Getting Started

WHAT'S IN THE BOX

- KaraokeDual
- Wireless Microphones (2)
- Power Adapter
- Optical Cable
- Stereo Cable (1/8"-to-1/8")

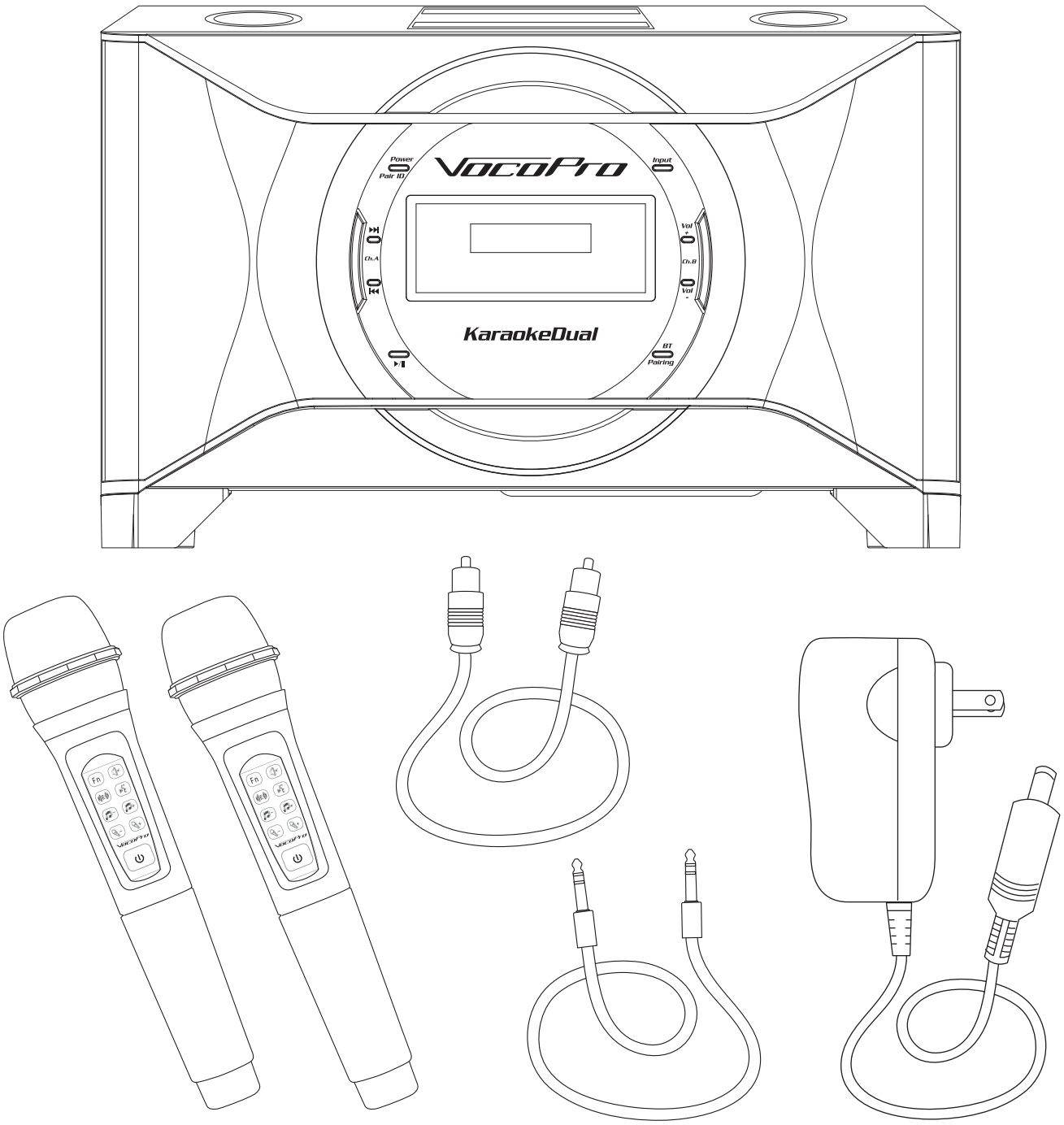

Getting Connected

The KaraokeDual is a self-contained sound system. It has an amplifier built in; it requires only power and a music signal. The music input signal can be from a Bluetooth connection, a digital Optical cable or a Stereo 1/8”-to-1/8” cable.

CONNECTING POWER

Plug the included power cable into the AC INPUT jack located on the right side of the back panel on the KaraokeDual.

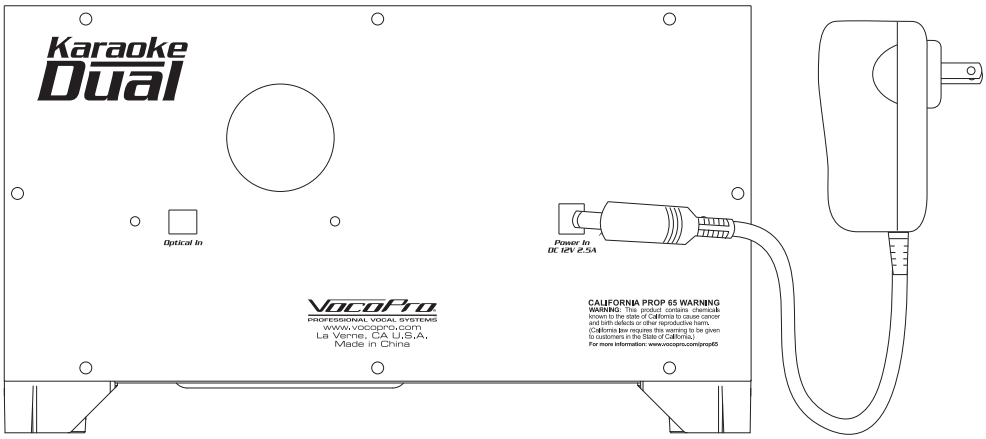

CONNECTING MUSIC INPUT SIGNAL

USING THE BLUETOOTH

- Press the Input Select button toggle to the Bluetooth Input.
- Search for available Bluetooth devices on your music source.
- Select KaraokeDual to connect.
- A blue LED will turn on in the display once a connection is made.

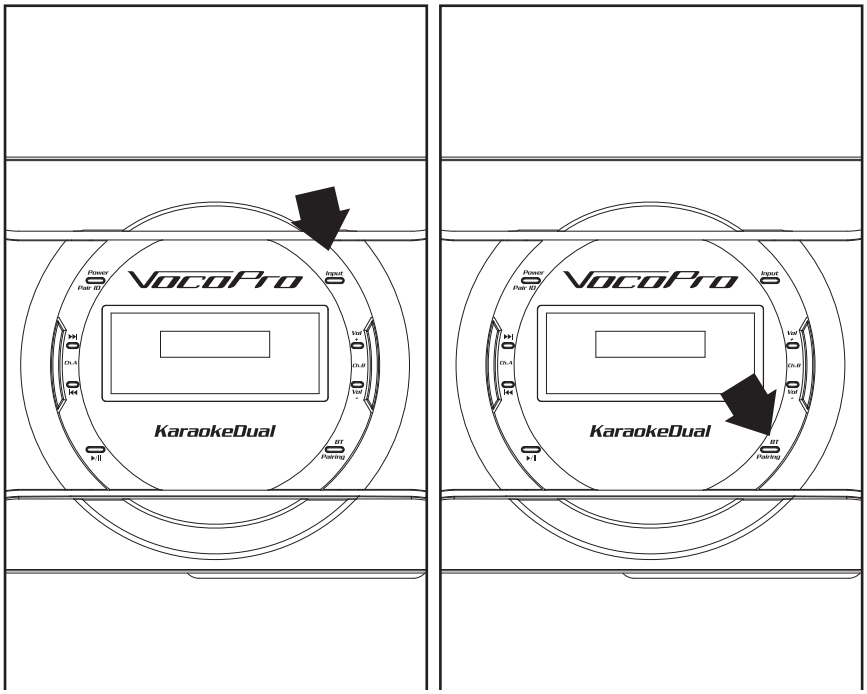

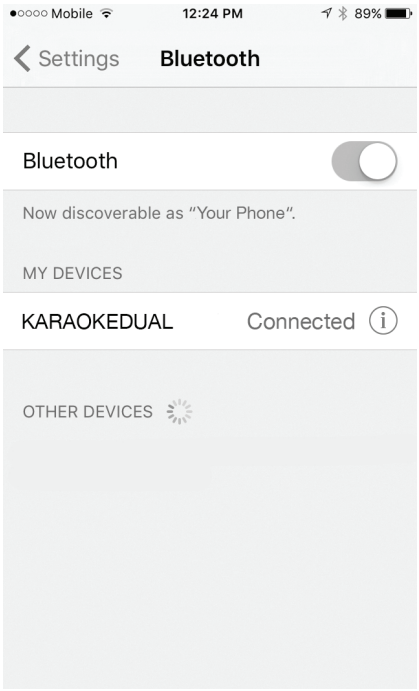

Example Shown. Results will vary per Phone/Tablet/etc.

Getting Connected

USING THE 1/8" LINE INPUT

- Press the Input Select button to toggle to the Line Input.
- Connect the included Stereo 1/8"-to-1/8" cable from the 1/8" Headphone Output on the music source to the 1/8" Line Input located on the back panel of the KaraokeDual.

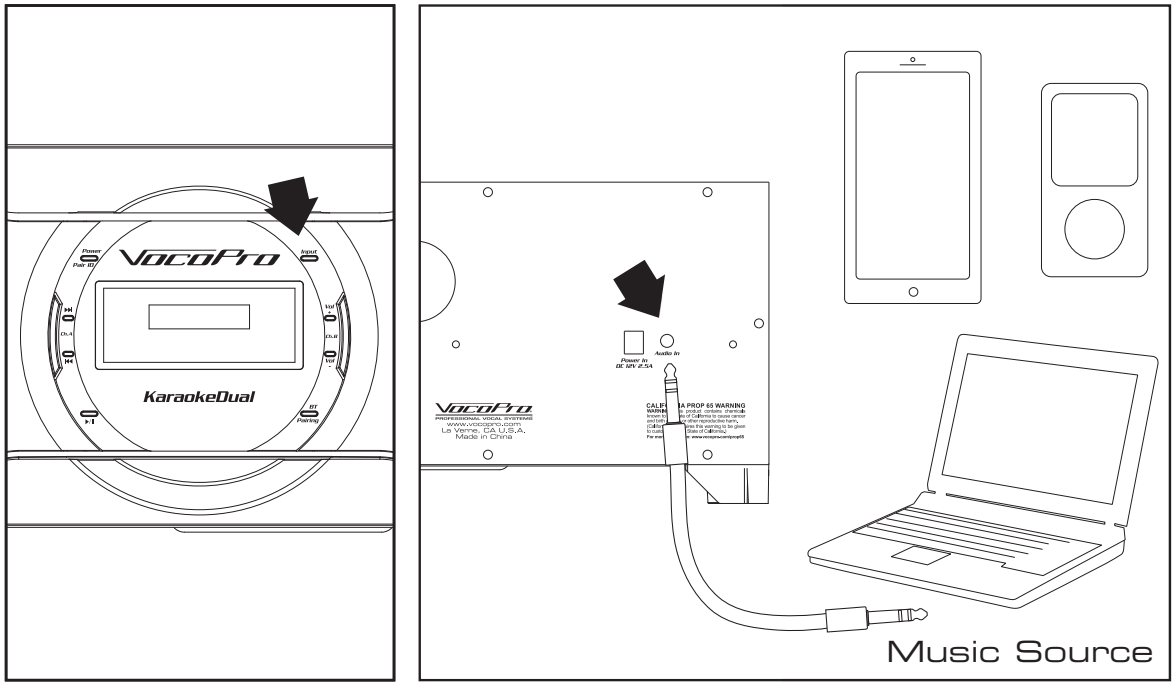

USING THE OPTICAL INPUT

- Press the Input Select button to toggle to the Optical Input.
- Connect the included optical cable from the Optical Out on the music source to the Optical In on the back panel of the KaraokeDual.

***WARNING: DO NOT** look directly into the Red Laser emanating from the digital optical cable.*

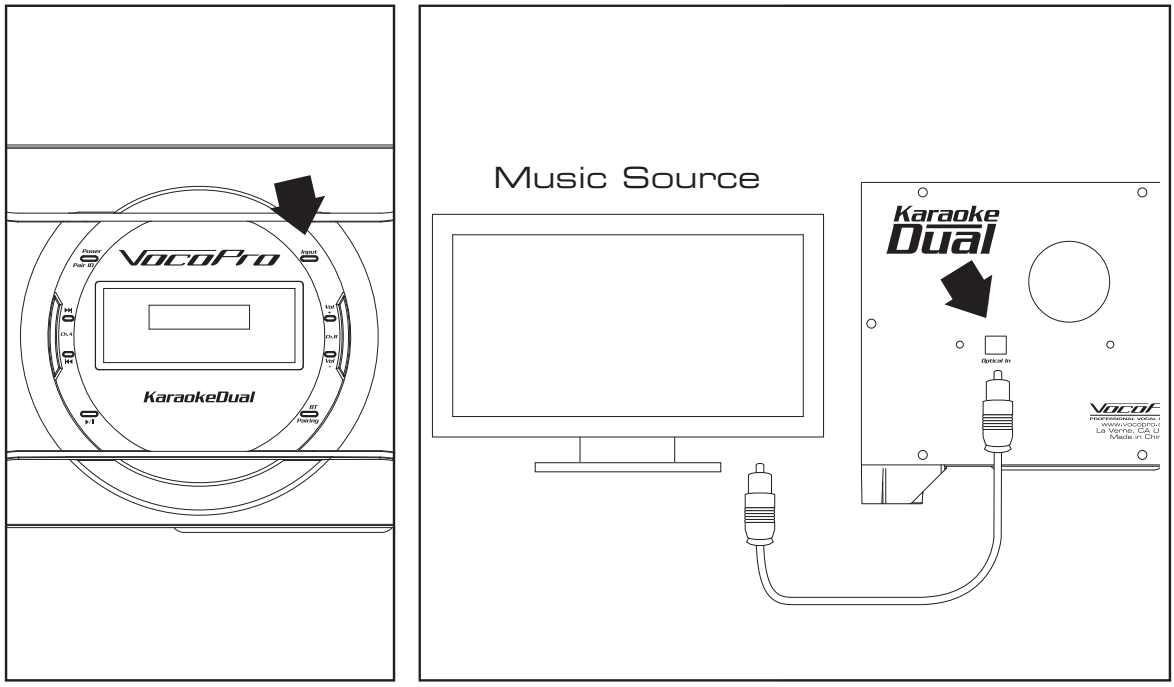

Descriptions and Functions

FRONT PANEL

1. **Power/Pair ID** – This button toggles power OFF/ON.
   - Press and hold for 3 seconds to toggle the Microphone Pairing Mode. See Pairing The Microphones for more info.
2. **Next –** This button skips the next track*.
3. **Previous –** This button skips to the previous track*.
4. **Play/Pause –** This button plays and pauses the current track.*

Note: *Only applies to Bluetooth. See Getting Connected for more details.

5. **Input Select –** This button toggles through the available inputs:
   - Bluetooth
   - Optical
   - Line
6. **Music Volume +/- –** These buttons vary the music input volume from 0-15.
7. **BT Pairing –** This button activates the Bluetooth pairing mode. Refer to Getting Connected for more details.
8. **Microphone Status LEDs –** These lights indicate the microphone connection status:
   - **Solid LED –** This means the microphones are connected.
   - **No LED –** This means the microphones are not connected.
   - **Flashing LED** – This means the Microphone Pairing Mode is activated. See Getting Connected for more details.
9. **Bluetooth Status LED –** This light indicates the Bluetooth connection status:
   - **Solid LED –** This means the Bluetooth is connected.
   - **No LED –** This means there is no Bluetooth signal connected.

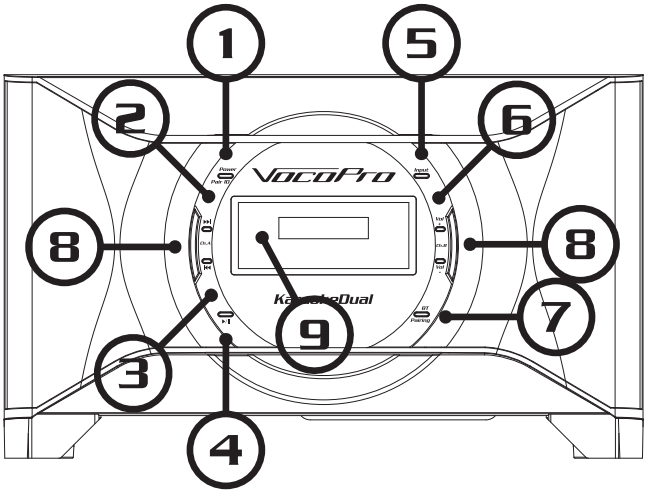

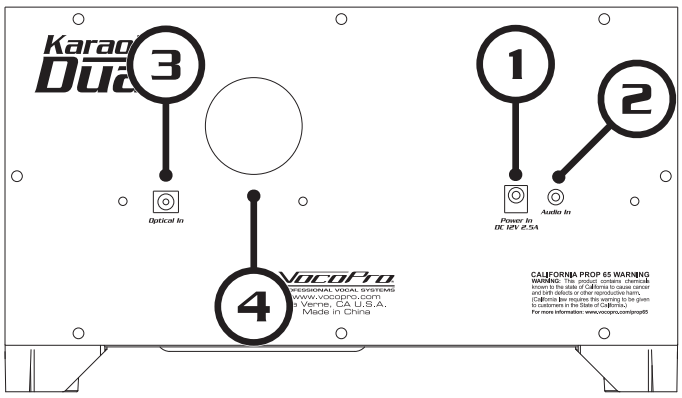

BACK PANEL

1. **AC In –** This is where the AC power adapter is plugged in.
2. **1/8" Line Input –** This is where the Stereo 1/8"-1/8" cable is plugged in.
3. **Optical Input –** This is where the digital Optical cable is plugged in.
4. **Bass Port –** Do not cover. This enhances the bass response of the speaker cabinet.

Descriptions and Functions

MICROPHONE

1. **Power/Lock –** This button toggles the Power OFF/ON.
   - Press and hold for 3 seconds to toggle the Microphone Lock.

   The LED has three color modes:
   - Green – This means the microphone is on and is connected.
   - Flashing Green – This means the microphone is on but not connected.
   - Yellow – This means the Microphone Lock is on.

Note: The Microphone Lock cannot be activated if the microphone is not paired.

2. **Fn –** This toggles between Left-mono, Right-mono, and the Vocal Eliminator.

   The display on the KaraokeDual will show:
   - 00 – Stereo
   - 01 – Left-mono
   - 02 – Right-mono
   - 03 – Vocal Eliminator
3. **Mute –** This toggles both Mic and Music audio OFF/ON.
4. **Echo –** This cycles through Echo levels 0-6.
5. **Microphone EQ –** This cycles through the EQ presets:

   The display on the KaraokeDual will show:
   - 01 – No alteration
   - 01 – Low-end (accentuates Bass frequencies)
   - 02 – Middle (accentuates Middle frequencies)
   - 03 – High-end (accentuates High frequencies)
6. **Music Volume +/- –** These raise and lower the Music Volume from 0-15.
7. **Mic Volume +/- –** These raise and lower the Microphone Volume from 1-15.

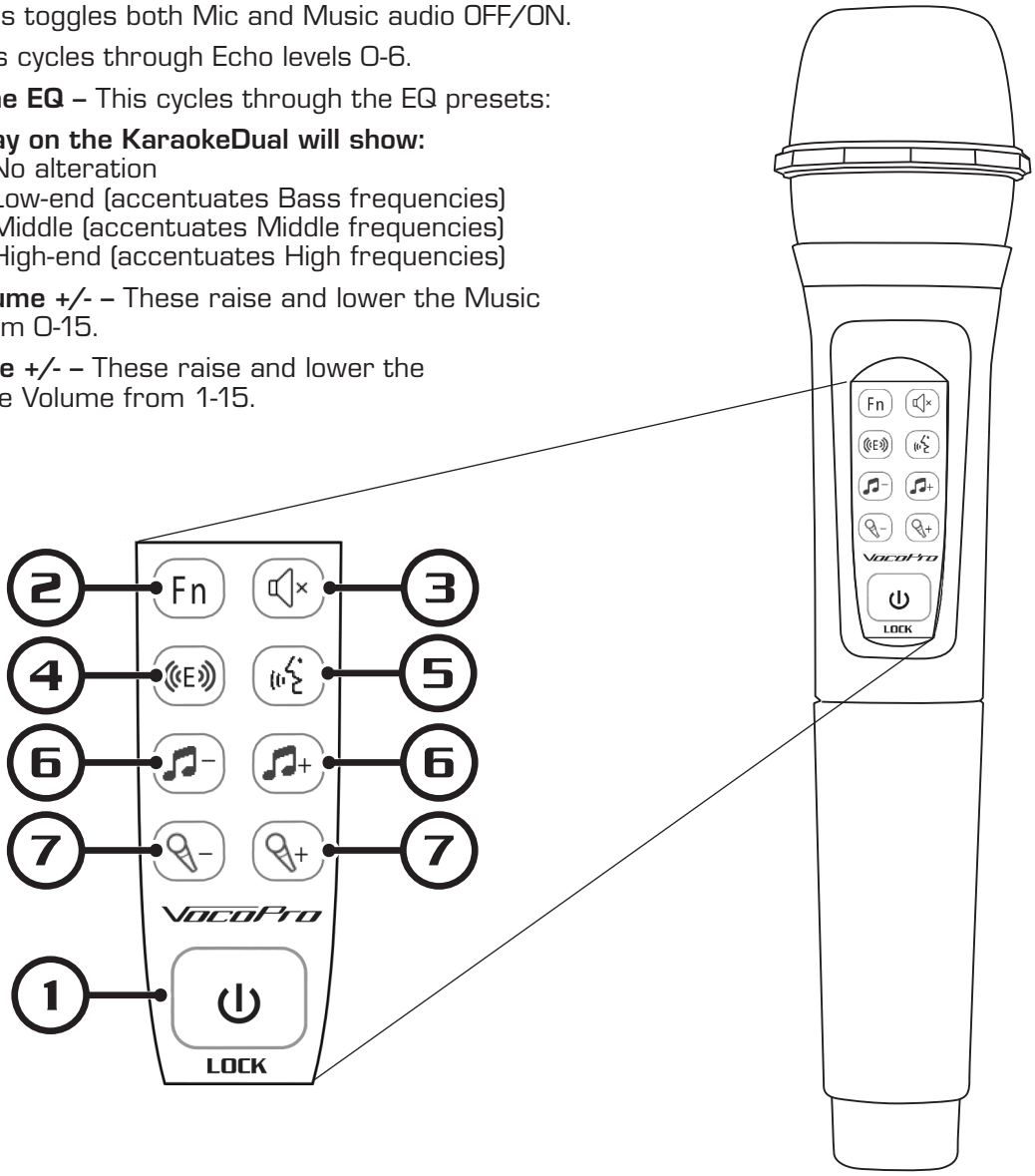

Pairing the Microphones

If the microphones experience signal loss or drop outs, the microphones should be resynced to the receiver. In doing so, the receiver will automatically change the operational frequency of each mic.
Follow the steps below to resync the microphones with a new frequency channel:

1. Power receiver on – Press power button once (1x)
2. Once the KaraokeDual is powered on, press and hold the Power/Pair ID button until Microphone Status LEDs are flashing.
3. When the Mic Status LEDs are flashing, power on either microphone.

Note: The channel indicator lights on the receiver will then flash and the receiver will power off. This is normal.

4. Power the receiver back on and check that one of Mic channel LEDs is solidly lit on the receiver; this indicates the microphone was paired successfully.
5. Repeat steps 2-4 for the second microphone.

Notes:

- ***When pairing, only one microphone can be paired at a time.***
- ***The receiver WILL shut off when it pairs with a microphone, this is normal.***
- ***The receiver will power off if the Power button is continued to be pressed down once the flashing LED has selected Mic.***

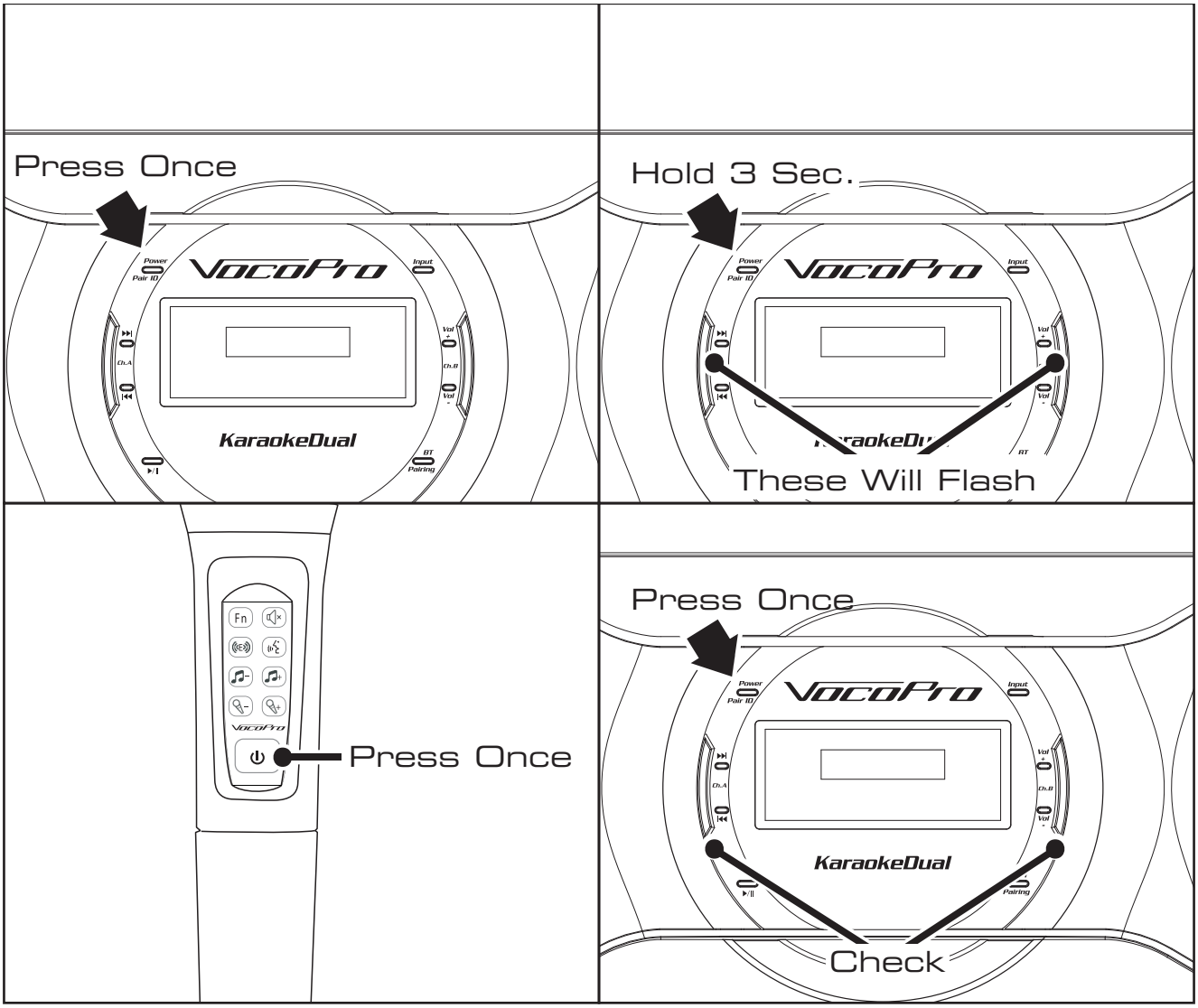

Commonly Asked Questions

What is PCM Audio?
- PCM stands for Pulse-Code Modulation and it is a direct digital representation of an analog signal. It means the digital signal does not contain any algorithm or implement compression.

Why do I hear a strange growling & buzzing noise through the Optical Input?
- The strange buzzing noise is what happens when a Dolby audio signal is fed into the KaraokeDual. The audio compression used by Dolby audio signals is incompatible with the KaraokeDual.
- Change the optical out settings on the TV from Dolby to PCM for correct audio.

What is the range of the microphones?
- The maximum range is approximately 40ft.

What is the operational frequency of the microphones?
- The microphones operate in the 2.4Ghz band.

What do I do if the microphones drop out?
- The first step is to change the frequency of the mics, refer to Pairing The Microphones for instructions how to do so.
- The second step would be to change the batteries and move the receiver away from any sources of RF signals like routers and cordless phones that operate in the 2.4Ghz band.
- If the problem persists, please call VocoPro at 800-678-5348.

I lost my original power supply, what can I do?
- Any standard computer USB jack will power the KaraokeDual. You can also use any power adapter rated at 5V DC.

What Bluetooth devices are compatible with the Karaoke-Dual?
- Any device that supports A2DP is compatible.
- A2DP means Advanced Audio Distribution Profile, it allows audio to be streamed over Bluetooth.
- If the device is a smartphone, tablet, or computer, it likely has A2DP enabled.

Do the playback control buttons (play, pause, next, and previous) work on the digital or stereo 1/8" inputs?
- No, the playback control buttons will work only with the Bluetooth connection, and only if your device supports AVRCP.
- AVRCP means Audio/Video Remote Control Profile, it allows devices to accept commands over Bluetooth.
- If the device is a smartphone, tablet, or computer, it likely has AVRCP enabled.

I'm missing some parts from my box. What do I do?
- Please call Vocopro regarding any missing or defective parts at 800-678-5348.

Notes

FCC Warning:

This equipment has been tested and found to comply with the limits for a Class B digital device, pursuant to part 15 of the FCC Rules. These limits are designed to provide reasonable protection against harmful interference in a residential installation. This equipment generates, uses and can radiate radio frequency energy and, if not installed and used in accordance with the instructions, may cause harmful interference to radio communications. However, there is no guarantee that interference will not occur in a particular installation. If this equipment does cause harmful interference to radio or television reception, which can be determined by turning the equipment off and on, the user is encouraged to try to correct the interference by one or more of the following measures:

o Reorient or relocate the receiving antenna.
o Increase the separation between the equipment and receiver.
o Connect the equipment into an outlet on a circuit different from that to which the receiver is connected.
o Consult the dealer or an experienced radio/TV technician for help.

Caution: Any changes or modi?cations to this device not explicitly approved by manufacturer could void your authority to operate this equipment.

This device complies with part 15 of the FCC Rules. Operation is subject to the following two conditions: (1) This device may not cause harmful interference, and (2) this device must accept any interference received, including interference that may cause undesired operation.

This equipment complies with FCC radiation exposure limits set forth for an uncontrolled environment. This equipment should be installed and operated with minimum distance 20cm between the radiator & your body.

KaraokeDual Owner's Manual
© VocoPro 2015
v1.0.1103
www.vocopro.com